Feb. 15, 1944. E. P. GRIME 2,341,542

VARIABLE HEIGHT JACK

Filed May 18, 1942

Fig. 1

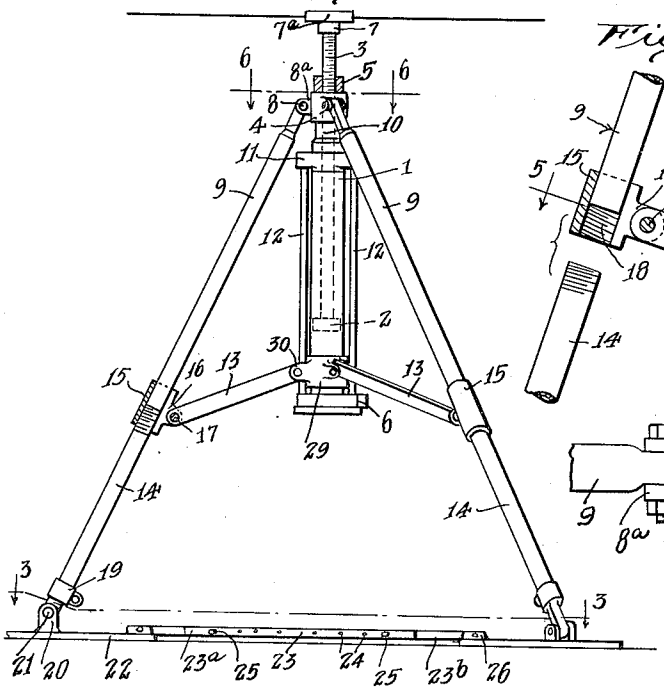

Fig. 4

Fig. 5

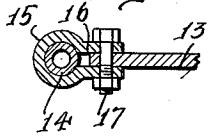

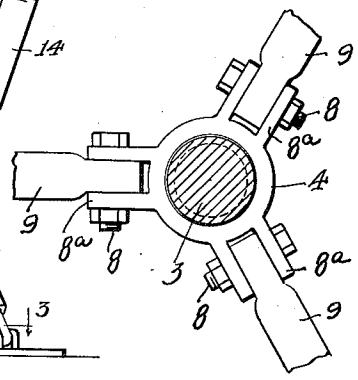

Fig. 6

Fig. 2

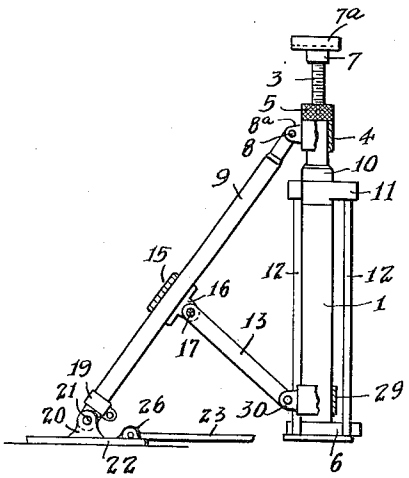

Fig. 3

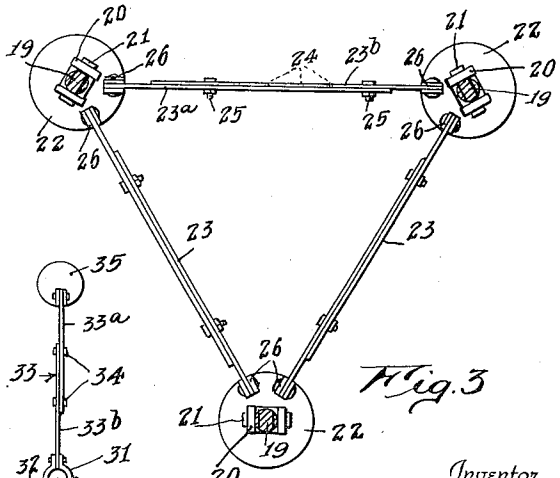

Fig. 7

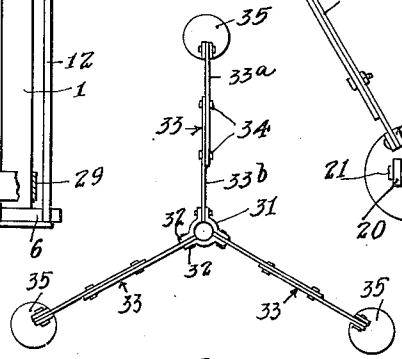

Inventor

Edward P. Grime

By Lyon & Lyon

Attorneys

Patented Feb. 15, 1944 2,341,542

UNITED STATES PATENT OFFICE

2,341,542

VARIABLE HEIGHT JACK

Edward P. Grime, Huntington Park, Calif., assignor to Malabar Machine Company, a copartnership composed of Edward P. Grime and W. F. Foy

Application May 18, 1942, Serial No. 443,339

6 Claims. (Cl. 254—93)

This invention relates to a jack or shore, and while the invention is capable of application in the construction of a jack or shore for any purpose, the invention is illustrated in the following specification and in the drawing, as applied to a type of jack or shore that is particularly useful either for lifting an aeroplane off the ground by means of two of these jacks applied to the under side of the wings on opposite sides of the fuselage, or else to operate as a shore applied in a similar manner to maintain such an airship in an upright position.

The servicing of an aeroplane requires, among other things, that the plane be raised from the ground in order to check or change wheels or tires, and to check, inspect and repair retractable and/or landing gear apparatus. In such service work it frequently happens that, while in an elevated position, the motor or motors will be operated. Such operation obviously exerts a forward or horizontal thrust against the supporting jack or shore. Moreover, a horizontal thrust occurs, also, not infrequently, while the plane is being supported on the jack, from strong winds or wind storms.

Specifications for aeroplane jacks, therefore, require that the jacks used for supporting aeroplanes, shall not only meet minimum load tests that develop vertical stresses in the structure, but also require that the frame of the jack shall have sufficient stability to resist the horizontal thrust developed by the propeller, or propellers, of the aeroplane when the motors are being run at a low speed as may be necessary during servicing them.

There is considerable variation in the requirements of such a jack as regards the point above the ground at which the jack must apply its lifting force. For example, two aeroplanes of different type, may each have a 90 inch wing height, and one of these types may require a 48 inch jack ram fully extended to provide for adequate servicing, while the other may need only a 36 inch extension jack. Other conditions occur, for example, in which a plane having a wing height of 110 inches may require a jack lift of only 30 inches, while another type of plane having a wing height of 60 inches may require a jack extension lift of 48 inches.

One of the objects of this invention is to provide a variable height jack which will meet requirements such as those indicated above.

A further object of the invention is to provide a variable height jack in which the cylinder or body of the jack is supported in such a way that its elevation above the ground can be altered to adapt it to use with different types of aeroplanes, that is to say, to provide a jack having a frame which can readily be set up as a low jack frame, and also as a jack frame to accommodate aeroplanes in which the starting point of the lift will be elevated to different levels as compared with the starting point of the lift when the jack is set up as a low jack.

In its general construction, the jack includes a body member carrying a ram or plunger which is supported upon an adjustable frame, and one of the objects of the invention is to provide a simple construction for the frame, which can be readily adapted to support the body member of the jack in a low position just above the ground line, and also in a plurality of different elevated positions; and to accomplish this without greatly altering the angle or inclination of the legs of the frame to a vertical line.

A further object of the invention is to provide simple means for extending or lengthening the legs of the frame, and to provide means for resisting the horizontal stresses in the legs at or near the ground line, capable of being used with different variable heighth setups of the frame.

Further objects of the invention will appear hereinafter.

The invention consists in the novel parts and combination of parts to be described hereinafter, all of which contribute to produce an efficient variable height jack.

A preferred embodiment of the invention is described in the following specification, while the broad scope of the invention is pointed out in the appended claims.

In the drawing:

Fig. 1 is a side elevation of a jack or shore embodying my invention and illustrating the jack structure set up to form a high jack, that is to say, a jack adapted to support an aeroplane wing located at considerable elevation above the ground.

Fig. 2 is a side elevation with certain parts broken away, illustrating the jack structure set up as a low jack in which the supporting head of the jack is maintained at a relatively low elevation above the ground. In this view certain parts are broken away and shown in cross-section.

Fig. 3 is an ideal sectional plan taken about on the line 3—3 of Fig. 1, to further illustrate the construction of the braces near the ground line for resisting horizontal components of stresses existing and developed longitudinally of the legs of the frame.

Fig. 4 is a fragmentary section taken in a vertical plane, and illustrating one manner in which a joint may be formed between an extension leg and the upper leg member.

Fig. 5 is a section taken about on the line 5—5 of Fig. 4, and further illustrating details of the construction illustrated in Fig. 4.

Fig. 6 is a horizontal section taken about on the line 6—6 of Fig. 1, and illustrating details at the supporting head or collar at the upper end of the jack.

Fig. 7 is a view similar to Fig. 3, but illustrating a modified embodiment of the tie bars for connecting the lower ends of the legs.

Referring more particularly to the parts, and particularly to Fig. 2, this view illustrates the jack set up as a low jack, while Fig. 1 illustrates the jack set up as a high jack. Referring now to Fig. 1, the jack involves the use of a body member 1 which, in the present instance, is in the form of a fluid-operated cylinder in which the piston 2 indicated in dotted lines, is forced upwardly by the fluid pressure so as to extend the jack plunger 3 above the upper end of the jack frame that in the present instance, is surmounted by a head or collar 4. In the present instance, the plunger 3 is formed with threads as indicated, on which a nut 5 is mounted. The fluid pressure may be applied to the lower end of the cylinder by providing a small pump (not illustrated) carried on the base plate 6 of the cylinder; or, if desired, fluid pressure could be supplied to the lower end of the cylinder through a hose. In the operation of jacks of this type, the nut 5 when seated on the collar 4, supports the load on the head 7 of the jack, and will maintain this head in a fixed position regardless of whether there is any leakage or loss of pressure under the piston 2.

The jack frame includes a plurality of legs which are attached to the collar 4 preferably by a joint employing a pivot pin or bolt 8 corresponding to each leg member 9. There may be as many of these leg members 9 as desired, but in the present instance, the frame is illustrated as a tripod. The upper end of the body member or cylinder 1, includes a neck 10 which is rigidly secured in the collar 4, and just below this neck the construction may include an upper head 11 which suspends the lower head or base 6 of the cylinder on tie rods 12.

In accordance with this invention, I provide a plurality of links 13 corresponding respectively to the different leg-members 9. These links may extend at any inclination, and from any point on the body 1, out to the leg-members. In the low jack construction illustrated in Fig. 1, these links extend upwardly from a point near the lower end of the cylinder, and connect at their outer ends to the leg-members. In the high jack setup the links 13 are connected to the lower portions of the leg members 9, and in this high jack setup, extension legs 14 are provided that connect to the lower ends of the leg-members 9. In order to enable the links 13 to be used in these two positions and to adapt the construction to form a low jack or a high jack, I prefer to provide a sliding sleeve 15 on each leg-member. These sleeves 15 are preferably in the form of split sleeves with lugs 16 provided with clamping bolts 17 which may be tightened up to clamp the sleeves rigidly on the leg-members. If desired, the outer ends of the links 13 can be held loosely on the bolts 17 to permit the links to have the necessary pivotal movement around these bolts in transforming the jack from one type to the other.

The upper ends of the leg-members are fitted in between lugs 8a and are maintained in the same radial plane at all times. The legs, of course, are 120° apart as viewed in plan.

In the present instance, I prefer to use each split sleeve 15 to form a socket 18 at the lower ends of the leg-members 9 to receive the upper ends of extension legs 14 (see Fig. 4). In order to accomplish this, of course, it is merely necessary to loosen up the bolts when the sleeves 15 are in the position shown in Fig. 2, and slide the sleeves down to the lower ends of the leg-members 9 so that they will project beyond the lower ends of the leg-members somewhat as illustrated in Fig. 4, and then the bolts 17 are clamped up to secure the sleeves in this position and form a fixed socket 18. The lower end of the sleeve may be threaded if desired, to enable the extension leg 14 to be screwed into it. At the lower end of each leg-member 9 as illustrated in Fig. 2, a split socket 19 is provided, with a bolt to enable it to be clamped to the leg-member, and it has a lug at its end pivotally mounted between similar lugs 20 by means of a pin 21. These lugs 20 project up from a base or foot-plate 22.

In transforming the jack from a low jack to a high jack, the socket 19 is disengaged from the leg-member 9, and is clamped onto the lower end of the extension leg 14. Threading of the sockets 19 is permissible but not preferable. In any case the socket should be equally well attachable to the lower end of the leg-member 9 and the extension leg 14.

The base plates or foot-plates 22, rest upon the ground or cement pavement. In order to resist horizontal components of longitudinal thrusts exerted in the legs due to the load, I prefer to provide adjustable tie-bars or links 23 connecting the plates 22. In order to enable these tie-bars to be quickly adjustable, I prefer to construct them in the form of two overlapping straps 23a and 23b. (See Fig. 3.) One of these straps may be provided with spaced bolt holes 24 to align with holes in the opposite strap member so as to receive clamping bolts 25 to secure these clamping straps together. These bolt holes would be positioned so as to come into alignment with each other for the different base spreads corresponding to different heights for the jacks. In this connection, of course, it should be understood that the extension legs 14 may be of different lengths so as to give different heights to the jack to meet various specifications. The outer ends of the straps 23a and 23b are pivotally mounted between the lugs 26 that project from the base plates 22. Removable bolts can be used for this purpose, enabling the parts of the jack to be shipped in a knocked down condition for quick assembly.

Means is provided on the body member 1 for connection to the inner ends of the links 13, and in the present instance, this means is in the form of a split sleeve or collar 29 that can be rigidly clamped to the barrel of the jack in any position. In Fig. 2 this collar is secured to the barrel near its lower end. This sleeve is provided with lugs 30 to which the inner ends of the links 13 are pivotally attached.

The collar 4 and the body 1 are rigid with each other so that the body-member cannot swivel on its own longitudinal axis. This insures that the lugs 30 will always maintain themselves in the same radial plane with the lugs 16, thereby assisting in holding the legs spaced equally apart.

In Fig. 7 I illustrate a modification of the construction for the base of the frame that may be employed instead of that illustrated in Fig. 3. In the construction illustrated in Fig. 7, a center ring 31 is provided with double lugs 32 spaced 120° apart on the ring, and these lugs attach t -djustable radial tie rods or tie bars 33 formed of two overlapping sections 33a and 33b that are adjustably secured together by

bolts 34. The outer sections 33a of these tie rods would, of course, secure to the foot-plates 35 in the same manner as the tie rod sections 23a are secured to the foot-plates 22.

In order to prevent the upper end of the head 7 from injuring the under side of an aeroplane wing or other part supported by the jack, the head 7 may be provided with a saddle plate 7a if desired, with a cushioning material on its upper side.

Many other embodiments of the invention may be resorted to without departing from the spirit of the invention.

What I claim is:

1. In a jack or shore, variable for height, the combination of a substantially upright body-member, a plunger associated with the body-member and extensible upwardly therefrom, a plurality of leg-members with joint connections connecting the same to the upper portion of the body-member, a link corresponding to each leg-member, a sleeve having a joint connection with each link and secured to the lower end of each leg-member so as to project beyond the same and form a socket to receive the upper end of an extension leg, to cooperate in forming a high jack, said sleeves capable of sliding upwardly on the leg-members and having means for securing them in a more elevated position on the leg-members to form a low jack, and means including joint connections corresponding to the different links for securing the links to the body-member.

2. In a jack or shore, variable for height, the combination of a substantially upright body-member, a plunger associated with the body-member and extensible upwardly therefrom, a plurality of leg-members with joint connections connecting the same to the upper portion of the body-member, a link corresponding to each leg-member, a sleeve on each leg-member having a joint connection with each link, means for securing each sleeve to the lower end of its corresponding leg-member so as to project beyond the same and form a socket to receive the upper end of an extension leg to cooperate in forming a high jack, said sleeves capable of being loosened and slid upwardly to a more elevated position on their leg-members and re-secured there to form a low jack; and means including joint connections corresponding to the different links for securing the links to the body-member.

3. In a jack or shore, variable for height, the combination of a substantially upright body-member, a plunger associated with the body-member and extensible upwardly therefrom, a plurality of leg-members with joint connections connecting the same to the upper portion of the body-member, a link corresponding to each leg-member, a sleeve on each leg-member having a joint connection with each link, means for securing each sleeve to the lower end of its corresponding leg-member so as to project beyond the same and form a socket to receive the upper end of an extension leg to cooperate in forming a high jack, extension legs received in the said sockets to support the body-member in a relatively elevated position, said sleeves capable of being loosened and slid upwardly on their leg-members and re-secured to the same in an elevated position to form a low jack; and means including joint connections corresponding to the different links for securing the links to the body-member.

4. In a jack or shore, variable for height, the combination of a substantially upright body-member, a plunger associated with the body-member and extensible upwardly therefrom, a plurality of leg-members with joint connections connecting the same to the upper portion of the body-member, a link corresponding to each leg-member, a sleeve on each leg-member having a joint connection with each link, means for securing each sleeve to the lower end of its corresponding leg-member so as to project beyond the same and form a socket to receive the upper end of an extension leg to cooperate in forming a high jack, extension legs received in the said sockets to support the body-member in a relatively elevated position, said sleeves capable of being loosened and slid upwardly on their leg-members and re-secured to the same in an elevated position to form a low jack; means including joint connections corresponding to the different links for securing the links to the body-member, base members supporting the extension legs, and adjustable tension members connecting the base members for resisting the horizontal components of the stresses exerted in the extension legs, said adjustable tension members capable of adjustment to adapt the same to cooperate with base members supporting extension legs of different lengths and corresponding to jacks of different heights.

5. In a jack or shore, variable for height, the combination of a substantially upright body-member, a plunger associated with the body-member and extensible upwardly therefrom, a plurality of leg-members with joint connections connecting the same to the upper portion of the body-member, a sleeve on each leg-member, a plurality of links located in substantially radial planes respectively, pivotally connected to the lower portion of the body member, each sleeve having a joint connection with a corresponding link, each sleeve having means associated therewith for enabling the sleeve to be held fixed on its leg-member adjacent the lower end of the leg-member in adapting the above named parts for use in a high jack, said sleeves being also capable of assuming a position at an intermediate point on the leg-members with the links inclining upwardly toward their outer ends in forming a low jack structure.

6. In a jack or shore, the combination of a frame including a collar and a plurality of leg-members, each leg-member having a pivot joint connection to said collar, a foot-plate corresponding to each leg-member and having a disconnectible connection thereto, a body-member located just below said collar and supported thereby, a link pivotally connected to each leg-member and to the body-member, extension legs with means for effecting a joint connection between the same and said leg-members, the lower ends of said extension legs having means for attaching the same to said foot-plates and extensible links attached to the foot plates and connecting the same for resisting the radial component of the load-thrust in each leg.

EDWARD P. GRIME