(No Model.) 2 Sheets—Sheet 1.

T. F. McCAMANT.

SANITARY CLOSET.

No. 427,600. Patented May 13. 1890.

Fig. 1

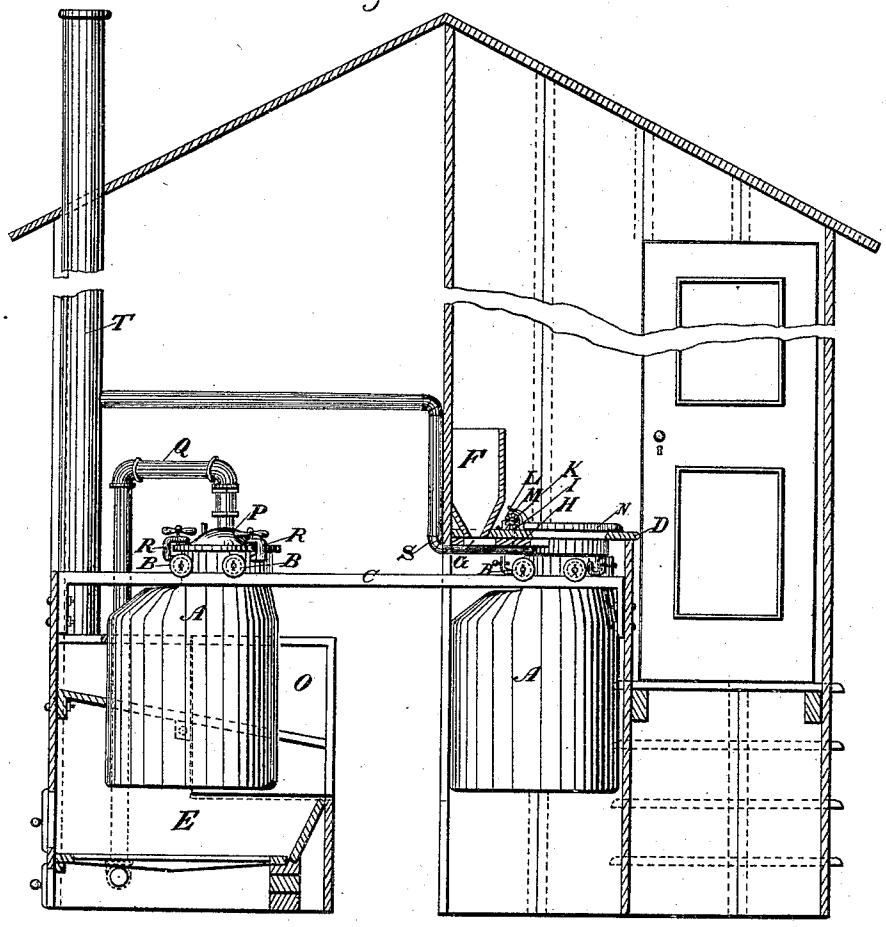

Fig. 2

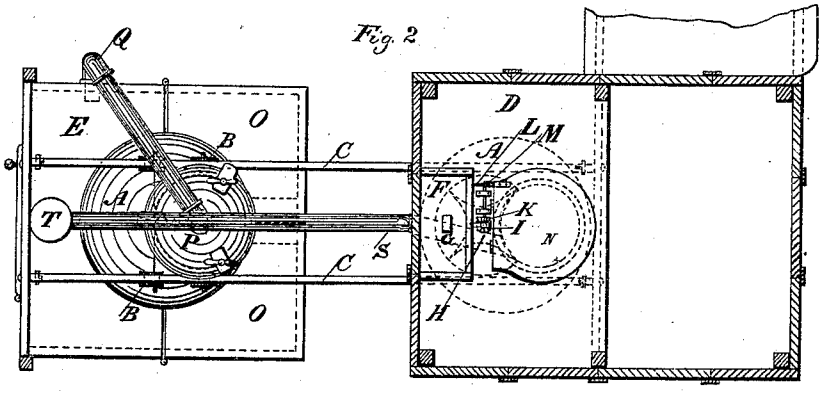

WITNESSES:

Edw. A. Luzenberg

H. Schumacher

INVENTOR

Theodore F. McCamant.

BY Emil Pohrons C.E.

his ATTORNEY

THE NORRIS PETERS CO., PHOTO-LITHO., WASHINGTON, D. C.

(No Model.)

2 Sheets—Sheet 2.

T. F. McCAMANT.

SANITARY CLOSET.

No. 427,600. Patented May 13, 1890.

Fig. 3.

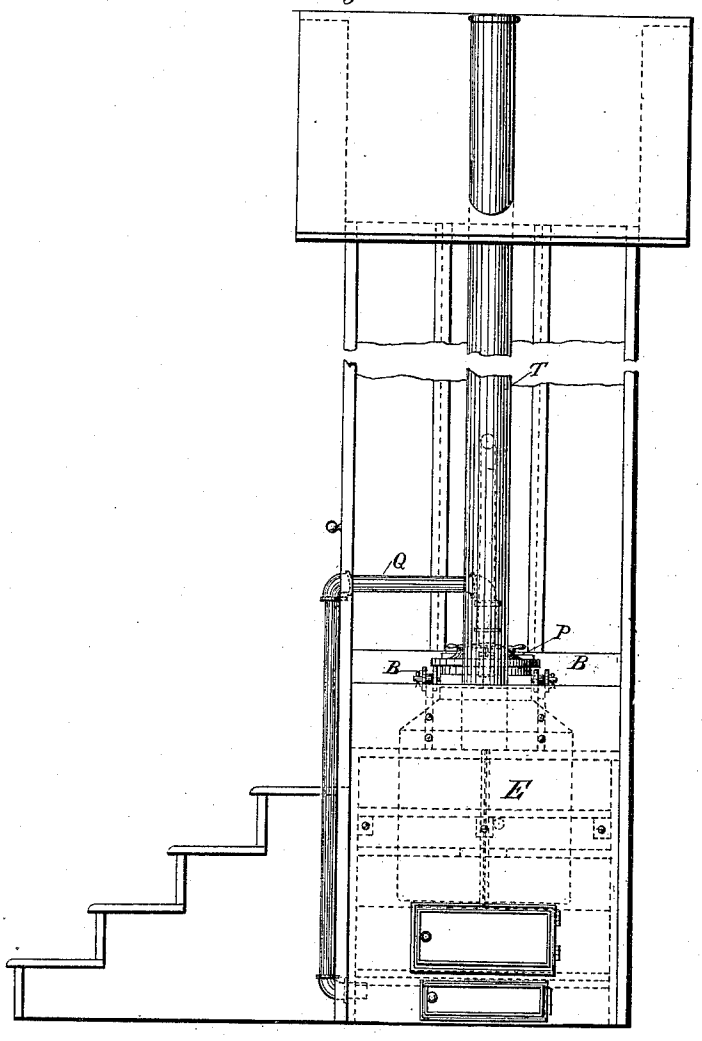

WITNESSES:

Edw. A. Luzenberg

H. C. Schumacher

INVENTOR

Theodore F. McCamant,

BY

Emil Behrens C.E.

his ATTORNEY

THE NORRIS PETERS CO., PHOTO-LITHO., WASHINGTON, D. C.

UNITED STATES PATENT OFFICE.

THEODORE F. McCAMANT, OF SAN ANTONIO, TEXAS.

SANITARY CLOSET.

SPECIFICATION forming part of Letters Patent No. 427,600, dated May 13, 1890.

Application filed March 11, 1889. Serial No. 302,867. (No model.)

To all whom it may concern:

Be it known that I, THEODORE F. McCAMANT, a citizen of the United States, residing at San Antonio, in the county of Bexar and State of Texas, have invented a new and useful Sanitary Closet, of which the following is a specification.

My invention relates to improvements on sanitary closets for destroying the human excrements on the premises with little labor and expense—viz., that a receptacle of cast-iron or any other suitable material is inserted under the seat to receive the excrements, and when full to remove the same to the adjoined furnace to be evaporated or burned to carbon without any smell or odor escaping. I attain these objects by the construction illustrated in the accompanying drawings, in which—

Figure 1 is a vertical section of the entire apparatus—closet and furnace; Fig. 2, a top view of the same as it appears after the removal of the roof. Fig. 3 is an end view, seen in front of the furnace.

Similar letters refer to similar parts throughout the several views.

The receptacle A rests by means of four rollers B on two iron rails C under the opening of the seat D. These two rails C are fixed with one end on the front of the seat D and with the other end on the front part of the furnace E.

A box F, for carrying ash, sawdust, dirt, or disinfecting-powder, passes with its funnel-shaped bottom into a compartment G, which is formed through a four-pointed star H in the rear under the seat D. The axle of this star H carries on the top above the seat D a beveled cog-wheel I, which gears into another cog-wheel K, fixed on a horizontal shaft. This horizontal shaft carries on its other end a ratchet L.

A pawl M of such a shape is fixed in that manner on the hinge side of the seat-lid N that when the seat-lid is shut down the pawl M will by means of a spring be inserted into the ratchet L and accomplish a quarter of a turning on the beveled cog-wheels I and K, whereby the star H will spread over the excrements the contents of the compartment G. Under this compartment G runs from the mouth of the receptacle a pipe S into the smoke-stack T, and ventilates in this way the receptacle.

Outside the closet is a furnace E, which has two doors O on the side near to the closet to enable the receptacle A to be inserted into the furnace.

A cover P, with asbestus packing, will shut the receptacle by means of three clamp-screws R, hinged on the mouth of the same. Securely attached to this cover P is a pipe Q, which passes under the grate of the furnace. After the fire is started gas will then be developed in the receptacle and escapes through the pipe Q into the furnace, whereby it not only furnishes firing material, but through the burning of this smelling gas the air will not be impurified.

Having now fully described my invention, what I claim as new, and desire to secure by Letters Patent, is—

In a dry closet, the combination of the seat D and its supporting frame-work and the furnace E, of the rails C C, suitably fastened to and connecting the frame-work of the closet and the furnace, and a metallic receptacle A, provided with rollers B B on both sides and adapted to move on rails C C, and a neck corresponding in size to the size of the seat-opening, whereby the said receptacle may be moved between the closet and furnace at will, substantially as set forth.

In testimony that I claim the above I have hereunto subscribed my name in the presence of two witnesses.

THEODORE F. McCAMANT.

Witnesses:
E. A. LUZENBERG,
WM. SCHUEHLE.