Aug. 24, 1965 R. D. BISSELL ETAL 3,202,063

GUARD DEVICE FOR PRESSURE-RESPONSIVE INSTRUMENTS

Filed Aug. 10, 1962

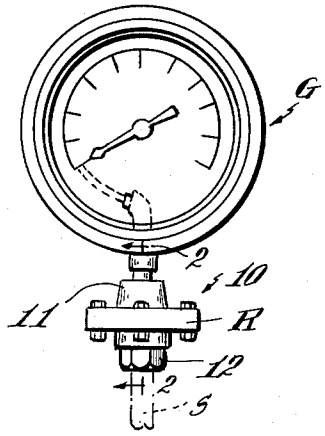

Fig. 1

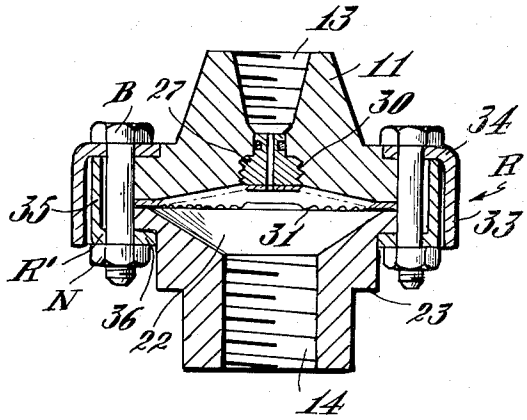

Fig. 2

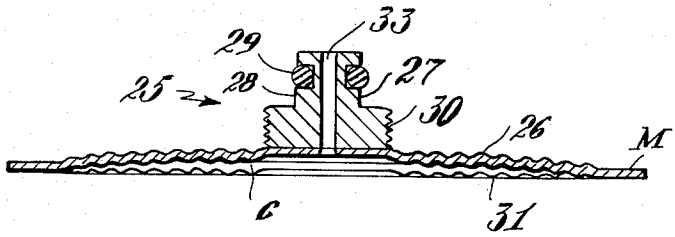

Fig. 3

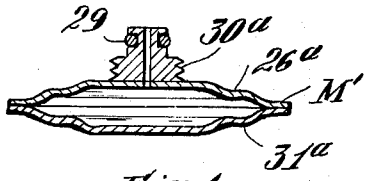

Fig. 4

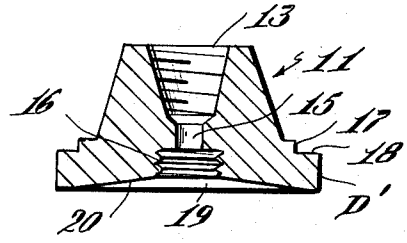

Fig. 6

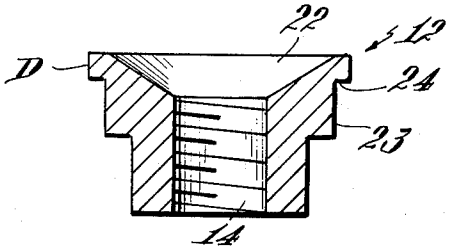

Fig. 5

INVENTORS
Robert D. Bissell
Robert J. Ingham

United States Patent Office 3,202,063 Patented Aug. 24, 1965

3,202,063

GUARD DEVICE FOR PRESSURE-RESPONSIVE INSTRUMENTS

Robert D. Bissell, Orange, and Robert J. Ingham, Fairfield, Conn., assignors, by mesne assignments, to Dresser Industries, Inc., Dallas, Tex., a corporation of Delaware

Filed Aug. 10, 1962, Ser. No. 216,186
17 Claims. (Cl. 92—91)

This invention pertains to guard devices for use in association with instruments such, for example, as pressure gauges, indicators, recorders, or pressure-transmitters, and which are designed to isolate the instrument from the source of pressure thereby to prevent injury to the instrument from overpressure, corrosion, freezing, or the plugging of the instrument by sediment or the like suspended in or carried by the pressure fluid, and more especially to a guard device of the kind wherein a pressure-sensitive diaphragm is interposed between the source of pressure and a liquid which transmits motion from the diaphragm to the pressure-responsive element of the instrument. The present invention constitutes an improvement over the guard device disclosed in the patent to Ochsner, No. 2,839,087, dated June 17, 1958, and like the device of said prior patent has a casing comprising complemental upper and lower rigid members with the diaphragm interposed between them, the upper member being designed for connection to the instrument to be protected and the lower member for connection to the source of pressure.

Among the objects of the present invention is to provide a guard device of a design such as to minimize construction costs; for example, one wherein the top and bottom members may be of the same diameter as the diaphragm and requiring no bolt holes in said members themselves. Thus, these parts may readily be made from bar stock and because of their relatively small diameter require a minimum of material, this being particularly advantageous as respects of the bottom member which must often be made of expensive corrosion-resistant material. A further object is to provide a guard device such that the pressure instrument may be disconnected from the top member of the casing while the diaphragm is still exposed to the source of pressure without danger of so overstressing the diaphragm as to rupture it or to cause it to take a permanent set. In the attainment of the latter object, the pressure-sensitive diaphragm is associated with a relatively rigid back-up plate or diaphragm which limits the deflection of the pressure-sensitive diaphragm in response to increase in fluid pressure, the two diaphragms being permanently united at their margins to form a unit which may be secured leak-tight to the top member of the casing, but so that it may readily be removed for replacement or repair, requiring no retaining screws or equivalent extraneous means for securing the diaphragm unit to the top member of the casing. A further object is to provide novel means for connecting the top and bottom members of the casing comprising a pair of clamping rings which may be of thin sheet stock but so devised as to avoid deformation when force is applied for clamping the parts together, and wherein the rings are of such design that, in drawing the upper and lower parts of the casing toward each other, these rings effect a pressure seal between the lower surface of the diaphragm unit and the upper surface of the bottom member of the casing. Because these rings are not normally exposed to the corrosive pressure fluid, they may be made of relatively inexpensive carbon steel. A further object is to provide a guard device comprising a back-up diaphragm and a pressure-sensitive diaphragm which are so united that no interposed gasket or equivalent yieldable pressure seal is required, thereby to insure against leakage, and wherein both diaphragms may be made of sheet material which may be given the desired configuration in a press, thus making it possible to produce such parts at low cost and with assurance of strict uniformity. A further object is to provide a guard device wherein the diaphragm unit is sealed to the top member of the casing by the use of an O-ring and the top member, diaphragm unit and the instrument mounted upon the top member may be separated from the bottom member of the casing without any leakage of the pressure-transmitting liquid from the assembly thus removed. A further object is to provide a modified diaphragm unit, omitting the aforesaid rigid back-up plate, consisting of two flexible diaphragms permanently united leak-tight at their peripheral margins and constituting a capsule or metallic bellows, such capsule being useful when a lower volumetric spring rate is required in the seal.

Other and further objects and advantages of the invention will be pointed out in the following more detailed description and by reference to the accompanying drawings wherein:

FIG. 1 is a small scale elevation illustrating the guard device of the present invention with a pressure gauge mounted thereon;

FIG. 2 is a vertical diametrical section, to larger scale than FIG. 1, through the guard device of the present invention, showing its parts assembled for use;

FIG. 3 is a section in the same plane as FIG. 2, but to larger scale, showing the diaphragm unit separate from the other parts;

FIG. 4 is a view similar to FIG. 3, but illustrative of a modification;

FIG. 5 is a diametrical section of the bottom member of the casing of the guard device; and

FIG. 6 is a similar view of the top member of the casing of the guard device.

Referring to the drawings, the numeral 10 (FIG. 1), designates the guard device as a whole, showing a conventional gauge G mounted upon the upper member of the casing of the guard device and, in broken lines, indicating a supply pipe S connected to the lower member of the casing of the guard device.

The guard device has a casing (FIGS. 2, 5 and 6) comprising the top member 11 and the bottom member 12, the member 11 having the axial screw-threaded socket 13 for the reception of the nipple of the gauge, while the bottom member 12 has the internally screw-threaded bore 14 for the reception of the end of the supply pipe. The top and bottom members of the casing are of rigid material and of a simple design, each being circular and symmetrical about a vertical axis and since neither of these parts is required to have holes for the reception of bolts, each of these parts, respectively, may be made by machining it from bar stock in a single operation, thus minimizing cost of production. As shown in FIG. 1, the lower part of casing member 12 is provided with wrench flats to facilitate installation.

Referring to FIG. 6, the downwardly-tapering socket 13 of the top member 11 of the casing merges at its lower end with a coaxial cylindrical bore 15 and this bore, in turn, merges at its lower end with a cylindrical, screw-threaded bore 16 of larger diameter, designed for the reception of means for connecting the diaphragm unit (hereinafter to be described) to the top member 11 of the casing. The upper part of the top member 11 is tapered upwardly, externally, to save material and to impart a pleasing appearance and has a peripheral cylindrical surface 17 and a horizontal annular seat 18 for engagement with one of the clamping rings, hereinafter to be described. The bottom surface of the member 11 is recessed to pro-

vide a shallow cavity 19 whose roof is here shown as comprising a substantially horizontal central portion and a downwardly and outwardly sloping conical marginal portion making, for example, an angle of 7° with the horizontal. The roof of this cavity constitutes an abutment for the outer convolutions, at least, of the backing member of the diaphragm unit hereinafter described.

In the upper side of the bottom member 12 (FIG. 5), there is a shallow, downwardly-tapering, conical, axial cavity 22 whose smaller end merges with the cylindrical, internally screw-threaded bore 14 above described, the part 12 also having a peripheral surface 23 (here shown as of the same diameter as the surface 17 of the member 11) and a horizontal annular seat 24 for engagement with the second of the clamping rings hereinafter described.

The diaphragm capsule or unit, as illustrated in FIG. 3, comprises the backing member or plate 26, here shown as provided with a rigid axial hub portion 27 which is permanently united to the part 26, for example, by welding or brazing. As shown, this hub is screw-threaded, as at 30, and of a diameter such that it may be threaded into the bore 15 of the top member 11 of the casing. The hub also has an upwardly directed unthreaded cylindrical stem portion 28 of smaller diameter than the threaded portion and provided with a peripheral groove which receives a conventional O-ring 29. The part 28 is of such a diameter that, when disposed within the bore 15 of the top member 11, the O-ring provides a leak-tight seal between the diaphragm unit and the top member 11.

The diaphragm unit, as shown in FIG. 3, also comprises the flexible diaphragm member 31 which is permanently united leak-tight at its marginal portion to the marginal portion of the backing member 26, for example, by solder or welding. The hub member 27 is provided with an axial bore 33 of small diameter which is extended down through the rigid backing plate 26 so as to communicate with the chamber C between the part 26 and the flexible diaphragm 31. In assembling the parts the hub portion 27 of the diaphragm unit, having an O-ring installed in its stem portion, is screwed into the bore 16 of the top member 11, thus providing a leak-tight connection between the diaphragm unit and the top member, although permitting ready removal of the diaphragm unit for replacement or repair, no screws or other extraneous parts being necessary for holding the diaphragm unit in assembled relation to the top member. When the parts are assembled, the shallow conical cavity 22 in the upper end of the bottom member 12 provides a chamber for the pressure fluid so that the latter may contact the entire area of the diaphragm 31 within its margin and, at the same time, permits the diaphragm to move freely in response to pressure variations within the chamber 22.

The backing member 26 of the diaphragm unit has corrugations corresponding to hose of the much more flexible diaphragm member 31, the corrugations being such that if the gauge G be removed, while the member 31 is still exposed to pressure, the ribs of the flexible diaphragm will fit within the grooves of the backing plate or more rigid diaphragm 26 so that the latter will provide a seat or abutment for substantially the entire area of the flexible diaphragm 31, thus preventing overstressing of the diaphragm member 31 with consequent permanent deformation of the latter. This backing plate or upper member of the diaphragm unit, being made of sheet material (although much heavier than the metal which forms the flexible lower diaphragm 31) may be shaped by pressure between suitable dies, as above suggested, rather than requiring that it be machined from bar stock, thus making it easy to reproduce such backing plates in quantity with the assurance that they will all be exactly alike.

While the backing member or upper diaphragm 26 of the diaphragm unit is of a material which is heavier or stiffer than that of the lower diaphragm 31, so as to insure that during normal operation of the gauge substantially all of the deflection in the diaphragm unit will be confined to the lower diaphragm, the upper diaphragm is not absolutely rigid. Accordingly, to insure that under normal conditions the upper diaphragm will not be overstressed and thus permanently deformed, the roof of the cavity 19 in the thick and relatively rigid part 11 is so shaped that at least the outer one or two of the concentric ribs of the diaphragm member 26 will be supported by contact with said roof thus to prevent excessive deflection deformation thereof.

For securing the top and bottom members of the casing together, two clamping rings R and R^1 (FIG. 2) are provided. The ring R has the cylindrical portion 33 and the horizontal annular flange 34, the central opening in this flange being of a diameter such that the inner edge of this flange may fit snugly against the cylindrical peripheral surface 17 (FIG. 6) of the top member 11, while the undersurface of the flange rests upon the seat 18. The ring R^1 is of smaller external diameter than the ring R, having the vertical cylindrical portion 35 which, when the parts are assembled, nests within the cylindrical portion 33 of the ring R. The central opening in the horizontal flange 36 of ring R^1 is of a diameter such that the inner edge of the flange may fit snugly against the cylindrical peripheral surface 23 (FIG. 5) of the part 12, while the upper surface of the flange bears against the seat surface 24. The flanges 34 and 36 of the two rings are provided with holes for the reception of bolts B whose heads, as here shown, rest upon the uper surface of the flange 34 of the ring R and whose threaded ends extend down through the holes in the flange 36 of the ring R^1 and receive nuts N which bear against the flange 36 whereby the flanges of the rings may be drawn toward each other thereby to hold the bottom member 12 of the casing in leak-tight clamping relation to the marginal portion M of the diaphragm unit. As will be noted from inspection of FIG. 2, the holes in the flanges of the two rings are so located that, when the parts are assembled, the peripheral surfaces of the clamping bolts substantially contact the outer peripheral edges of the top and bottom casing members 11 and 12 respectively, while portions of the heads and nuts of the clamping bolts overlap the horizontal shoulders 18 and 24 of the casing members, so that when clamping pressure is exerted, the thin flanges of the rings R and R^1 will not be bent by reason of cantilever action. The tightening of the bolts exerts compressive force on the flanges of the two rings and also on the axial cylindrical portion of the ring R^1 and the force, thus exerted, provides a pressure seal between the lower surface of the diaphragm unit and the upper surface of the bottom member of the casing so that leakage from the chamber 22 is impossible.

The arrangement of the parts, when assembled, as above described is made possible by the fact that the top and bottom members of the casing are of a maximum diameter, at those portions D and D^1 (FIGS. 5 and 6), which are opposed to each other, equal to the diameter of the diaphragm unit so that no bolt holes are required or permissible in the parts 11 and 12, the means for clamping the parts 11 and 12 in assembled relation to the diaphragm unit being wholly extraneous to the parts 11 and 12 themselves.

In use, the cavity C, the bore 33 and the interior of the Bourdon tube (not shown) of the gauge G are completely filled with a non-compressible liquid, for example oil, so that when pressure is exerted within the space 22 the resultant motion of the diaphragm 31 is transmitted by the liquid to the Bourdon tube, thereby to actuate the index of the gauge.

In FIG. 4 a modification of the diaphragm unit is illustrated wherein two diaphragms 26*a* and 31*a* (both flexible) are united at their margins M^1, for example, by solder or brazing, the upper diaphragm 26*a* having the rigid hub 30*a* which corresponds to the hub 27 of the diaphragm unit of FIG. 3, whereby the unit of FIG. 4

may be secured to the top member 11 of the casing, as above described. In this instance, the diaphragm unit really constitutes a capsule or metallic bellows and is useful in instances where it is necessary or desirable to displace a greater volume of fluid from the diaphragm unit before the limit of compression of the diaphragm unit is reached.

Herein for convenience reference is made to the guard device as symmetrical about a "vertical" axis, and to the parts 11 and 12 as "top" and "bottom" members, respectively, but it is to be understood that the guard device may be used in any desired position, either with the axis of symmetry horizontal or otherwise disposed. Moreover, while reference has been made to solder or welding for permanently uniting certain parts, it will be understood that any appropriate means, including an appropriate adhesive, may be employed.

While one desirable embodiment of the invention has been illustrated and described, it is to be understood that the invention is broadly inclusive of all recognizable equivalents and of any and all modifications falling within the scope of the appended claims.

We claim:

1. A guard device for use with a fluid pressure-responsive instrument, said guard having a casing comprising coaxial upper and lower rigid members so shaped that when assembled they provide an interior chamber for the reception of a diaphragm unit, the upper member having a socket for the reception of an instrument-supporting part, a diaphragm unit comprising at least one flexible diaphragm and a part having a rigid attaching hub which fits leak-tight within an axial bore in the upper member of the casing, said hub having an axial fluid passage whose upper end communicates with said socket and whose lower end communicates with the space directly above said flexible diaphragm, and means so drawing said upper and lower members of the casing together as to clamp the margin of the flexible diaphragm leak-tight between said members, each of said upper and lower rigid members being devoid of openings for the reception of fastening means to secure the rigid members together and clamp said diaphragm therebetween.

2. A guard device according to claim 1, wherein a portion of the attaching hub is cylindrical and unthreaded and has a peripheral groove holding an O-ring, and the bore in the top member is of a diameter such as to receive said cylindrical part of the hub with its O-ring with a leak-tight fit.

3. A guard device according to claim 1, wherein the diaphragm unit comprises two coaxial diaphragms of substantially equal diameter and means permanently bonding the margins of the diaphragms leak-tight, together, the attaching hub being coaxial with and fixed to one of said diaphragms, the diaphragms being so shaped as to provide a fluid-receiving chamber between them.

4. A guard device according to claim 1, wherein the diaphragm unit comprises an upper, relatively rigid backing plate and a lower, flexible diaphragm, said plate and diaphragm being of substantially the same diameter, and means permanently bonding their margins leak-tight together, the attaching hub being coaxial and fixed to the backing plate, the rigid backing having a central hole coaxial with the bore in the hub.

5. A guard device according to claim 1, wherein each of the upper and lower rigid members is of a maximum peripheral diameter equal to that of the flexible diaphragm and the means for clamping the margin of the flexible diaphragm between the upper and lower members comprises two coaxial rings having flanges which overlap portions of the upper and lower members of the casing respectively, and bolts for drawing said rings together.

6. A guard device for use with a pressure-responsive instrument, said guard device having a casing comprising coaxial upper and lower rigid members so shaped that when assembled they provide an interior chamber for housing a flexible diaphragm, each of the upper and lower members of the casing being a solid piece of bar stock, each of said members having a peripheral shoulder defining the inner edge of an annular horizontal seat, and means engaging the respective annular horizontal seats for drawing the upper and lower members of the casing into clamping relation to the marginal portion of said diaphragm each of the upper and lower rigid members being devoid of openings for the reception of fastening means for drawing the rigid members together.

7. A guard device for use with a pressure-responsive instrument, said guard device having a casing comprising coaxial upper and lower rigid members so shaped that when assembled they provide an interior chamber for housing a flexible diaphragm, a diaphragm unit comprising an upper relatively rigid diaphragm and a lower more flexible diaphragm, means uniting the marginal portions of said diaphragms leak-tight, means removably supporting the upper diaphragm on the upper member of the casing that the flexible diaphragm is housed within said interior chamber, the roof of said chamber being so shaped as to provide a support for at least the outer portion of the upper diaphragm thereby to protect the latter from damage by exposure to excessive pressure, said rigid members being engageable respectively with the opposite sides of the marginal portion of said diaphragm unit to clamp the same therebetween in fluid tight relation, and fastening means for drawing said rigid members together in clamped relation with the marginal portion of said diaphragm unit, at least said upper rigid member being devoid of openings for the reception of said fastening means.

8. A guard device for use with a pressure-responsive instrument, said guard device having a casing comprising coaxial upper and lower rigid members so shaped that when assembled they provide an interior chamber for the reception of a diaphragm unit, said unit comprising a relatively rigid upper diaphragm and a more flexible lower diaphragm, each of said diaphragms having a series of concentric annular ribs with intervening grooves, means permanently uniting the margins of the diaphragms leak-tight, and means for drawing said rigid members toward each other so as to clamp the united margins of the two diaphragms between them, the upper rigid member being so shaped that the upper wall of the chamber which receives the diaphragm unit provides a seat for contact with at least certain of the ribs of the upper diaphragm, said means for drawing said rigid members toward each other including fastening means for securing the rigid members together, at least said upper rigid member being devoid of openings for reception of said fastening means.

9. In a guard device for a pressure-responsive instrument, coaxial top and bottom rigid members, said members having registering peripheral edges and opposed faces, the top member having a flat annular seat at its upper side and the bottom member having a flat annular seat at its underside, clamping means for drawing said top and bottom members toward each other, the clamping means for drawing the top and bottom members toward each other comprising two concentric rings of sheet material, each of said rings comprising a cylindrical portion, the rings being of such relative diameters that the cylindrical portion of one may nest within the cylindrical portion of the other, each of said rings having a horizontal annular flange provided with bolt holes, bolts passing through the bolt holes of both rings, the parts being so devised that the marginal portions of said flanges may rest upon the annular horizontal seats of said top and bottom members, respectively, whereby, when the bolts are tightened, the top and bottom members are drawn toward each other with clamping pressure, said top and bottom members cooperating to provide a chamber within said members, and diaphragm means disposed within said chamber and clamped between said members.

10. The combination according to claim 9, wherein the

top and bottom members are circular at any horizontal section and of the same outside diameter, and wherein the bolt holes in the two concentric rings are so located that the bolts are wholly external to said rigid top and bottom members.

11. A guard device for use with a pressure-responsive instrument, said guard device having a casing comprising coaxial upper and lower rigid members so shaped that when assembled they provide an interior chamber for the reception of a diaphragm capsule, a diaphragm capsule housed within said chamber and carried by the upper rigid member, each of said rigid members being symmetrical about a vertical axis and each being of a maximum outside diameter equal to the diameter of said diaphragm capsule, and means wholly external to said rigid members for drawing them toward each other and into clamping engagement with the marginal portion of the diaphragm capsule including a ring arranged coaxially of and about the upper rigid member and engageable with an upwardly facing surface thereon, and fastening means for securing said rigid members together and for exerting a force on said ring to remove said upper rigid member toward the lower rigid member, said upper rigid member being devoid of openings for reception of said fastening means.

12. A guard device for use with a pressure-responsive instrument, said guard device having a casing comprising coaxial upper and lower rigid members so shaped that when assembled they provide an interior chamber for the reception of a diaphragm unit, a diaphragm unit within said chamber comprising two coaxial diaphragm members and means permanently uniting the marginal portions of said diaphragm members leak-tight, said upper rigid member having an annular horizontal upwardly facing seat surface extending inwardly from a peripheral edge, and fastening means for securing said rigid members together thereby to clamp the marginal portions of the diaphragm members between them, said means comprising a ring including a cylindrical portion and a horizontal flange, said ring being disposed coaxially over said upper rigid member with a portion of its flange resting on said seat surface, said cylindrical portion of the ring extending about the marginal portions of said diaphragm members in outwardly spaced relation thereto, said horizontal flange having a plurality of bolt receiving openings, a plurality of bolts respectively received in said bolt receiving opening with the heads of the bolts in overlaping relation to said seat surface, said bolt cooperating with said lower rigid member to secure said rigid members together, at leasts aid upper rigid member being devoid of openings for reception of fastening means to secure the right members together.

13. A guard device for use with a fluid pressure responsive instrument, said device comprising a casing including upper and lower rigid members so shaped that when assembled they provide an interior chamber for the reception of a diaphragm capsule, the upper rigid member having an axial bore the outer end of which is adapted to be connected to a pressure responsive instrument, a diaphragm capsule comprising upper and lower overlying diaphragm members which are in sealed relation about their margins, the upper diaphragm member having a coaxial rigid hub removably supported in the other end of said bore in said upper rigid member in fluid tight relation, said diaphragm members being spaced apart except at their margins, said hub having a fluid passage the upper end of which opens directly into said bore and the lower end of which communicates with the space between said diaphragm members, said upper and lower rigid members being respectively engaged with the opposite sides of the margin of said diaphragm capsule to clamp said margin of the capsule between said rigid members in fluid tight relation, means for drawing said upper and lower rigid members together to clamp the margin of said diaphragm capsule therebetween including at least one ring arranged coaxially of and about said upper rigid member and engageable with a coaxial annular upwardly facing surface on said upper rigid member, and means for moving said ring toward said lower rigid member so as to draw said rigid members together including a plurality of bolts disposed about the periphery of said upper rigid member, said upper rigid member being devoid of openings for the reception of fastening means to secure said rigid members together.

14. A guard device for use with a fluid pressure responsive instrument, said device comprising a casing including upper and lower rigid members so shaped that when assembled they provide an interior chamber for the reception of a diaphragm capsule, the upper rigid member having an axial bore the outer end of which is adapted to be connected to a pressure responsive instrument, a diaphragm capsule comprising upper and lower overlying diaphragm members which are in sealed relation about their margins, the upper diaphragm member having a coaxial rigid hub removably supported in the other end of said bore in said upper rigid member in fluid tight relation, said diaphragm members being spaced apart except at their margins, said hub having a fluid passage the upper end of which opens directly into said bore and the lower end of which communicates with the space between said diaphragm members, the upper diaphragm member being substantially less flexible than the lower diaphragm member, each of said diaphragm capsule members having a series of concentric annular ribs with intervening grooves so arranged that the ribs of the lower diaphragm member may nest within the grooves of the upper diaphragm capsule member to provide support for substantially the entire area within the margin of said lower diaphragm capsule member in response to excessive pressure being applied to the underside of said lower diaphragm member, said upper diaphragm member being engageable with said upper rigid member for support of said upper diaphragm member within the margin thereof, said upper and lower rigid members being respectively engaged with the opposite sides of the margin of said diaphragm capsule to clamp said margin of the capsule between said rigid members in fluid right relation, means for drawing said upper and lower rigid members together to clamp the margin of said diaphragm capsule therebetween including at least one ring arranged coaxially of and about said upper rigid member and engageable with a coaxial annular upwardly facing surface on said upper rigid member, and means for moving said ring toward said lower rigid member so as to draw said rigid members together including a plurality of bolts disposed about the periphery of said upper rigid member, said upper rigid member being devoid of openings for the reception of fastening means to secure said rigid members together.

15. A guard device for use with a pressure responsive instrument, said guard device having a casing comprising coaxial upper and lower rigid members so shaped that when assembled they provide an interior chamber for the reception of a diaphragm unit, a diaphragm unit within said chamber comprising two coaxial diaphragm members and means permanently united the marginal portions of said diaphragm members leak tight, said upper and lower rigid members being of the same maximum outside diameters and having annular horizontal seat surfaces extending inwardly from their peripheral edges, and means for drawing said rigid members toward each other thereby to clamp the marginal portions of the diaphragm members between them including a pair of coaxial rings of thin sheet steel, each of said rings comprising a cylindrical portion and a horizontal flange portion, the cylindrical portion of one ring being nested within the cylindrical portion of the other ring, each of said flanges having bolt receiving apertures therein, the margins of the apertured portions of the flanges contacting the horizontal seat surfaces of the respective rigid members and the cylindrical portion of the ring of smaller diameter embracing the bolts, the bolts passing downwardly through the apertures

in the flanges of the two rings and having nuts applied to their lower ends, the heads and nuts of the bolts engaging the flanges of the respective rings, the axes of the bolts being located radially outwardly from the peripheral edges of said members and said heads and nuts overlapping said seat surfaces.

16. In a pressure transmitting guard device for protecting a fluid pressure responsive instrument from the effects of the fluid the pressure which is to be sensed by the instrument, an upper rigid casing member having a lower recessed surface defining a cavity and having a bore extending therethrough coaxially of said cavity, a removable diaphragm capsule carried by said upper casing member and including a pair of overlying circular deformable members of substantially the same diameter, said deformable members having marginal portions in overlying sealed relation, the upper of said deformable members having a rigid hub fixed thereto in coaxial relation and engaged in the lower end of said bore for the support of said diaphragm capsule on said upper casing member, the portion of said upper deformable member within the margin thereof being normally spaced from said upper rigid member, said upper deformable member being engageable with said surface on the upper rigid member in response to abnormal deformation of said upper deformable member to prevent excessive deformation thereof, said deformable members being normally spaced apart within their margins to form a chamber adapted to receive a liquid fill, a lower rigid member in underlying relation to said diaphragm capsule, said upper and lower rigid members having surfaces respectively disposed in clamping engagement with the opopsite sides of the margin of said diaphragm capsule in fluid tight relation, said lower rigid member constructed and arranged to provide communication between the underside of said diaphragm capsule and the fluid the pressure of which is to be sensed, and means for drawing said upper and lower rigid members together and into clamping relationship with the margin of the diaphragm capsule.

17. In a pressure transmitting guard device for protecting a fluid pressure responsive instrument from the effects of the fluid the pressure which is to be sensed by the instrument, an upper rigid casing member having a lower recessed surface defining a cavity and having a bore extending therethrough coaxially of said cavity, said bore having a reduced diameter portion spaced from said cavity, a removable diaphragm capsule carried by said upper casing member and including a pair of overlying circular

deformable members of substantially the same diameter, said deformable members having marginal portions in overlying sealed relation, the upper of said deformable members having a rigid hub fixed thereto in coaxial relation and threadably engaged in the end of said bore next adjacent said cavity for the support of said diaphragm capsule on said upper casing member, said hub having a reduced diameter portion extending into said reduced diameter portion of the bore, means providing a fluid tight seal between the reduced diameter portions of the hub and bore, the portion of said upper deformable member within the margin thereof being normally spaced from said upper rigid member, said upper deformable member being engageable with said surface on the upper rigid member in response to abnormal deformation of said upper deformable member to prevent excessive deformation thereof, said deformable members being normally spaced apart within their margins to form a chamber adapted to receive a liquid fill, a lower rigid member in underlying relation to said diaphragm capsule, said hub leaving a passage extending therethrough and opening into said chamber, said upper and lower rigid members having surfaces respectively disposed in clamping engagement with the opposite sides of the margin of said diaphragm capsule in fluid tight relation, said lower rigid member constructed and arranged to provide communication between the underside of said diaphragm capsule and the fluid the pressure of which is to be sensed, and means for drawing said upper and lower rigid members together and into clamping relationship with the margin of the diaphrgam capsule.

References Cited by the Examiner

UNITED STATES PATENTS

1,045,791	11/12	Hodge	92—104
1,454,459	5/23	Stalker et al.	92—91
1,549,072	8/25	Dole et al.	92—104
1,732,052	10/29	Joyce	92—98
2,220,902	11/40	Hastings et al.	92—99
2,667,786	2/54	Spaulding	92—103
2,679,760	6/54	Harland et al.	92—98
2,839,087	6/58	Ochsner	92—98
2,944,842	7/60	Stiff	285—368
3,058,763	10/62	Nott	285—368

RICHARD B. WILKINSON, *Primary Examiner.*

FRED E. ENGELTHALER, *Examiner.*