July 28, 1925. 1,547,915

E. J. HIRN

TRANSFORMER HOISTING BRACKET

Filed Aug. 28, 1923 2 Sheets-Sheet 1

Fig. 1.

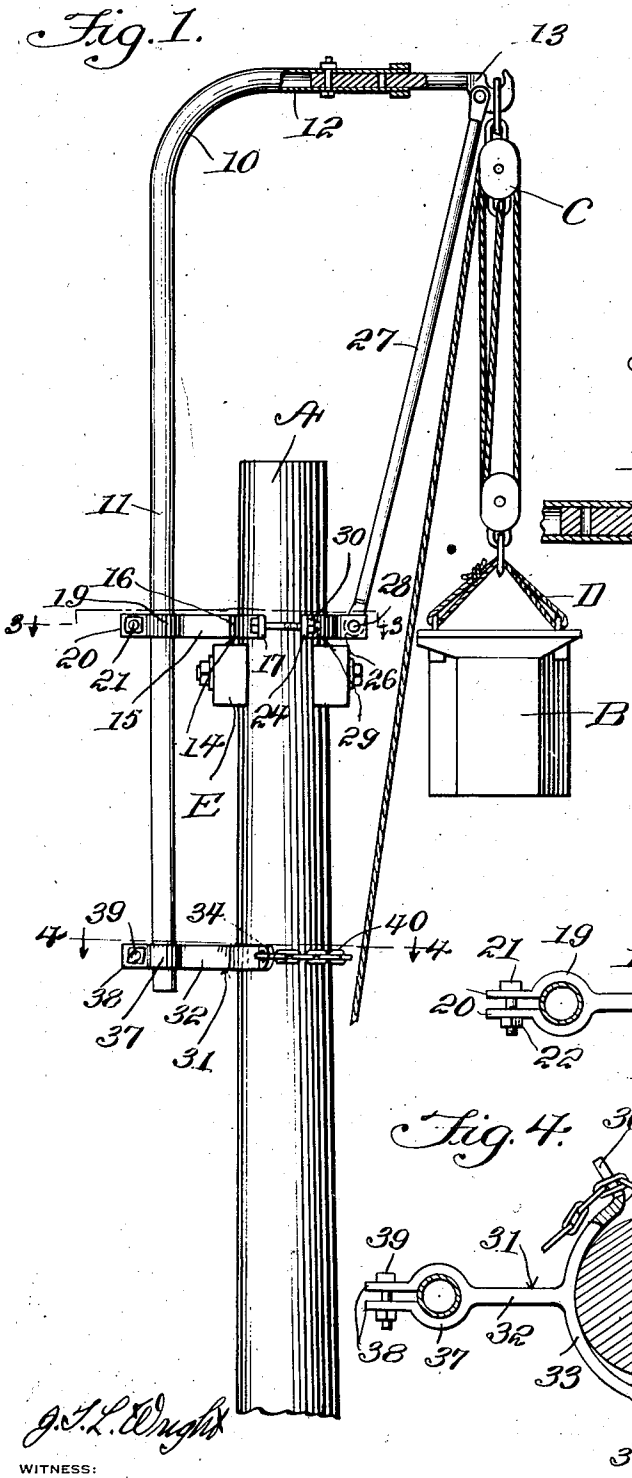

Fig. 2.

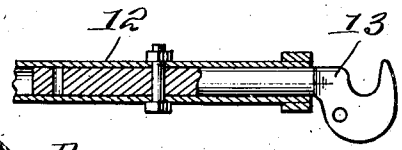

Fig. 3.

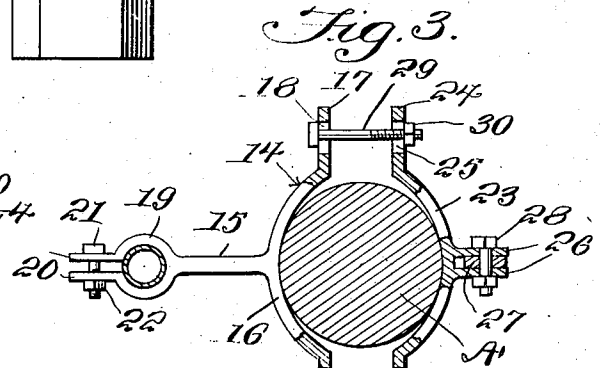

Fig. 4.

Ernest J. Hirn

INVENTOR

By Victor J. Evans

ATTORNEY

J. L. Wright

WITNESS:

July 28, 1925. 1,547,915

E. J. HIRN

TRANSFORMER HOISTING BRACKET

Filed Aug. 28, 1923 2 Sheets-Sheet 2

Fig. 5.

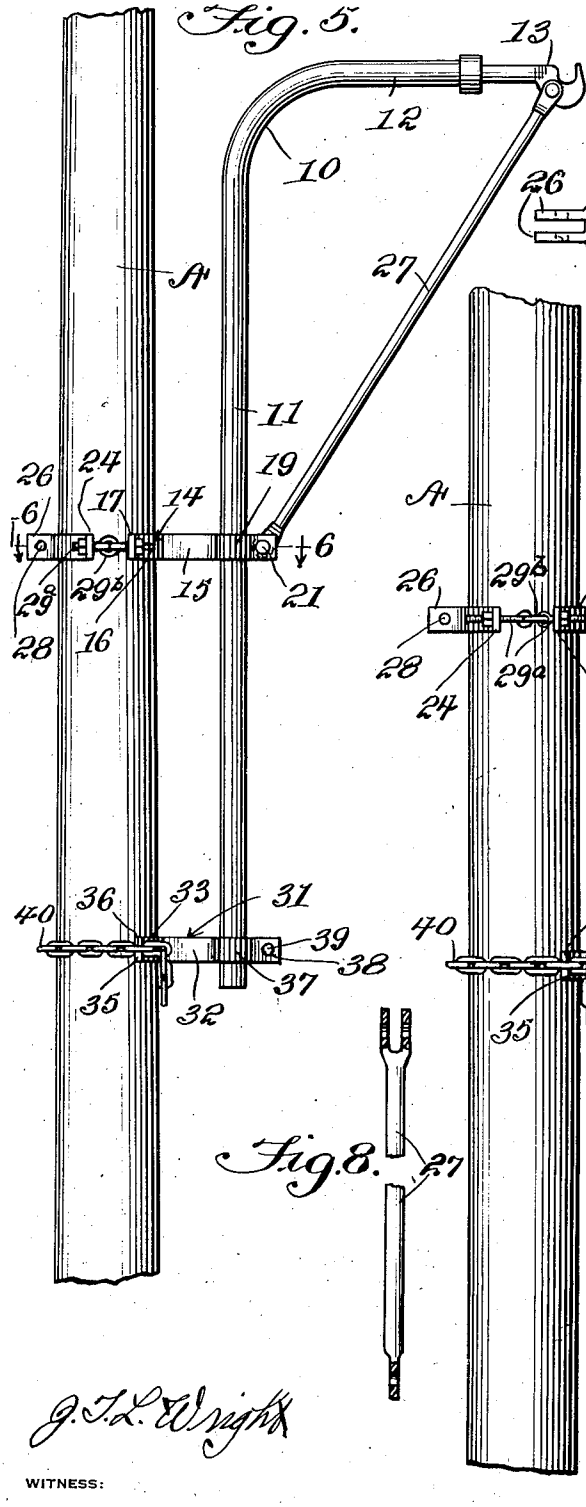

Fig. 6.

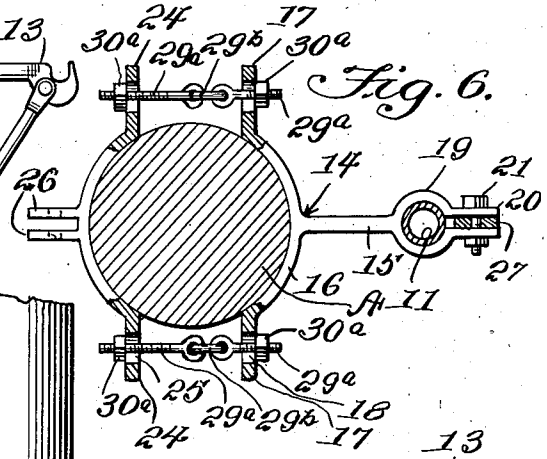

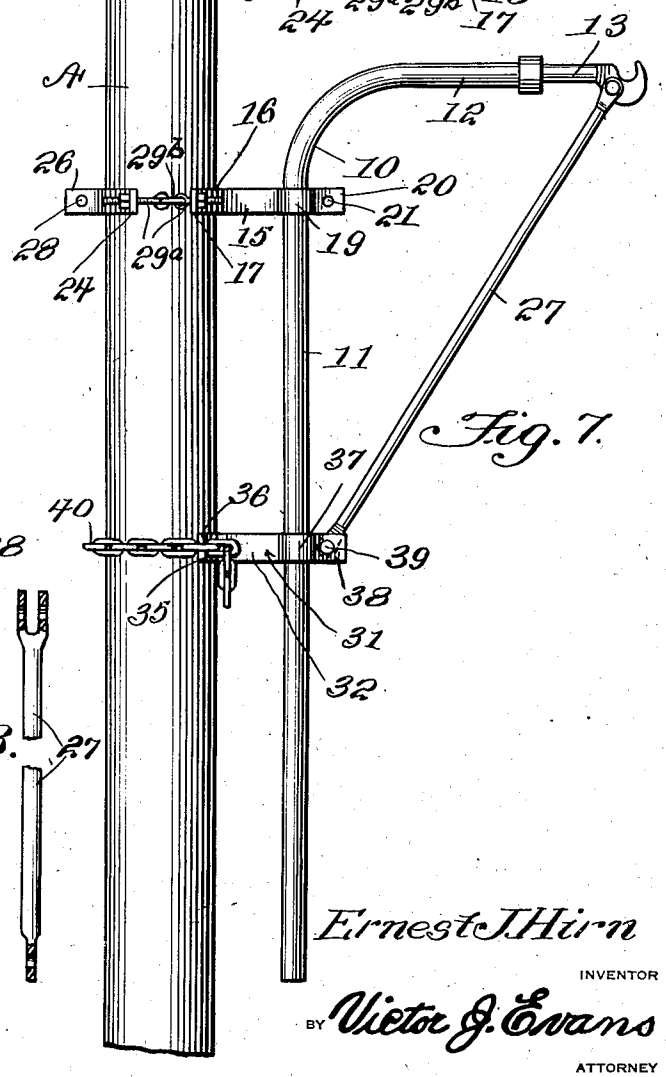

Fig. 7.

Fig. 8.

Ernest J. Hirn

INVENTOR

BY Victor J. Evans

ATTORNEY

J. L. Wright

WITNESS:

Patented July 28, 1925. 1,547,915

UNITED STATES PATENT OFFICE.

ERNEST J. HIRN, OF PRAIRIE DU SAC, WISCONSIN.

TRANSFORMER-HOISTING BRACKET.

Application filed August 28, 1923. Serial No. 659,838.

To all whom it may concern:

Be it known that I, ERNEST J. HIRN, a citizen of the United States, residing at Prairie du Sac, in the county of Sauk and State of Wisconsin, have invented new and useful Improvements in Transformer-Hoisting Brackets, of which the following is a specification.

This invention relates to hoisting apparatus and has for its object the provision of a novel bracket structure designed to be clamped upon a pole on which are strung current carrying wires, the device being for the purpose of facilitating hoisting transformers so that they may be easily handled and mounted.

An important and more specific object is the provision of a supporting bracket of this character which is provided with peculiar clamping means for effecting mounting upon a pole, the clamping means being adjustable for engagement upon poles of different sizes.

An additional object is the provision of a device of this character which will be simple and inexpensive to manufacture, light in weight, easy to install, efficient and durable in service and a general improvement in the art.

With the above and other objects and advantages in view the invention consists in the details of construction to be hereinafter more fully described and claimed and illustrated in the accompanying drawings, in which:

Figure 1 is a side elevation of the device mounted upon a pole and showing it in use for elevating a transformer or the like,

Figure 2 is a detail section through the upper bracket arm illustrating the adjustability thereof,

Figure 3 is a horizontal section on the line 3—3 of Figure 1,

Figure 4 is a horizontal section on the line 4—4 of Figure 1,

Figure 5 is a side elevation of the device mounted upon a pole but with the main bracket extending in the opposite direction for relation as compared with Figure 1,

Figure 6 is a cross section on the line 6—6 of Figure 5,

Figure 7 is a side elevation showing a slightly different arrangement of the parts,

Figure 8 is a detail view of the brace.

Referring more particularly to the drawings the letter A designates a pole carrying current carrying wires and B represents a transformer to be hoisted preparatory to mounting upon the pole. In carrying out my invention I provide a supporting bracket for block and tackle for facilitating hoisting the transformer or for hoisting anything else desired as there is no restriction whatever as to the use. The bracket structure comprises an elongated upright L-shaped arm 10 including a vertical portion 11 and a horizontally extending upper portion 12 which terminates in a hook 13 which might be formed integrally with the arm 12 or formed separately therefrom and secured thereto by any desired means which ever may be preferred.

For mounting this bracket upon the pole, I provide a pair of clamps which encircle the pole and which hold the bracket. The upper one of these clamps is designated by the numeral 14 and it is formed preferably as a casting including a body 15 terminating at one end in a yoke 16 which is curved to conform substantially to the pole and which terminates in laterally extending ears 17 formed with slots 18. The other end of the body is formed with an open sleeve 19 terminating in ears 20. The vertical arm 11 of the bracket is engaged within the sleeve 19 and is clamped therein by a suitable bolt 21 which passes through the holes in the ears 20 and which carries a nut 22.

In connection with the body 15 I provide a mating clamping member which is formed as a yoke 23 curved for engagement with the pole and mating with the yoke 16. The ends of this yoke terminate in ears 24 provided with slots 25 while the intermediate portion of the yoke is formed with a pair of spaced ears 26 apertured as shown. Pivotally connected with the free end portion of the horizontal arm 12 is a brace rod 27 which has its other end flattened and pivoted between the ears 26 by a bolt 28. For effecting the clamping action upon the pole I provide bolts 29 which pass through the slots 25 and 18 in the ears 24 and 17 respectively and which are equipped with nuts 30. In the modification shown in Figure 6 the bolts 29 are replaced by eyebolts 29^a equipped with nuts 30^a and connected by links 29^b.

The lower clamp 31 includes a body 32 terminating at one end in a yoke 33 which has one end formed with an apertured ear 34 and its other end formed with an ear 35

having an open ended slot 36 therein. Formed on the body is an open sleeve 37 terminating in apertured ears 38. The lower end of the vertical arm 11 of the bracket is engaged within the sleeve 37 and is clamped therein by a bolt 39 which passes through the ears 38. For holding this lower clamping member upon the pole I provide a chain 40 which has one end most link engaged within the apertured ear 34 and which has its other end engageable within the slot 36 of the ear 35.

In Figure 1 I have shown the device mounted upon the pole with the upper clamp 14 located above the cross arm E of the pole. The upper and lower clamps are engaged in embracing relation upon the pole, the upper clamp being held tight by the bolts 29 shown in Figure 3, or the bolts 29ª shown in Figure 6. The lower clamp is held in position by tightening the chain 40 and engaging one link thereof within the claw slot 36. To make use of the apparatus a suitable block and tackle C is engaged upon the hook 13 and the lower block of the tackle is equipped with a sling D or the like engaged upon the transformer or other object to be hoisted. Figure 1 shows the transformer as hoisted to a point adjacent the cross arm. The hook 13 is adjustably mounted upon the upper arm 12 of the main bracket 10 as clearly indicated in Figure 2.

In some other instances it is desirable that the upper arm 12 of the bracket extend away from the pole instead of across the top thereof as shown in Figure 1 and in such an event the arrangement may be as illustrated in Figure 5. This figure however, together with Figure 6, shows the two sections of the upper clamp 14 as connected by eye bolts which are in turn connected by links instead of using the ordinary bolts 29 as disclosed in Figure 3.

In Figure 7 the arrangement is substantially the same as in Figure 5 except that the main bracket 10 is slid downwardly with respect to the clamping members and the lower end of the brace 27 is connected between the ears 38 of the lower clamp instead of between the ears 20 of the upper clamp.

From the foregoing description and a study of the drawings it will be apparent that I have thus provided a simply constructed and consequently inexpensive device which is easily applied to a pole and which will efficiently operate to perform the functions for which it is intended so that it will be a great time and labor saver.

While I have shown and described the preferred embodiment of the invention it is of course to be understood that I reserve the right to make such changes in the form, construction and arrangement of parts as will not depart from the spirit of the invention or the scope of the subjoined claims.

Having thus described my invention I claim:

1. A derrick attachment for poles, comprising a pair of clamping members disposable against a pole in superposed relation, a clamping bearing on each clamping member, an inverted L-shaped member having its vertical leg adjustably engaged within said bearings, and a brace pivotally connected with the extremity of the horizontal arm and adapted for connection with one of the clamping members.

2. In a derrick attachment for poles, a pair of clamping members adapted for engagement upon a pole in superposed relation, each clamping member including an arm having a spilt bearing equipped with contracting means, an L-shaped derrick member having its vertical leg slidably and rotatably adjustable within said bearings and adapted to be secured in adjusted position by said contracting means, and a brace pivotally connected with the free end of the horizontal arm of the derrick member and engageable with a selected one of said contracting means for the bearings.

ERNEST J. HIRN.