(No Model.) 3 Sheets—Sheet 1.

F. CHASE.

LASTING MACHINE.

No. 545,052. Patented Aug. 27, 1895.

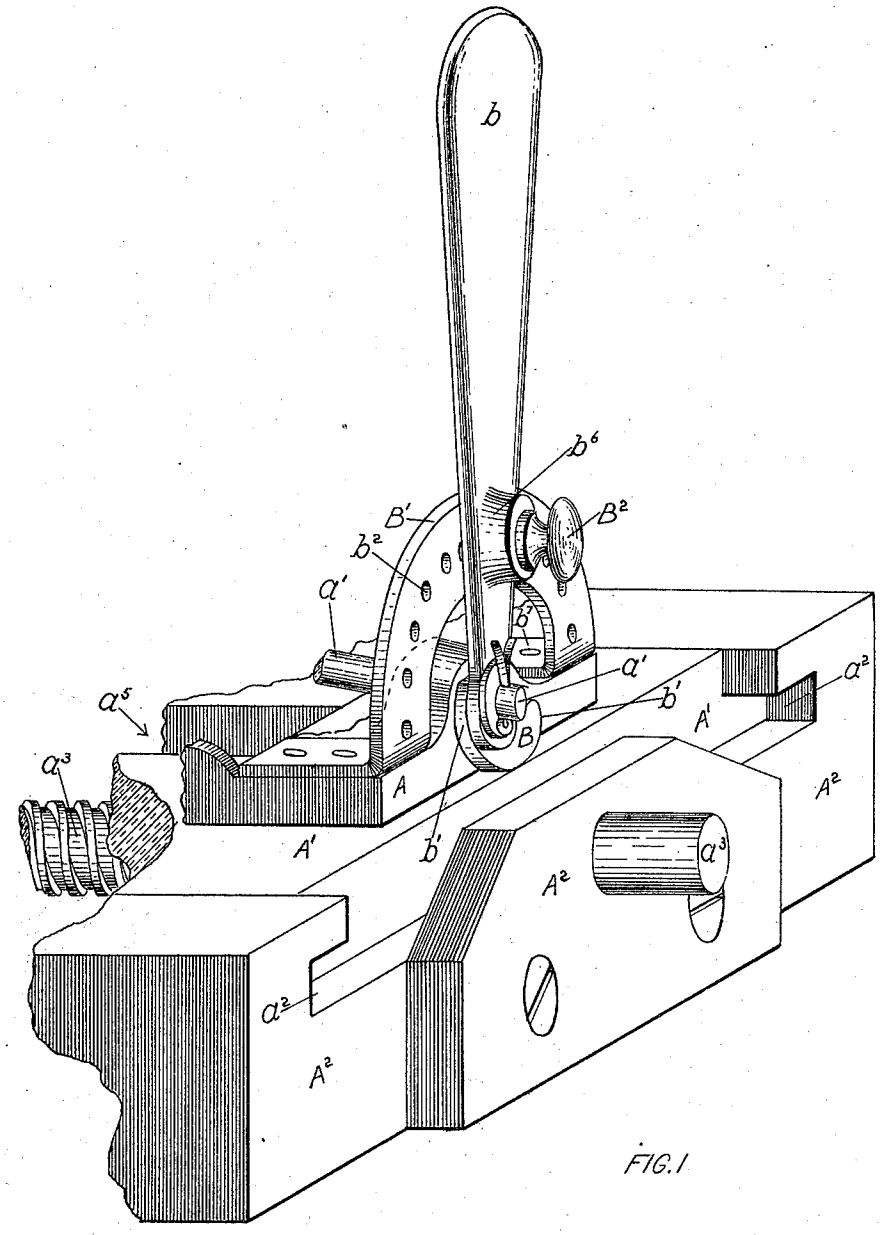

FIG. 1

WITNESSES:

W. Garratt Brewer

Charles P. Pearle.

INVENTOR

Frank Chase

BY

Edwor S. Beach.

ATTORNEY.

(No Model.) 3 Sheets—Sheet 2.

F. CHASE.

LASTING MACHINE.

No. 545,052. Patented Aug. 27, 1895.

FIG. 2

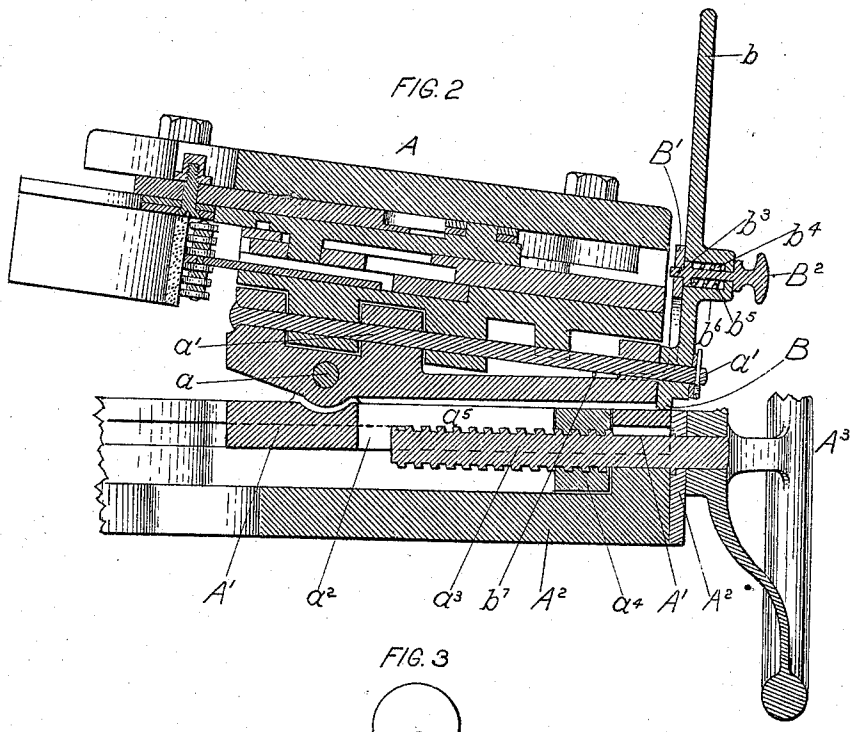

FIG. 3

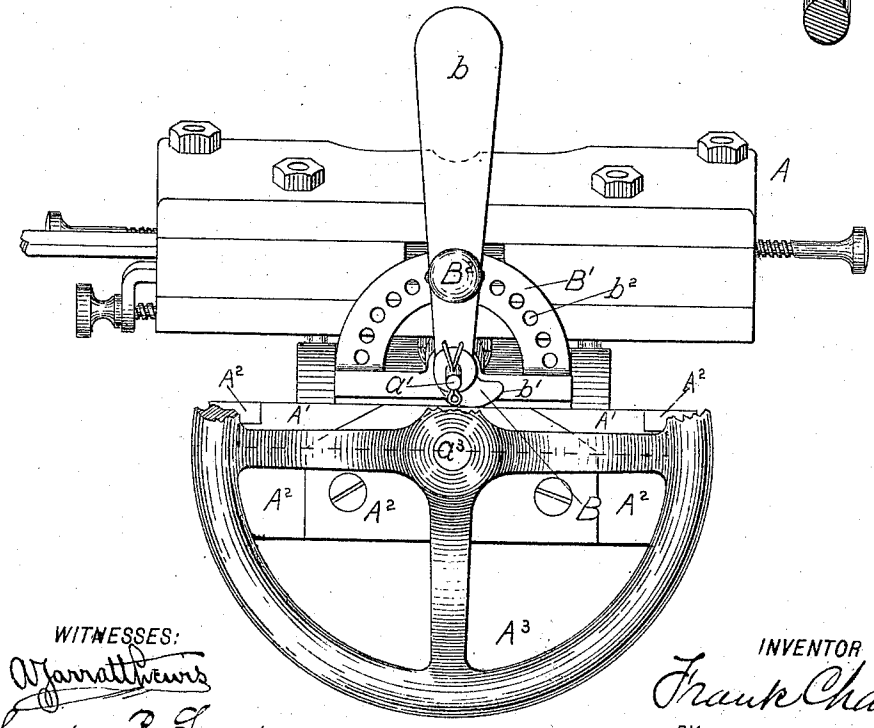

WITNESSES:

W. Garratt Peirce

Charles P. Pearle

INVENTOR

Frank Chase

BY

Edward S. Beach

ATTORNEY.

(No Model.) 3 Sheets—Sheet 3

F. CHASE.

LASTING MACHINE.

No. 545,052. Patented Aug. 27, 1895.

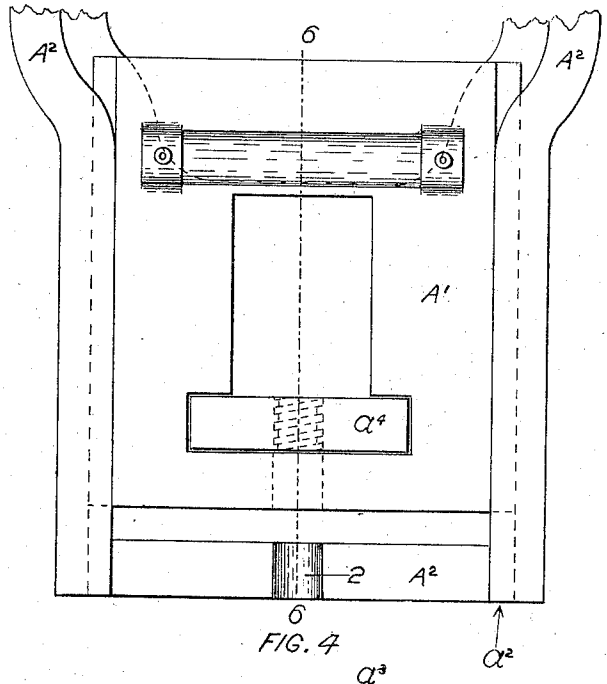

FIG. 4

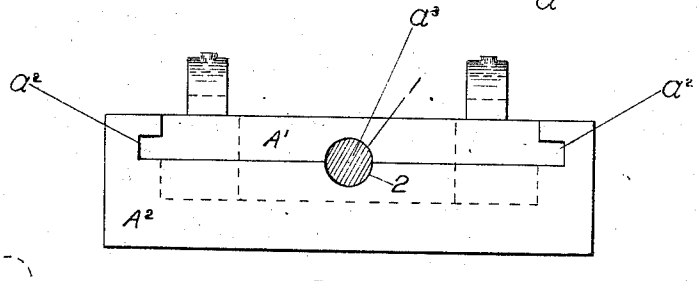

FIG. 5

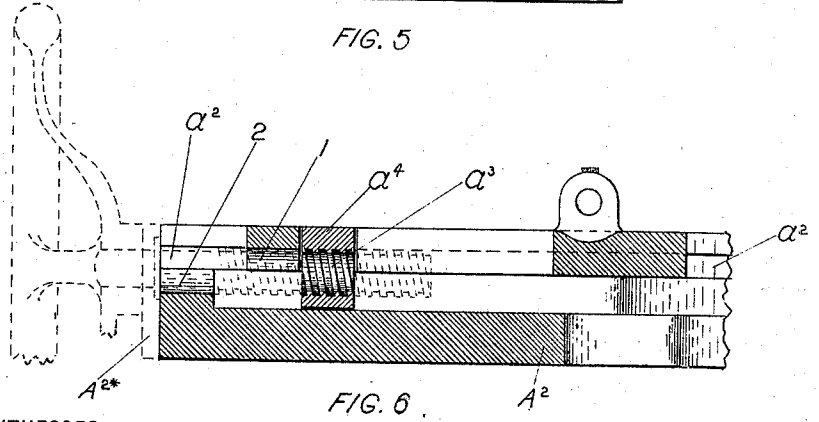

FIG. 6

WITNESSES:

W. Garratt Evans

A. J. Crawford.

INVENTOR

Frank Chase

BY

Edward S. Beach

ATTORNEY.

UNITED STATES PATENT OFFICE.

FRANK CHASE, OF WATERVILLE, MAINE, ASSIGNOR TO THE CHASE LASTING MACHINE COMPANY, OF BOSTON, MASSACHUSETTS.

LASTING-MACHINE.

SPECIFICATION forming part of Letters Patent No. 545,052, dated August 27, 1895.

Application filed November 19, 1894. Serial No. 529,238. (No model.)

To all whom it may concern:

Be it known that I, FRANK CHASE, of Waterville, in the county of Kennebec and State of Maine, have invented a new and useful Improvement in Machines for Lasting Boots and Shoes, of which the following is a specification, reference being had to the accompanying drawings, in which—

Figure 1 is a perspective view of my improvement disconnected from the old structure, to which it appertains. Fig. 2 is a central lengthwise section of the lasting-carriage of a lasting-machine with a part of the frame of the machine also in section, this sufficing to show the connection of my invention therewith. This view is taken at line 2 2 of Fig. 3, and is also a central sectional view of what is shown in the perspective, Fig. 1, except that in Fig. 1 the reciprocating plate to which the carriage is pivoted is shown moved slightly inwardly or away from the stop-plate, while in Fig. 2 the reciprocating plate abuts against the stop-plate. Fig. 3 is an end view of the lasting-carriage with my improvement, the adjustable carriage-tilter block, its handle, and locking mechanism in place. Fig. 4 is a top plan view of a portion of the main frame and reciprocating plate which supports the lasting-carriage, the latter being removed for clearness. Fig. 5 is a front end view of the reciprocating plate and of a portion of the main frame, showing the screw for reciprocating the plate in section. This view is taken at line 5 5 of Fig. 3, which cuts the screw and passes between the opposed surfaces of the stop-plate and main frame. Fig. 6 is a sectional view on line 6 6 of Fig. 4.

My invention relates to lasting-machines of the type illustrated in my Letters Patent No. 337,925, dated March 16, 1886, and is especially applicable to heel-and-toe mechanism of the type set forth in my patent, No. 364,088, dated May 31, 1887, although my invention may be embodied, if desired, in various other styles of machines.

It is of the utmost importance that machines for lasting boots and shoes should be of the greatest possible rapidity in operation and of simple mechanical construction in respect of those adjustments which are made by hand; and the object of my invention is to promote these two objects, that are of signal importance in the art.

My invention consists not only in an attachment for, first, tilting a lasting-carriage endwise by means of an adjustable tilter-block, which is of varying operative dimensions, and, second, for securing the tilter-block and consequently the lasting-carriage in adjusted position during the lasting operation, but also in certain combinations hereinafter set forth.

In the drawings, illustrating the preferred and, on the whole, the best of several contemplated embodiments of my invention, A is so much of the lasting-carriage of known construction as is necessary to an understanding of my improvement, which, though capable of embodiment in many different kinds of lasting-machines, yet forms an attachment for the well-known "Chase lasting-machine." This carriage, whether provided with heel or toe lasting instrumentalities, has an endwise tilting movement on its cross-pin a, and it may be mentioned, incidentally, that it has a sidewise tilting or rocking movement on the lengthwise pin a'. Carriage A is supported on a reciprocating plate A′, which is mounted in suitable ways a^2 in the frame A^2 of the machine, as plainly shown in Fig. 1, plate A′ being reciprocated and moved into any desired position by screw a^3 through block a^4 in recess a^5 of plate A′. Block a^4 is threaded for the passage of screw a^3, as shown in Figs. 2 and 4, in which figures plate A′, on which and with which tilter-block B moves, (see Fig. 1,) is shown in contact with the plate A^{2*}, which is a stop-plate, against which plate A′ brings up at its extreme outward position. Plate A′ is formed with a concave recess 1 on its under face, this recess being coincident, when the plate is in ways a^2, with the recess 2 in frame A^2. The hole formed by the coincident recesses 1 and 2 forms a bearing for the shank portion 3 of screw a^3, as will be plain from Fig. 5. A wheel A^3 is provided for operating screw a^3 to adjust plate A′ and carriage A endwise. These parts are old and well known.

In practice it is necessary to tilt the inner end of the lasting-carriage A (and the lasting instrumentalities carried by it) into various positions, depending upon the contour or an-

gle of slope of the sole-piece of the boot or shoe to be operated upon, as will be readily understood by all skilled in the art without further explanation. To accomplish this adjustment, I employ a carriage tilter-block B of varying operative dimensions. Adjustment of tilter-block B moves the outer end of carriage A, and consequently the inner or work end of the carriage, into a higher or lower position, as required. Tilter-block B is adjusted into any desired position by means of an arm or handle *b* attached to tilter-block B, this tilter-block being preferably of cam form, as shown, and pivoted to carriage A by the pin *a'*. Plate A' forms a suitable rest for the working surface *b'* of the tilter-block as the plate moves with carriage A. The rest for the tilter-block should move with the lasting-carriage, in order that the tilter-block may not be dragged over its rest when the carriage is reciprocated. It is important that the tilter-block should be locked in its adjusted positions during the operation of the parts carried by the lasting-carriage, and I accordingly provide a graduated locking-plate B, into perforations b^2 of which the spring-bolt b^3, which is mounted on arm or handle *b*, snaps when the handle is moved over the locking plate. Bolt b^3 is formed with a head B^2 for convenience and is moved outwardly in its socket b^4 in arm or handle *b* against the tension of a spring b^5, best mounted in shell b^6. Locking-plate B' is preferably formed with inwardly-bent projections b^7 for convenient attachment to lasting-carriage A at b^8. A pull or push upon handle *b* moves the tilter-block, the work surface of which moves on its rest formed by plate A', and the lasting-carriage is tilted as required, the locking-bolt snapping into a hole b^2 in the locking-plate when the handle ceases to move, and the tilter-block, and consequently the lasting-carriage, being thereby secured in any desired position, the spring-bolt b^3 being released from its position in a hole b^2 prior to pushing or pulling the handle *b*.

It will be plain to all skilled in the art that the tilter-block may be of various shapes and that my improvement may be altered in mechanical details without departure from my invention. I have used the term "of varying operative dimensions" in connection with the tilter-block, deeming that expression apt for description of the essential point involved in the cam as an element of my improvement.

What I claim is—

1. In a machine for lasting boots and shoes, the combination of a tilting, reciprocating lasting-carriage with a tilter-block of varying operative dimensions and reciprocating with the lasting-carriage and means, substantially such as described, for adjusting the tilter-block and securing it in an adjusted position; said carriage being formed with a rest for the tilter-block and adjustment of the tilter-block tilting the lasting carriage into a desired position, all substantially as and for the purpose set forth.

2. In a machine for lasting boots and shoes, the combination of a tilting, reciprocating lasting-carriage with a tilter-block; and a rest therefor moving with the carriage; a handle for the tilter-block and means for securing the tilter-block in desired position; said block being of varying operative dimensions and adjustable to tilt the lasting-carriage, all substantially as and for the purpose set forth.

3. In a machine for lasting boots and shoes, the combination of a tilting, reciprocating lasting-carriage, with a cam-shaped tilter-block pivoted on the carriage; a perforated locking-plate attached to the carriage; an arm projecting from the cam-shaped tilter-block and a spring controlled locking-bolt mounted in said arm, the arm being movable over the face of the locking-plate and the spring bolt entering a perforation in the locking-plate, whereby the lasting-carriage is tilted into and secured in any desired position; substantially as and for the purpose set forth.

4. As a new article of manufacture, the herein described attachment for machines for lasting boots and shoes, said attachment comprising a perforated locking-plate; a tilter-block of varying operative dimensions; a handle for said block; a pivoted connection for said block, the pivoted connection being extended to form the lengthwise pin on which the carriage rocks sidewise, and a spring-controlled locking-bolt mounted in said handle, substantially as and for the purpose set forth.

FRANK CHASE.

Witnesses:
H. D. BATES,
L. B. SPENCER.