(No Model.) 2 Sheets—Sheet 1.

C. E. GOULD.

BALL GRINDING MACHINE.

No. 431,163. Patented July 1, 1890.

Fig. 1.

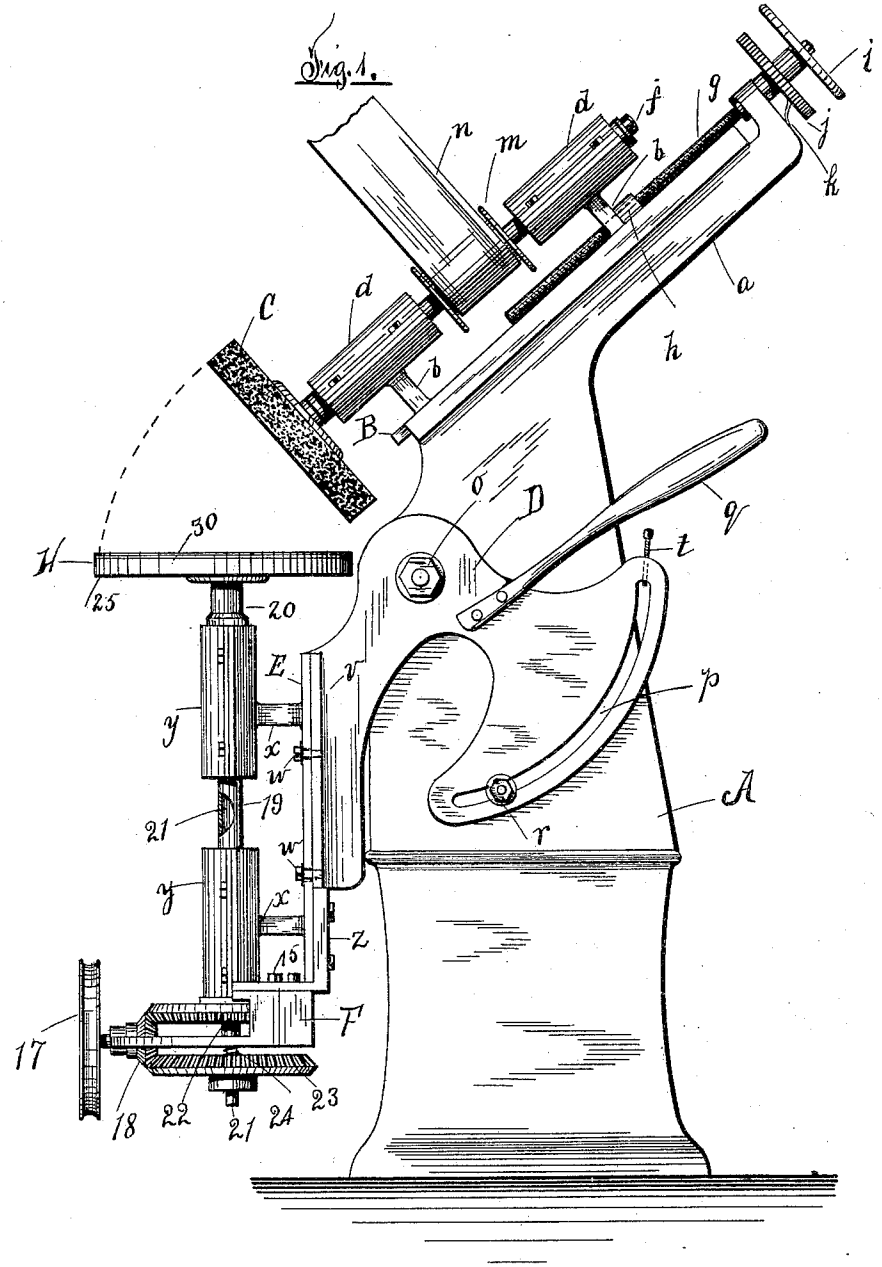

Witnesses
Walter S. Bowen
H. Dwyer

Inventor
Charles E. Gould,
By his Attorneys
C. A. Seward & Co.

THE NORRIS PETERS CO., PHOTO-LITHO., WASHINGTON, D. C.

(No Model.) 2 Sheets—Sheet 2.

C. E. GOULD.

BALL GRINDING MACHINE.

No. 431,163. Patented July 1, 1890.

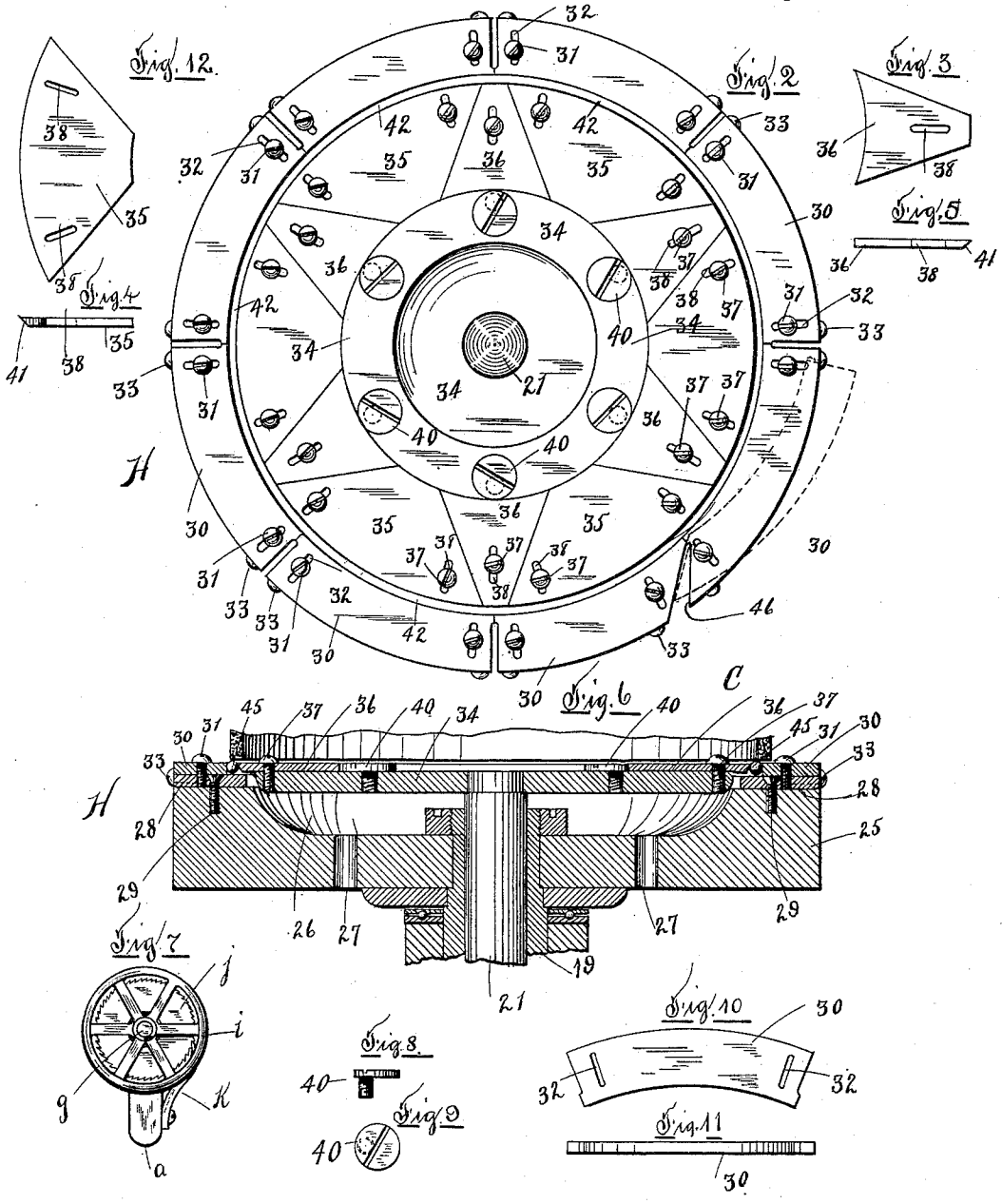

Witnesses
Walter S. Bowen
A. Dunfee.

Inventor
Charles E. Gould.
By his Attorneys
C. A. Shawkee.

THE NORRIS PETERS CO., PHOTO-LITHO., WASHINGTON, D. C.

UNITED STATES PATENT OFFICE.

CHARLES E. GOULD, OF LEOMINSTER, MASSACHUSETTS, ASSIGNOR TO THE GOULD ROLLING MACHINE COMPANY, OF SAME PLACE.

BALL-GRINDING MACHINE.

SPECIFICATION forming part of Letters Patent No. 431,163, dated July 1, 1890.

Application filed November 7, 1889. Serial No. 329,504. (No model.)

To all whom it may concern:

Be it known that I, CHARLES E. GOULD, of Leominster, in the county of Worcester, State of Massachusetts, have invented certain new and useful Improvements in Ball-Grinding Machines, of which the following is a description sufficiently full, clear, and exact to enable any person skilled in the art or science to which said invention appertains to make and use the same, reference being had to the accompanying drawings, forming part of this specification, in which—

Figure 1 is a side elevation of my improved ball-grinding machine; Fig. 2, a top plan view of the table or ball-holder enlarged; Figs. 3 and 5 and 4 and 12, respectively, top plan views and edge elevations of the adjustable holder-plates attached; Fig. 6, a central vertical transverse section of the table, the grinding-disk being shown as broken off; Fig. 7, an end elevation showing the hand-wheel and ratchet of the grinder-worm; Figs. 8 and 9, respectively, a side elevation and plan view of the eccentric adjusting-screws detached, and Figs. 10 and 11 a plan view and edge elevation of one of the outer face or holder plates detached.

Like letters and figures of reference indicate corresponding parts in the different figures of the drawings.

My invention relates to grinding-machines which are especially adapted for grinding spherical-rolled forgings; and it consists in certain novel features, hereinafter fully set forth and claimed, the object being to produce a simpler, cheaper, and more effective device of this character than is now in ordinary use.

The nature and operation of the improvement will be readily understood by all conversant with such matters from the following explanation:

In the drawings, A represents a vertical standard, which comprises the body of the machine and supports the working parts. A diagonally-arranged arm *a* projects laterally from the top of the body A, its upper face being grooved longitudinally to form a run or way in which a carriage B is fitted to slide. This carriage is provided with two vertical standards *b*, each bearing a journal *d* at its top, in which a shaft *f* is fitted to rotate, said shaft being arranged in parallelism with the diagonal body-arm *a*.

In the outer end of the arm *a*, a worm *g* is fitted to revolve, and passes through a nut *h*, secured to the carriage B and adapted to travel on said worm. The worm is provided with a hand-wheel *i* at its upper end, and with a ratchet *j*, with which a spring-pawl *k* on the arm *a* engages.

A pulley *m* is secured to the shaft *f*, between the journals *d*, and a driving-belt *n* passes over said pulley. On the lower end of the shaft *f* a tubular or cylindrical grinder C is secured centrally, said grinder being composed of emery compound or similar suitable material.

A large lever D, similar in shape to a bell-crank lever, is pivoted at *o* to a side of the body A, and is adapted to swing vertically in the same vertical plane as the shaft *f*. One arm of said lever is provided with a handle *q* and an arc slot *p*, through which a set-screw *r* passes into the body A. A screw *t* passes into the upper end of the arc slot and serves as a stop for engaging the set-screw *r* and regulating the length of the lever-stroke. The opposite arm of the lever D is provided with a vertical face-plate *v*, to which a vertically-adjustable bracket E is secured by screws *w*. The bracket E is provided with horizontal arms *x*, bearing vertical journals *y*. To the lower end of the bracket E a vertically-adjustable angle-iron *z* is fastened, to which a horizontally-adjustable bracket F is secured by bolts 15. In the outer end of the bracket F a horizontal stub-shaft is journaled and bears a grooved pulley 17 on its outer end and a beveled pinion 18 on its inner end. A sleeve 19 is fitted to rotate in the journals *y*, and is provided with a supporting-shoulder 20 near its upper end. A horizontally-arranged beveled gear is secured to the lower end of the sleeve 19, and meshes with the pinion 18 on its upper side. A vertically-arranged shaft 21 is fitted to rotate in the sleeve 19, the lower end of said shaft being reduced to form a shoulder at 22, and passing through the bracket F. Below said bracket a horizontally-arranged beveled gear 23 is secured to the shaft and meshes with the pinion 18

on its under side, said pinion when in motion driving said sleeve 19 and shaft 21 in diametrically opposite directions. A coiled spring 24, disposed around the shaft 21, between the bracket F and gear 23, prevents it from riding upward.

The ball-holder H, which is mounted on the upper end of the shaft 21 and sleeve 19, is constructed as follows: A horizontally-arranged disk 25 (see Fig. 6) rests centrally on a shoulder on the upper portion of the sleeve 19, and is held in position by a check-nut turned onto the threaded upper end of said sleeve. The central portion of the upper face of the disk is depressed at 26, forming a receptacle to receive the dust or powder from the balls. Ducts or openings 27 for the discharge of the same lead from said receptacle through the bottom of said disk. A flat ring or annulus 28, which forms a bed-plate for the balls when being ground, is secured to the upper face of the disk 25 by screws 29. A series of flat segmental plates 30, having their parallel edges formed on arcs of the same circle as the disk 25, are secured to the upper face of the annulus 28, with their outer edges in the same vertical plane. These plates are adjustable laterally by means of set-screws 31, which pass through radial slots 32 in each end thereof into the bed-plate or ring 28, and are held in position when so adjusted by set-screws 33 passing horizontally into said ring 28 and segmental plates. A disk 34 is mounted on the upper end of the shaft 21, the upper face of said disk being in the same horizontal plane as the corresponding face of the ring 28. The disk 34 is slightly less in diameter than the depression 26 in the disk 25, as shown in Fig. 6.

A series of triangular or wedge-shaped segmental plates 35 and 36 have two opposite edges parallel and formed on arcs of circles having the same center as the disks 25 and 34. These plates alternate with each other and are adjustably and conjointly arranged on the upper face of the disk 34, so that their outer edges project beyond the periphery of said disk over the ring 28 and together form a complete circle parallel with that formed by the inner edges of the segmental plates 30, as shown in Fig. 2. The plates 35 and 36 are adjustable radially on their disk, by means of set-screws 37 and radial slots 38, in the same manner as the plates 30 described. The plates 36 serve as wedges for spreading the alternate plates 35, and are actuated by screws 40 turned into the disk 34. Said screws are provided with heads (see Figs. 8 and 9) disposed eccentrically on their shanks. The screws 40 are placed in the central radial line of the wedge-plates 36, and when rotated their heads act as cams for forcing said plates outward. The outer edges of the plates 35 and 36 are beveled inwardly at 41, (see Figs. 4, 5, and 6,) and the space 42 between the adjacent edges of the outer plates 30 and inner plates 35 and 36 forms an annular race in which the balls 45 travel. Two of the plates 30 have their adjacent ends cut away, as shown at 46 in Fig. 2, to allow one of said plates to be swung outwardly into the position shown by dotted lines in said figure, and thus afford sufficient space for the insertion of the balls 45 into the race 42. When so inserted, the balls project slightly above the upper edges of the race.

Power being applied to the grooved pulley 17, the disks 34 and 25, attached, respectively, to the shaft 21 and sleeve 19, are rotated thereby in opposite directions. An eccentric rotary movement is thereby imparted to the balls 45, the beveled edges of the plates on the disk 34 engaging said balls above their horizontal diameter. The handle q is now depressed to move the lever D and elevate the holder H into a plane parallel with the rotating grinder C, which comes into contact with said balls, said lever being held in this position by means of the set-screw r. The shaft of the holder H is so arranged that when elevated, as described, it is sufficiently out of alignment with the grinder-shaft to render said grinder slightly eccentric in relation to the ball-race. This permits the contact of the balls to be distributed over the whole working-face of the grinder and prevents them from wearing a groove therein. By imparting opposite rotary movements to the walls of the race, as described, the balls are caused to rotate far more rapidly and in more directions than when rotated solely by the grinder and a ball-revolver in vertical alignment, as is customary in machines of this class, thus producing much more accurate spheres.

The side walls of the race being horizontally adjustable, as described, renders the device operative when the balls vary greatly in size. The worm g is provided with an exceedingly-fine thread, and the ratchet j thereon with correspondingly-fine teeth, enabling the degree of contact of the grinder with the balls to be very finely adjusted. The race-walls being formed from a series of adjustable plates, the wear of any portion thereof may readily be compensated for. The diagonal arrangement of the grinder and means for elevating and lowering the ball-holder greatly facilitate the adjustment of the balls in the race and effect a saving of time in operating the machine.

Having thus explained my invention, what I claim is—

1. In a ball-grinding machine, a body, a rotary grinder diagonally arranged and longitudinally adjustable thereon, and a vertically-adjustable rotary holder provided with a ball-race and pivoted to said body, substantially as and for the purpose set forth.

2. In a ball-grinding machine, a body, a diagonally-arranged shaft journaled in a carriage fitted to slide thereon and bearing a cylindrical grinder, a worm for adjusting said

carriage longitudinally, and a rotary holder provided with an annular ball-race and journaled on a lever pivoted to said body, substantially as and for the purpose set forth.

3. In a ball-grinding machine, a body, a rotary holder provided with an annular ball-race, said holder comprising an inner and outer disk mounted, respectively, on a shaft and inclosing-sleeve, mechanism for conjointly rotating the shaft and sleeve in opposite directions, a diagonally-rotating grinder, and a lever supporting the holder mechanism and pivoted on said body, substantially as described.

4. A rotary ball-holder for ball-grinding machines, provided with an annular race, said holder comprising an inner and outer disk mounted, respectively, on a rotary shaft and encircling rotary sleeve, and race-plates laterally adjustable on said disks, the edges of said plates forming the side walls of said race, substantially as described.

5. A rotary holder for ball-grinding machines, comprising an inner and outer disk mounted, respectively, on a rotary shaft and encircling sleeve, and laterally-adjustable plates on said disks, the adjacent edges of which form the side walls of an annular ball-race, one of said plates on the outer disk being pivoted to swing outward, substantially as described.

6. In a ball-grinding machine, a body, a diagonally-arranged rotary grinder adjustable longitudinally thereon, a rotary holder provided with an annular ball-race, the side walls of said race being fitted to rotate in opposite directions, and a lever on said body for elevating the holder, substantially as described.

7. In a ball grinding machine, the combination of a body, a diagonal rotary shaft journaled on a carriage fitted to slide on said body, a cylindrical grinder on said shaft, a worm for adjusting said carriage, a lever pivoted on said body and means for securing it in position, a holder provided with an annular ball-race and comprising an inner and outer disk, respectively, fixed on a shaft and rotary encircling sleeve mounted in journals vertically adjustable on an arm of said lever, and a stub-shaft on the lever bearing a pinion meshing with gears on said holder-shaft and sleeve, whereby they may be rotated in opposite directions, substantially as and for the purpose set forth.

8. In a ball-grinding machine provided with a rotary cylindrical grinder, a holder provided with an annular ball-race having laterally-adjustable side walls, mechanism for rotating said walls in opposite directions, and means, substantially as described, for moving said holder into parallelism with the grinder and with its race eccentric in relation to the working-face of said grinder.

9. The holder H, comprising the disk 25, provided with the radially-adjustable race-plates 30, and the disk 34, provided with radially-adjustable race-plates 35 and 36, in combination with mechanism, substantially as described, for rotating said plates in opposite directions.

10. The holder H, comprising the disk 25, having the depression 26 and ducts 27, and provided with the annulus 28 and adjustable race-plates 30, the disk 34, provided with adjustable wedge-shaped race-plates 35 and 36, and the cam-screws 40, said disks being mounted to rotate in opposite directions, substantially as and for the purpose set forth.

11. In a ball-holder for grinding-machines, a ball-race having its side walls formed from two series of segmental plates, respectively, adjustable radially on oppositely-rotating disks, substantially as described.

12. In a ball-grinding machine, the holder H, provided with the radially-adjustable race-plates 35 and 36, in combination with the screws 40, having eccentric or cam heads in engagement with said plates 36, substantially as set forth.

13. In a ball-grinding machine, a body, a rotary ball-holder mounted on a bell-crank lever pivoted to said body and vertically adjustable thereon, said holder being provided with two series of race-plates rotatable in opposite directions, a stop for said lever, a rotary cylindrical grinder mounted on a diagonally-arranged shaft on said body, a sliding carriage for said shaft, and a worm for adjusting said shaft longitudinally, substantially as and for the purpose set forth.

CHARLES E. GOULD.

Witnesses:
F. J. WOODBURY,
C. E. DRESSER.