US009528376B2

(12) **United States Patent**
Race et al.

(10) **Patent No.: US 9,528,376 B2**
(45) **Date of Patent: Dec. 27, 2016**

(54) **COMPRESSOR FAIRING SEGMENT**

(75) Inventors: **Nathan Stafford Race**, Simpsonville, SC (US); **Brian Denver Potter**, Greer, SC (US)

(73) Assignee: **GENERAL ELECTRIC COMPANY**, Schenectady, NY (US)

(*) Notice: Subject to any disclaimer, the term of this patent is extended or adjusted under 35 U.S.C. 154(b) by 1030 days.

(21) Appl. No.: **13/613,043**

(22) Filed: **Sep. 13, 2012**

(65) **Prior Publication Data**

US 2014/0069101 A1 Mar. 13, 2014

(51) **Int. Cl.**

F01D 5/06	(2006.01)
F01D 5/14	(2006.01)
F01D 5/30	(2006.01)
F04D 29/52	(2006.01)
F04D 29/56	(2006.01)

(52) **U.S. Cl.**

CPC ***F01D 5/06*** (2013.01); ***F01D 5/143*** (2013.01); ***F01D 5/3007*** (2013.01); ***F04D 29/522*** (2013.01); ***F04D 29/563*** (2013.01)

(58) **Field of Classification Search**

CPC F01D 11/001; F01D 11/02; F01D 5/06; F01D 5/066; F01D 5/3007; F01D 5/3015; F01D 5/3069; F01D 5/32; F01D 5/323; F01D 5/326; F01D 5/143; F04D 29/083; F04D 29/122; F04D 29/321; F04D 29/322; F04D 29/522; F04D 29/541; F04D 29/563

USPC ..... 416/198 A, 200 A, 201 R; 415/173.7, 415/170.1

See application file for complete search history.

(56) **References Cited**

U.S. PATENT DOCUMENTS

941,389	A	*	11/1909	Snyder	F01D 5/06 416/198 R
943,480	A	*	12/1909	Snyder	F01D 5/06 416/198 R
2,656,147	A	*	10/1953	Brownhill	F01D 5/084 416/193 A
2,662,685	A	*	12/1953	Blanc	F01D 5/066 416/198 R
2,773,667	A	*	12/1956	Wheatley	F01D 11/001 415/136
2,786,625	A	*	3/1957	Kent	F01D 5/06 416/201 R
2,869,820	A	*	1/1959	Marchant	F01D 5/06 416/201 R
2,892,583	A	*	6/1959	Clarke	F01D 5/06 29/889.21
3,035,759	A	*	5/1962	Paulson	F01D 5/06 415/111
3,094,309	A	*	6/1963	Hull, Jr.	F01D 5/06 415/173.7

(Continued)

FOREIGN PATENT DOCUMENTS

EP	0718469	6/1996
EP	1004750	5/2000
EP	1582700 A2	5/2005

Primary Examiner — Gregory Anderson
Assistant Examiner — Wayne A Lambert
(74) *Attorney, Agent, or Firm* — Dority & Manning, PA

(57) **ABSTRACT**

A compressor fairing segment includes a body having an upstream surface, a downstream surface, and opposing side surfaces between the upstream and downstream surfaces. A first detent on the upstream surface is shaped to conform to a first complementary fitting inside a compressor. A second detent on the downstream surface shaped to conform to a second complementary fitting inside the compressor.

18 Claims, 8 Drawing Sheets

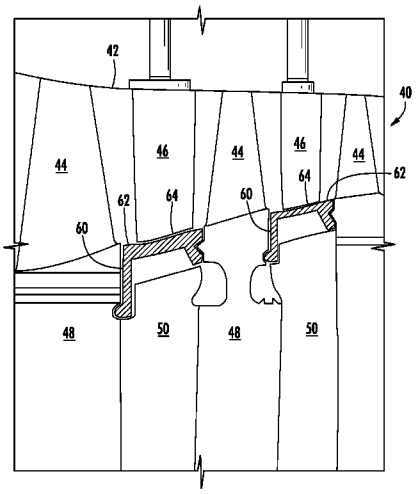

(56) **References Cited**

U.S. PATENT DOCUMENTS

3,295,825 A * 1/1967 Hall, Jr. F01D 5/06 415/173.7
3,754,766 A * 8/1973 Asplund F16J 15/0887 277/644
3,867,063 A * 2/1975 Bulavin F01D 9/042 415/138
4,005,946 A * 2/1977 Brown F01D 11/18 415/136
4,127,359 A * 11/1978 Stephan ..... F01D 11/005 416/198 A
4,311,432 A * 1/1982 Kildea F01D 11/08 415/134
4,432,697 A * 2/1984 Miura F01D 5/06 415/199.5
4,551,064 A * 11/1985 Pask F01D 11/08 415/115
4,553,901 A * 11/1985 Laurello F01D 11/24 415/116
5,080,556 A * 1/1992 Carreno F16J 15/442 277/590
5,161,949 A * 11/1992 Brioude ..... F01D 5/22 416/193 A
5,211,407 A 5/1993 Glynn et al.
5,370,501 A * 12/1994 Udall F01D 5/30 416/216
5,562,404 A 10/1996 Koff et al.
5,738,490 A * 4/1998 Pizzi F01D 11/005 415/139
5,842,831 A * 12/1998 Galke ..... F01D 5/08 416/198 A
5,860,789 A * 1/1999 Sekihara ..... F01D 5/066 416/201 R
5,950,308 A 9/1999 Koff et al.
6,139,264 A 10/2000 Schilling
6,315,519 B1 * 11/2001 Bagepalli F01D 11/08 415/135
6,692,228 B2 * 2/2004 Turnquist F01D 5/08 29/889
6,808,363 B2 * 10/2004 Darkins, Jr. F01D 11/005 277/630
6,811,375 B2 * 11/2004 Brisson F01D 11/001 415/173.7
6,821,085 B2 * 11/2004 Darkins, Jr. F01D 11/08 415/116
6,893,214 B2 * 5/2005 Alford F01D 9/04 415/138
7,118,335 B2 10/2006 Vacarezz et al.
7,278,820 B2 * 10/2007 Keller F01D 11/08 415/173.1
7,320,574 B2 * 1/2008 Greim F01D 5/225 415/170.1
7,494,317 B2 * 2/2009 Keller F01D 11/025 415/135
7,510,369 B2 3/2009 Lytle
7,588,415 B2 9/2009 Giaiamo et al.
7,628,579 B2 12/2009 Giaiamo et al.
7,665,959 B2 2/2010 Giaimo et al.
7,690,889 B2 4/2010 Giamo et al.
7,726,936 B2 * 6/2010 Keller F01D 11/12 415/173.4
7,753,647 B2 7/2010 Giamo et al.
7,854,586 B2 12/2010 Major et al.
7,901,178 B2 3/2011 Giaimo et al.
8,016,297 B2 9/2011 Heinemann et al.
8,092,157 B2 1/2012 McCaffrey
8,105,024 B2 1/2012 Khanin et al.
2003/0082049 A1 * 5/2003 Brisson F01D 11/003 415/173.7
2006/0045747 A1 3/2006 Martin et al.
2006/0228210 A1 * 10/2006 Bachofner F01D 5/06 415/174.4
2011/0052387 A1 * 3/2011 Kneeland F01D 5/141 415/208.1
2011/0255977 A1 * 10/2011 Bhagavatheeswaran F01D 5/066 416/198 A

* cited by examiner

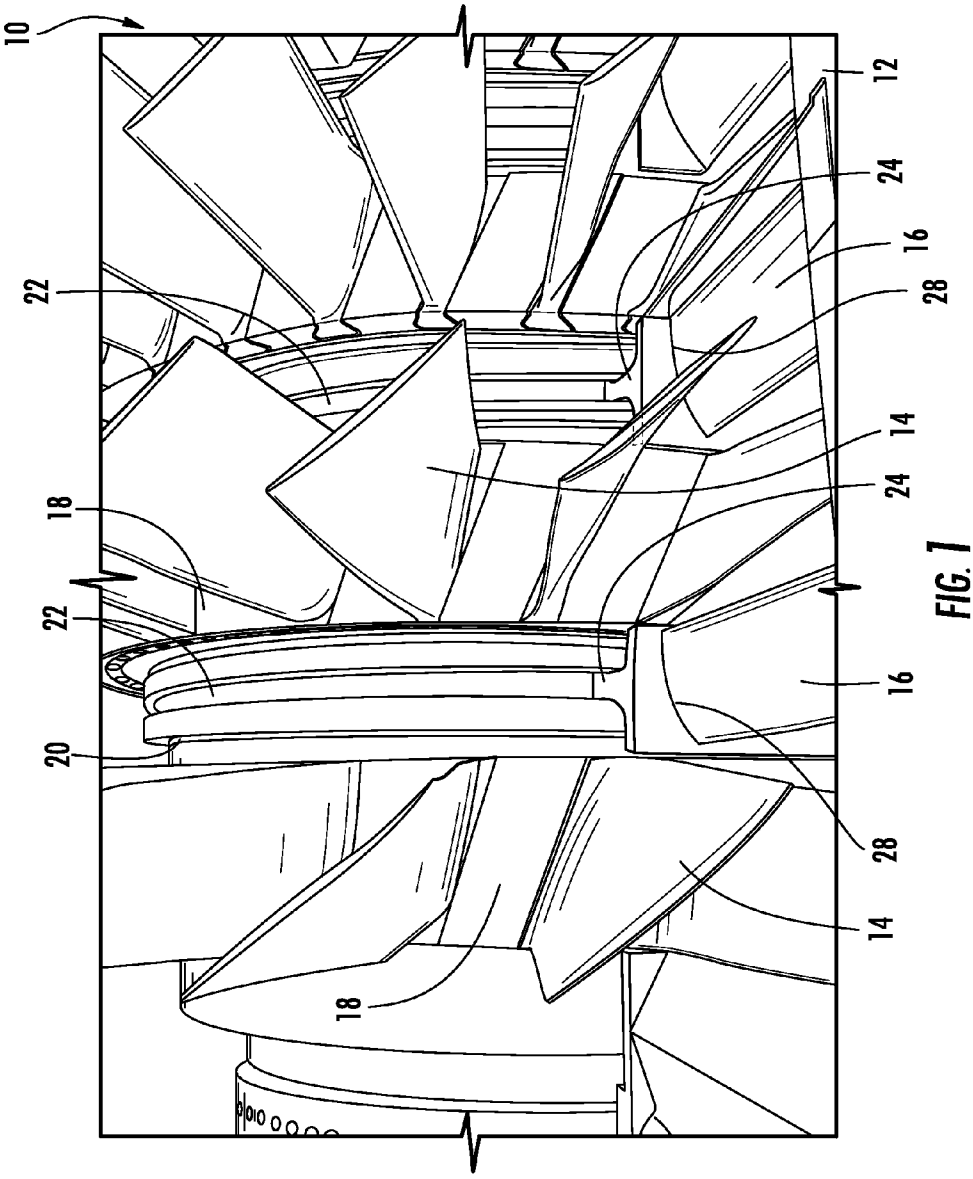

FIG. 1
(PRIOR ART)

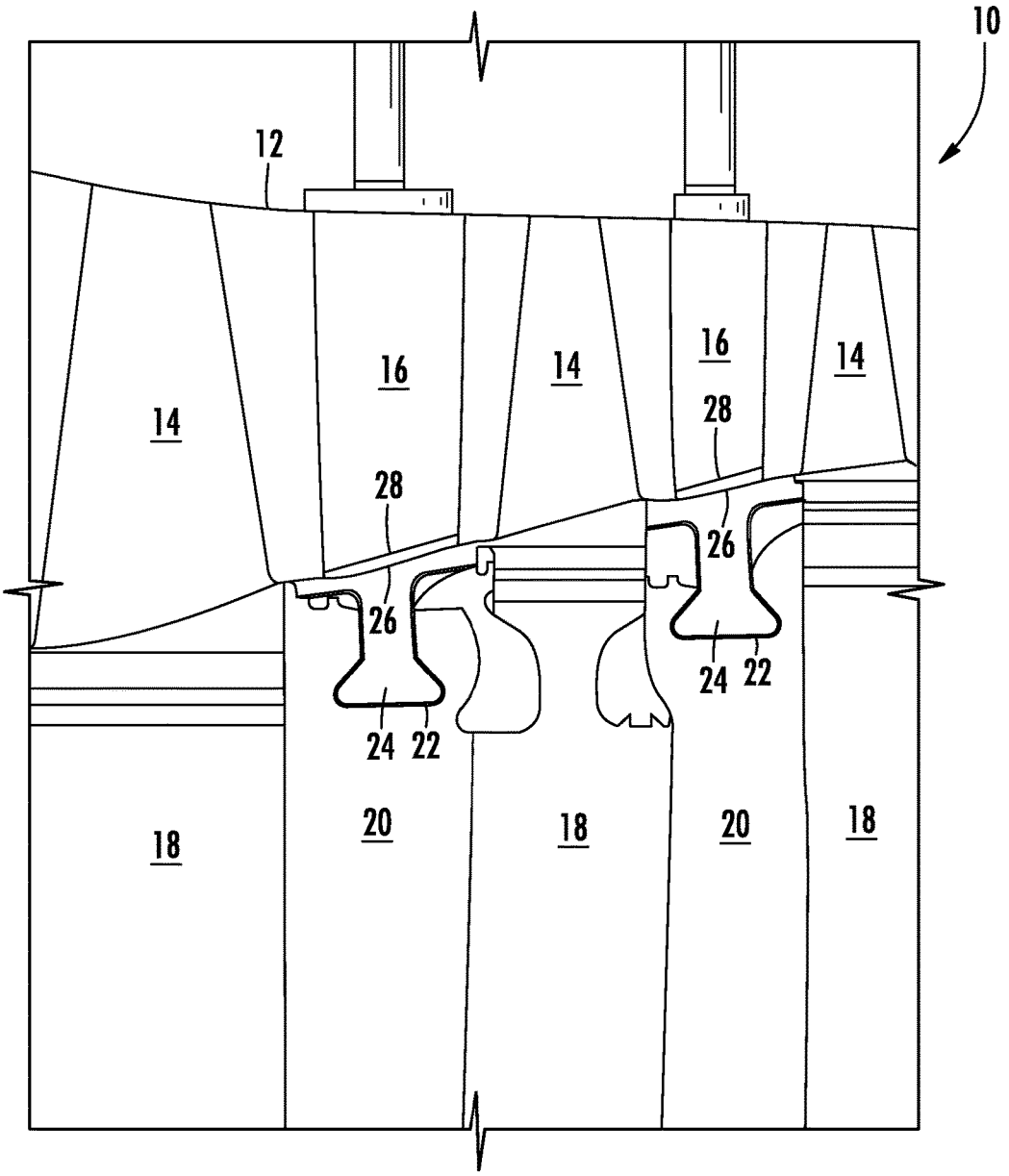

FIG. 2
(PRIOR ART)

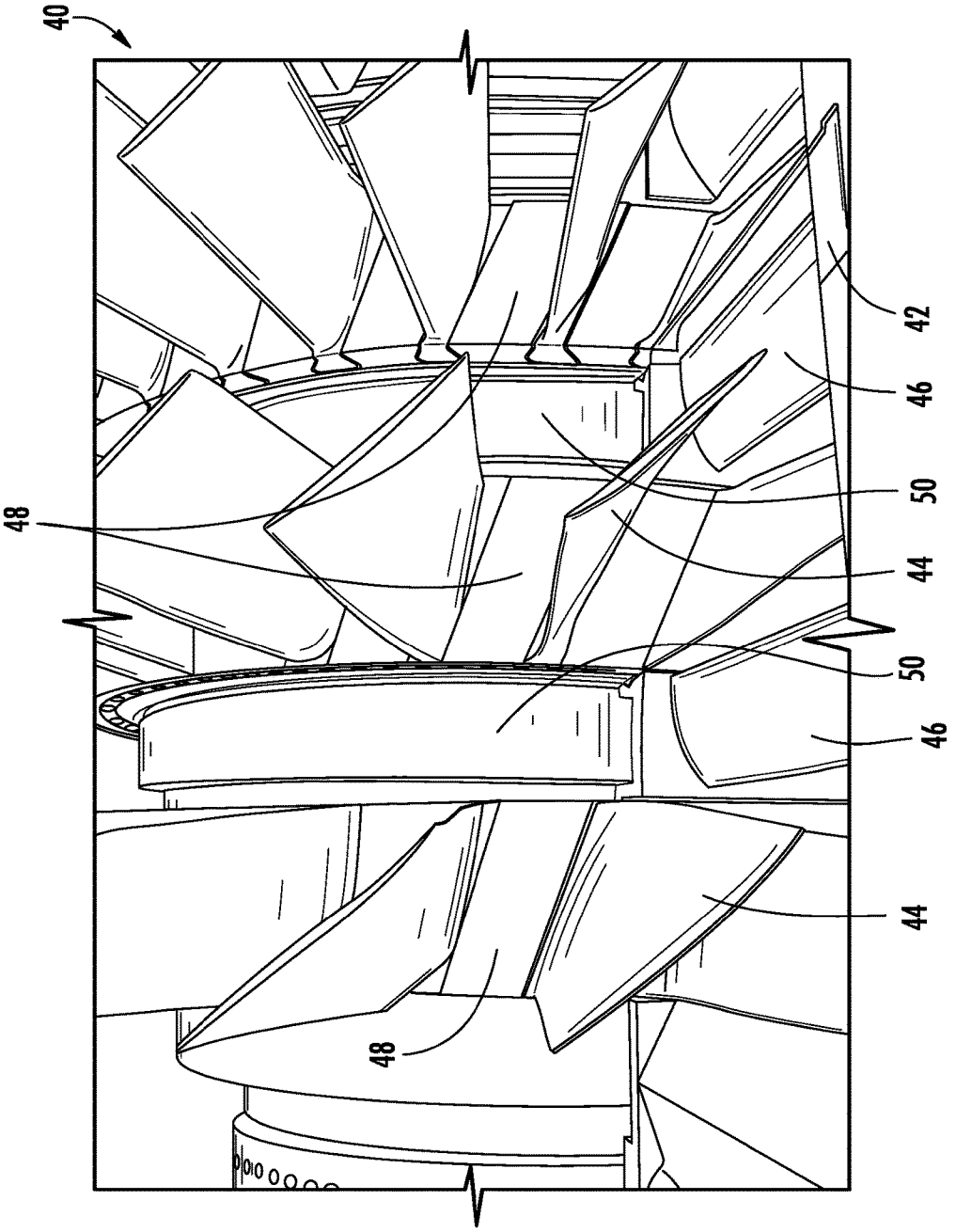

FIG. 3

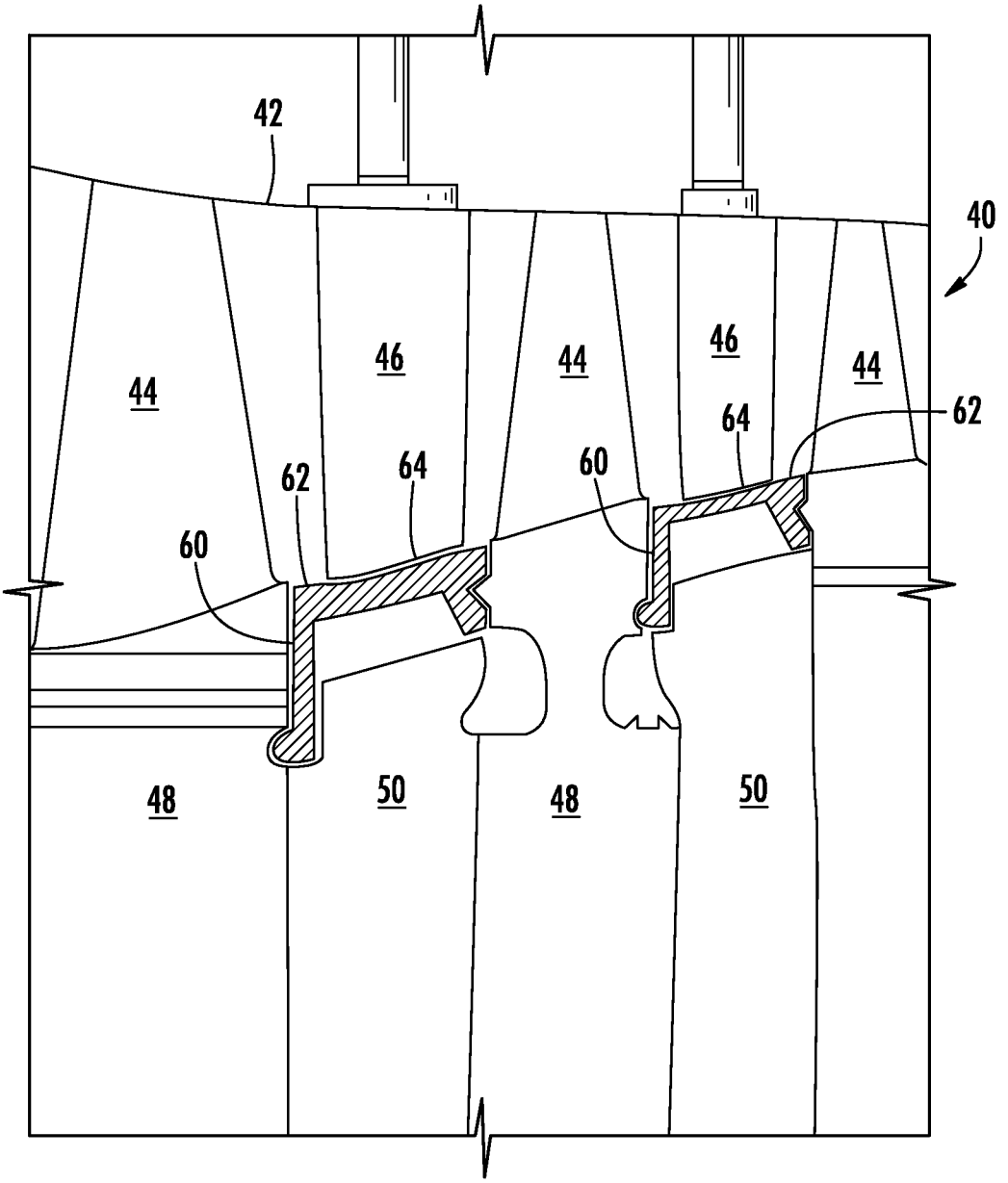

FIG. 4

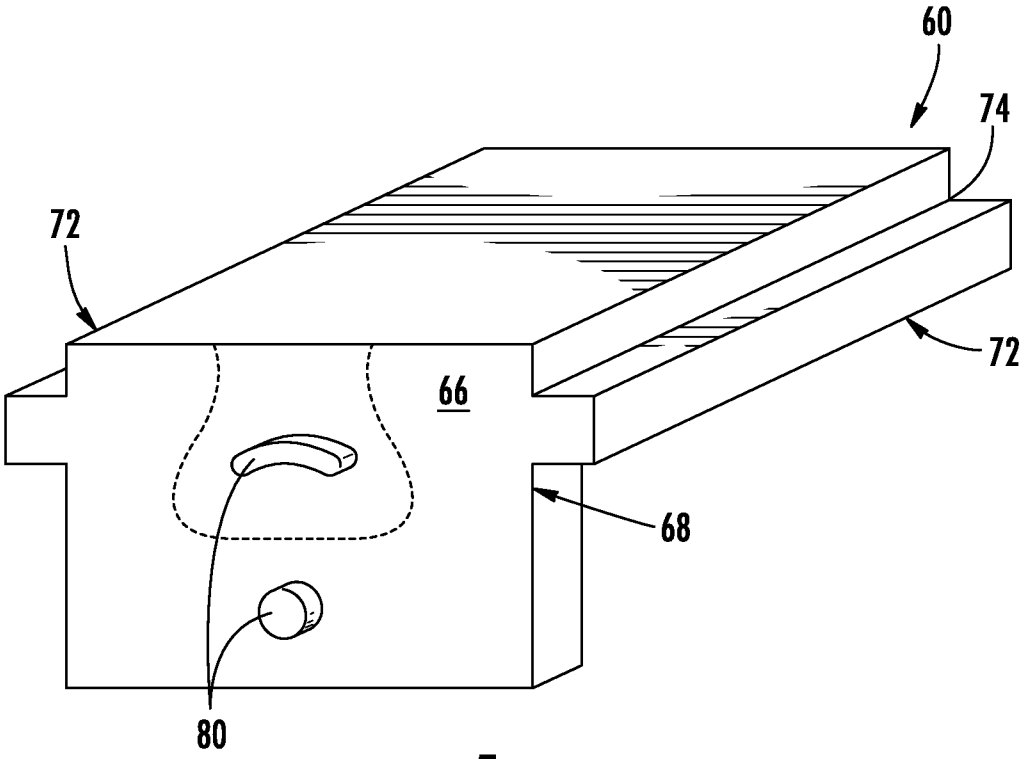

FIG. 5

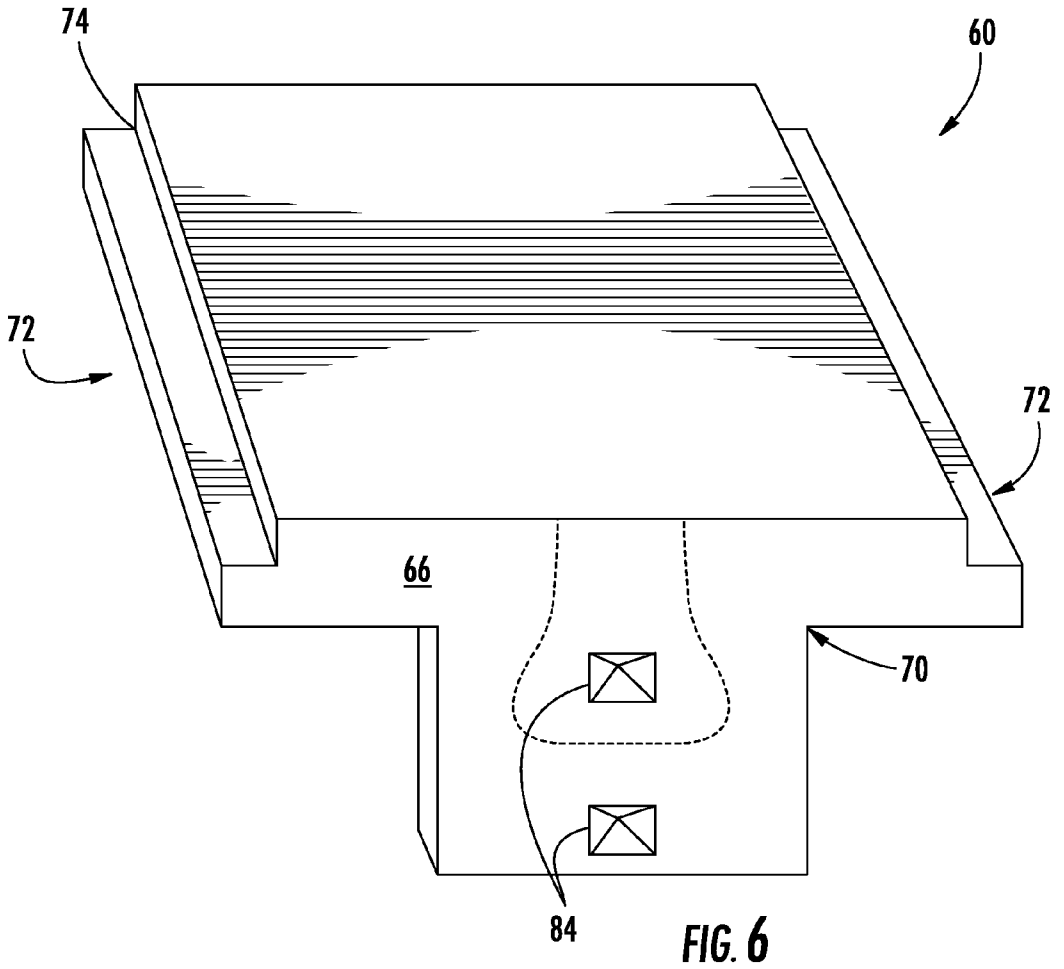

FIG. 6

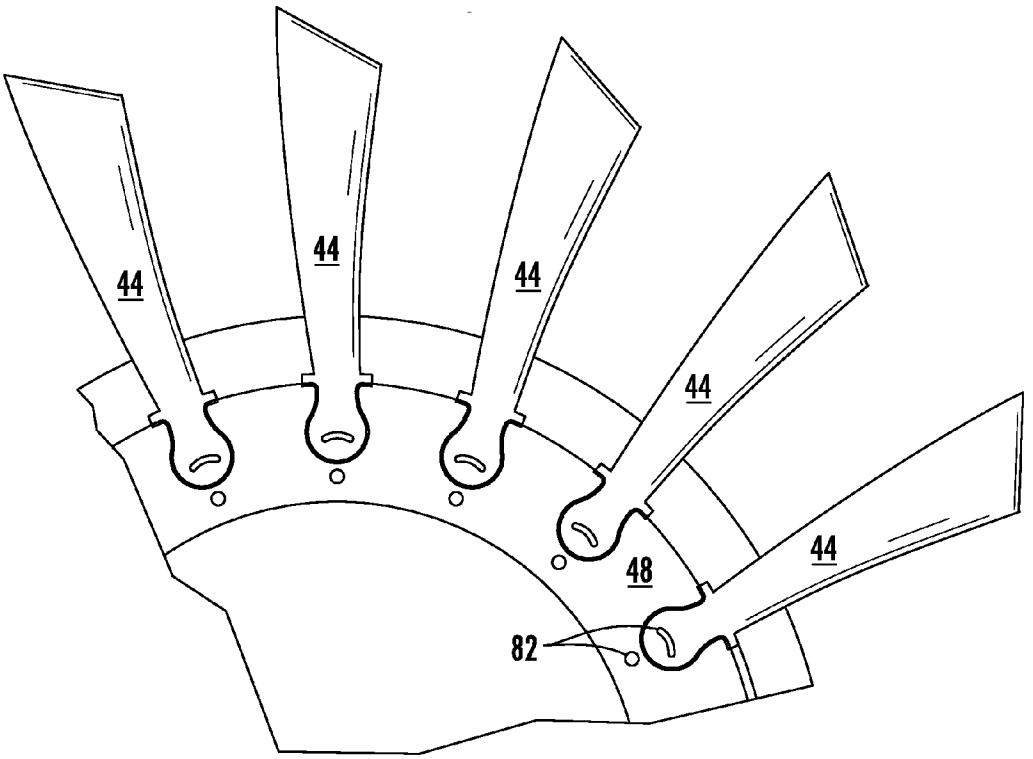

FIG. 7

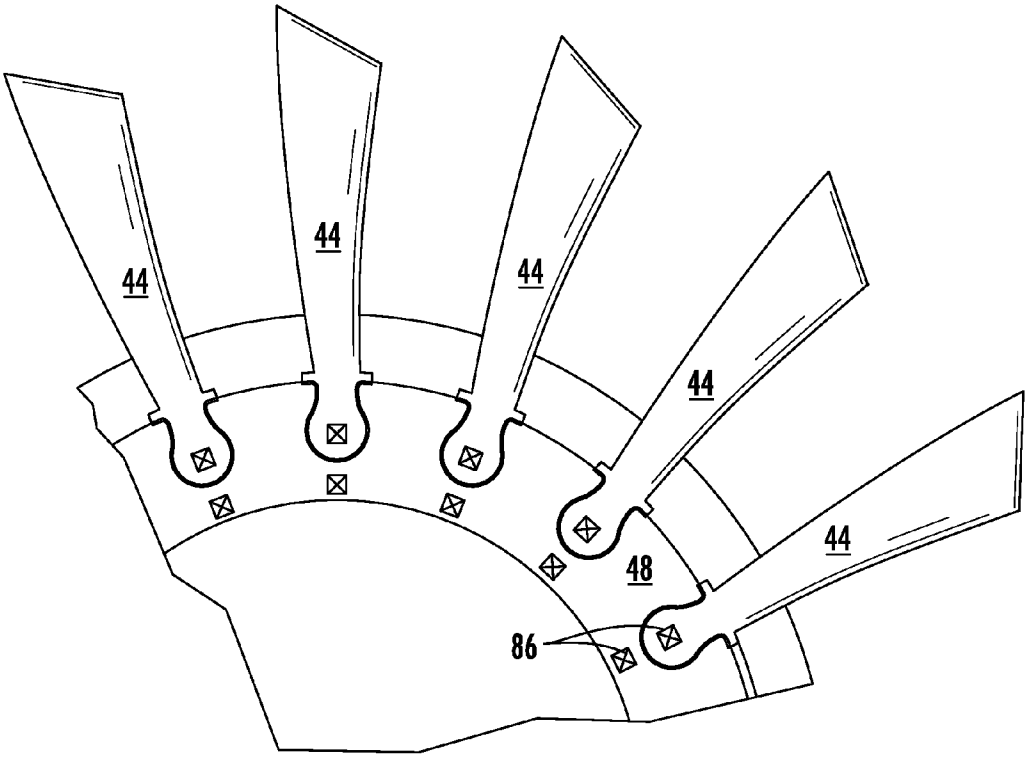

FIG. 8

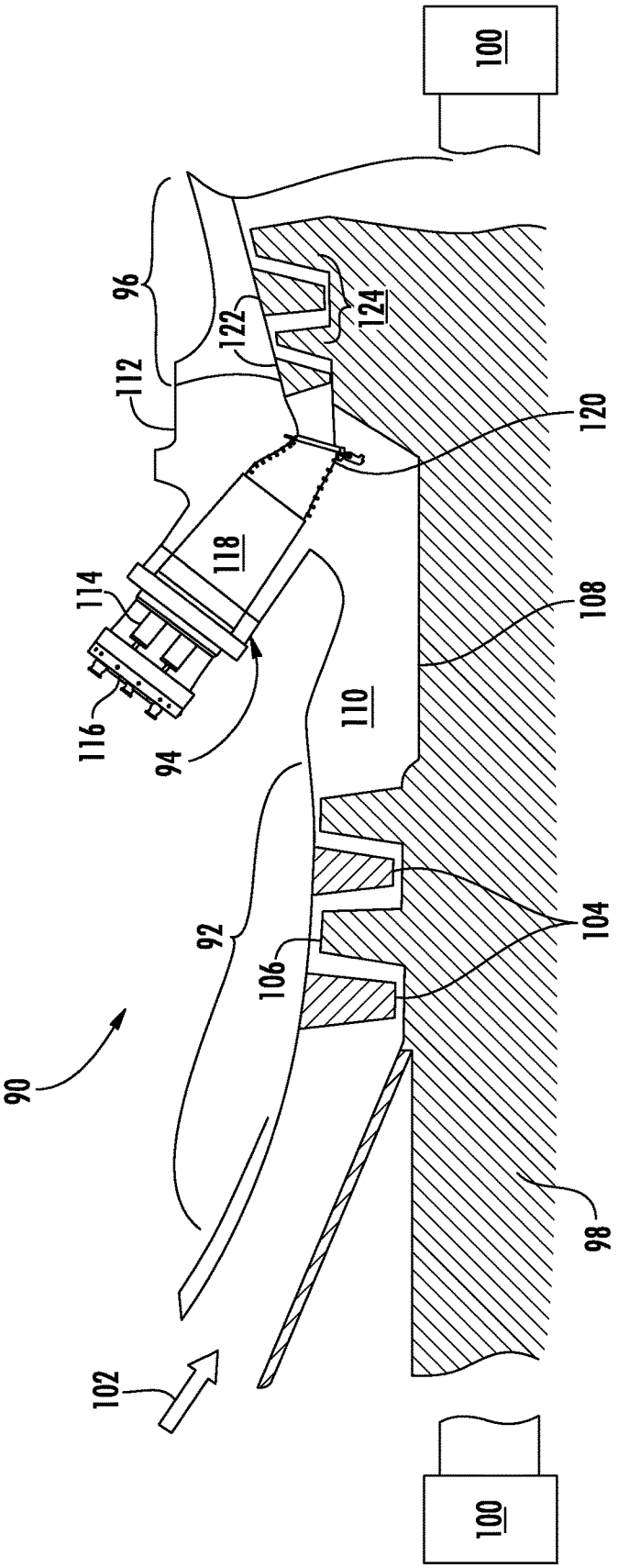
100
96
112
122
124
114
118
120
116
94
110
108
92
106
104
90
98
102
100

FIG. 9

COMPRESSOR FAIRING SEGMENT

FIELD OF THE INVENTION

The present invention generally involves a fairing segment. In particular embodiments, a plurality of the fairing segments may be incorporated into a compressor.

BACKGROUND OF THE INVENTION

Compressors are widely used in industrial and commercial operations. For example, a typical commercial gas turbine used to generate electrical power includes an inlet section, a compressor section downstream from the inlet section, a combustion section downstream from the compressor section, a turbine section downstream from the combustion section, and an exhaust section downstream from the turbine section. The inlet section purifies and otherwise conditions a working fluid (e.g., air) that flows into the compressor section. The compressor section produces a compressed working fluid that flows to the combustion section where it mixes with fuel before combusting to produce combustion gases having a high temperature and pressure. The combustion gases flow through the turbine section to produce work, and the exhaust section purifies and otherwise conditions the combustion gases prior to further use and/or discharge to the environment.

FIG. **1** provides a perspective view of an exemplary prior art compressor **10**, and FIG. **2** provides a side cross-section view of the exemplary compressor **10** shown in FIG. **1**. As shown in FIGS. **1** and **2**, a casing **12** generally surrounds the compressor **10** to contain a working fluid (e.g., air), and a portion of the casing **12** has been removed in FIG. **1** to expose the components inside the compressor **10**. Alternating stages of rotating blades **14** and stator vanes **16** inside the casing **12** progressively impart kinetic energy to the working fluid to produce a compressed working fluid at a highly energized state. Each rotating blade **14** may be circumferentially arranged around a rotor wheel **18** to extend radially outward toward the casing **12**. Conversely, each stator vane **16** may be circumferentially arranged around the casing **12** to extend radially inward toward a spacer wheel **20** that separates adjacent stages of rotating blades **14**.

Compressed working fluid that leaks around or bypasses the stator vanes **16** reduces the efficiency of the compressor **10**. As a result, some compressors may include inner shroud segments or fairing segments to reduce the amount of compressed working fluid that flows between the stator vanes **16** and the spacer wheel **20**. For example, as shown most clearly in FIG. **2**, the spacer wheels **20** radially inward from the stator vanes **16** may include circumferential dovetail slots **22** adapted to receive T-shaped fairing segments **24**. The circumferential dovetail slots **22** radially restrain the T-shaped fairing segments **24**, and the T-shaped fairing segments **24** include a surface **26** that generally conforms to an inner tip **28** of the stator vanes **16** to reduce leakage between the stator vanes **16** and the spacer wheels **20**. Although the T-shaped fairing segments **24** are effective at reducing leakage between the stator vanes **16** and the spacer wheels **20**, the circumferential dovetail slots **22** in the spacer wheels **20** may reduce the high cycle fatigue limit of the spacer wheels **20**. As a result, an improved fairing segment that does not require slots in the spacer wheels would be useful.

BRIEF DESCRIPTION OF THE INVENTION

Aspects and advantages of the invention are set forth below in the following description, or may be obvious from the description, or may be learned through practice of the invention.

One embodiment of the present invention is a compressor fairing segment that includes a body having an upstream surface, a downstream surface, and opposing side surfaces between the upstream and downstream surfaces. A first detent on the upstream surface is shaped to conform to a first complementary fitting inside a compressor. A second detent on the downstream surface shaped to conform to a second complementary fitting inside the compressor.

Another embodiment of the present invention is a compressor fairing segment that includes a body having an upstream surface, a downstream surface, and opposing side surfaces between the upstream and downstream surfaces. The compressor fairing segment further includes first means for retaining the upstream surface against at least one of a first rotor wheel or a first rotating blade inside a compressor and second means for retaining the downstream surface against at least one of a second rotor wheel or a second rotating blade inside the compressor.

The present invention may also include a gas turbine having a compressor section with a first rotor wheel, a first stage of rotating blades circumferentially arranged around the first rotor wheel, a second rotor wheel downstream from the first rotor wheel, and a second stage of rotating blades circumferentially arranged around the second rotor wheel. A plurality of fairing segments extend between the first rotor wheel and the second rotor wheel. Each fairing segment includes a first detent shaped to conform to a first complementary fitting on at least one of the first rotor wheel or a first rotating blade in the first stage of rotating blades and a second detent shaped to conform to a second complementary fitting on at least one of the second rotor wheel or a second rotating blade in the second stage of rotating blades. A combustion section is downstream from the compressor section, and a turbine section is downstream from the combustion section.

Those of ordinary skill in the art will better appreciate the features and aspects of such embodiments, and others, upon review of the specification.

BRIEF DESCRIPTION OF THE DRAWINGS

A full and enabling disclosure of the present invention, including the best mode thereof to one skilled in the art, is set forth more particularly in the remainder of the specification, including reference to the accompanying figures, in which:

FIG. **1** is a perspective view of an exemplary prior art compressor with the casing removed;

FIG. **2** is a side cross-section view of the exemplary compressor shown in FIG. **1**;

FIG. **3** is a perspective view of an exemplary compressor with the casing removed according to one embodiment of the present invention;

FIG. **4** is a side cross-section view of the exemplary compressor shown in FIG. **3**;

FIG. **5** is a downstream perspective view of a fairing segment shown in FIGS. **3** and **4** according to one embodiment of the present invention;

FIG. **6** is an upstream perspective view of the fairing segment shown in FIG. **5**;

FIG. **7** is an upstream perspective view of a rotor wheel shown in FIGS. **3** and **4**;

FIG. **8** is a downstream perspective view of the rotor wheel shown in FIG. **7**; and

FIG. **9** is a cross section view of an exemplary gas turbine incorporating any embodiment of the present invention.

DETAILED DESCRIPTION OF THE INVENTION

Reference will now be made in detail to present embodiments of the invention, one or more examples of which are illustrated in the accompanying drawings. The detailed description uses numerical and letter designations to refer to features in the drawings. Like or similar designations in the drawings and description have been used to refer to like or similar parts of the invention. As used herein, the terms "first", "second", and "third" may be used interchangeably to distinguish one component from another and are not intended to signify location or importance of the individual components. In addition, the terms "upstream" and "downstream" refer to the relative location of components in a fluid pathway. For example, component A is upstream from component B if a fluid flows from component A to component B. Conversely, component B is downstream from component A if component B receives a fluid flow from component A.

Each example is provided by way of explanation of the invention, not limitation of the invention. In fact, it will be apparent to those skilled in the art that modifications and variations can be made in the present invention without departing from the scope or spirit thereof. For instance, features illustrated or described as part of one embodiment may be used on another embodiment to yield a still further embodiment. Thus, it is intended that the present invention covers such modifications and variations as come within the scope of the appended claims and their equivalents.

Various embodiments of the present invention include one or more fairing segments that may be incorporated into a compressor to enhance the efficiency of the compressor. The compressor generally includes alternating stages of rotating blades and stator vanes, as is known in the art. Each fairing segment generally extends between adjacent stages of rotating blades and includes various means for holding the fairing segment in place. In particular embodiments, each fairing segment may include a surface that conforms to an inner tip of the stator vanes, and a plurality of the fairing segments may be circumferentially arranged around a rotor wheel between adjacent stages of rotating blades to reduce the amount working fluid that may bypass a stage of stator vanes. Although exemplary embodiments of the present invention will be described generally in the context of a compressor incorporated into a gas turbine for purposes of illustration, one of ordinary skill in the art will readily appreciate that embodiments of the present invention may include and/or be incorporated into any compressor unless specifically recited in the claims.

FIG. **3** provides a perspective view of an exemplary compressor **40** according to one embodiment of the present invention, and FIG. **4** provides a side cross-section view of the exemplary compressor **40** shown in FIG. **3**. As shown in FIGS. **3** and **4**, a casing **42** generally surrounds the compressor **40** to contain a working fluid (e.g., air), and a portion of the casing **42** has been removed in FIG. **3** to expose the components inside the compressor **40**. Alternating stages of rotating blades **44** and stator vanes **46** inside the casing **42** progressively impart kinetic energy to the working fluid to produce a compressed working fluid at a highly energized state. Each rotating blade **44** may be circumferentially arranged around a rotor wheel **48** to extend radially outward toward the casing **42**. Conversely, each stator vane **46** may be circumferentially arranged around the casing **42** to extend radially inward toward a rotor wheel **50** that separates adjacent stages of rotating blades **44**. The rotor wheels **48**, **50** may be sequentially connected together to collectively form a rotor along an axial centerline of the compressor **40**.

As shown in FIGS. **3** and **4**, a plurality of fairing segments **60** may extend between rotor wheels **48** of adjacent stages of rotating blades **44**. Each fairing segment **60** may include various means for holding the fairing segment **60** in place between adjacent stages of rotating blades **44**. In addition, as shown most clearly in FIG. **4**, the fairing segments **60** may be circumferentially arranged around the rotor wheels **50** that separate adjacent stages of rotating blades **44**, and each fairing segment **60** may include or define a surface **62** that conforms to an inner tip **64** of the stator vanes **46**. In this manner, the fairing segments **60** may reduce the amount of compressed working fluid that bypasses the stator vanes **46** between the inner tips **64** of the stator vanes **46** and the rotor wheel **50**.

FIGS. **5** and **6** provide downstream and upstream perspective views, respectively, of the fairing segment **60** shown in FIGS. **3** and **4** according to one embodiment of the present invention. As shown in FIGS. **5** and **6**, the fairing segment **60** generally includes a body **66** having an upstream surface **68**, a downstream surface **70**, and opposing side surfaces **72** between the upstream and downstream surfaces **68**, **70**. The upstream surface **68** is generally narrower than the downstream surface **70** to conform to the generally increasing diameter of the compressor **40** in the downstream direction, although such is not a limitation of the present invention unless specifically recited in the claims. In addition, the opposing side surfaces **72** may further include a groove, ledge, rabbet **74**, or similar structure for providing a smooth, complementary fitting between adjacent fairing segments **60**.

FIG. **7** provides an upstream perspective view of the rotor wheel **48** immediately upstream from the fairing segment **60**, and FIG. **8** provides a downstream perspective view of the rotor wheel **48** immediately downstream from the fairing segment **60**. As shown in FIGS. **5-8**, the fairing segment **60** may further include first means for retaining the upstream surface **68** against the adjacent rotating blade **44** and/or rotor wheel **48** (shown in FIG. **7**) and second means for retaining the downstream surface **70** against the adjacent rotating blade **44** and/or rotor wheel **48** (shown in FIG. **8**). The function of the first and second means is to prevent inadvertent circumferential and/or radial movement of the upstream and/or downstream surfaces **68**, **70** of the fairing segment **60** with respect to the respective adjacent rotating blade **44** and/or rotor wheel **48** during operation, thereby retaining or holding the fairing segment **60** in place. The structure associated with the first and second means may include any device, fitting, or mechanism known in the art for holding or retaining one component against another component. For example, the structure associated with the first and second means may include any combination of adhesive, bolts, screws, hasps, clamps, detents, and/or complementary fittings in one or more of the rotating blades **44**, rotor wheels **48**, upstream surface **68**, and/or downstream surface **70**. In the particular embodiment shown in FIGS. **5** and **7**, for example, the structure associated with the first means may include one or more detents or projections **80** on the upstream surface **68** (shown in FIG. **5**) shaped to

conform to complementary fittings or recesses **82** in the adjacent rotating blade **44** and/or rotor wheel **48** (shown in FIG. **7**). Similarly, referring to the particular embodiment shown in FIGS. **6** and **8**, the structure associated with the second means may include one or more detents or recesses **84** on the downstream surface **70** (shown in FIG. **6**) shaped to cover and/or conform to complementary fittings or projections **86** in the adjacent rotating blade **44** and/or rotor wheel **48** (shown in FIG. **8**). One of ordinary skill in the art will readily appreciate from the teachings herein that multiple combinations of detents, fittings, projections, and recesses may provide suitable structure for the first and/or second means, and the present invention is not limited to any particular combination unless specifically recited in the claims.

FIG. **9** provides a simplified cross-section view of an exemplary gas turbine **90** that may incorporate various embodiments of the present invention. As shown, the gas turbine **90** may generally include a compressor section **92** at the front, a combustion section **94** radially disposed around the middle, and a turbine section **96** at the rear. The compressor section **92** and the turbine section **96** may share a common rotor **98** connected to a generator **100** to produce electricity.

The compressor section **92** may include an axial flow compressor in which a working fluid **102**, such as ambient air, enters the compressor and passes through alternating stages of stationary vanes **104** and rotating blades **106**. A compressor casing **108** may contain the working fluid **102** as the stationary vanes **104** and rotating blades **106** accelerate and redirect the working fluid **102** to produce a continuous flow of compressed working fluid **102**. The majority of the compressed working fluid **102** flows through a compressor discharge plenum **110** to the combustion section **94**.

The combustion section **94** may include any type of combustor known in the art. For example, as shown in FIG. **9**, a combustor casing **112** may circumferentially surround some or all of the combustion section **94** to contain the compressed working fluid **102** flowing from the compressor section **92**. One or more fuel nozzles **114** may be radially arranged in an end cover **116** to supply fuel to a combustion chamber **118** downstream from the fuel nozzles **114**. Possible fuels include, for example, one or more of blast furnace gas, coke oven gas, natural gas, vaporized liquefied natural gas (LNG), hydrogen, and propane. The compressed working fluid **102** may flow from the compressor discharge passage **110** along the outside of the combustion chamber **118** before reaching the end cover **116** and reversing direction to flow through the fuel nozzles **114** to mix with the fuel. The mixture of fuel and compressed working fluid **102** flows into the combustion chamber **118** where it ignites to generate combustion gases having a high temperature and pressure. A transition duct **120** circumferentially surrounds at least a portion of the combustion chamber **118**, and the combustion gases flow through the transition duct **120** to the turbine section **96**.

The turbine section **96** may include alternating stages of rotating buckets **124** and stationary nozzles **122**. The transition duct **120** redirects and focuses the combustion gases onto the first stage of rotating buckets **124**. As the combustion gases pass over the first stage of rotating buckets **124**, the combustion gases expand, causing the rotating buckets **124** and rotor **98** to rotate. The combustion gases then flow to the next stage of stationary nozzles **122** which redirect the combustion gases to the next stage of rotating buckets **124**, and the process repeats for the following stages.

One of ordinary skill in the art will readily appreciate from the teachings herein that the embodiment shown in FIGS. **3-8** may provide one or more benefits over existing T-fairings. For example, the first and second means prevent inadvertent circumferential and/or radial movement of the upstream and/or downstream surfaces **68**, **70** of the fairing segment **60** with respect to the respective adjacent rotating blade **44** and/or rotor wheel **48** during operation. As a result, the embodiments described herein eliminate the need for the circumferential dovetail slots **22** previously included in the spacer wheels **20** to axially restrain the T-fairings **24**. In addition, the circumferential arrangement of the fairing segments **60** around the rotor wheel **50** may allow the rabbets **74** in adjacent side surfaces **72** to form a shiplap seal between adjacent fairing segments **60** to further enhance efficiency in the compressor **40**.

This written description uses examples to disclose the invention, including the best mode, and also to enable any person skilled in the art to practice the invention, including making and using any devices or systems and performing any incorporated methods. The patentable scope of the invention is defined by the claims, and may include other examples that occur to those skilled in the art. Such other examples are intended to be within the scope of the claims if they include structural elements that do not differ from the literal language of the claims, or if they include equivalent structural elements with insubstantial differences from the literal language of the claims.

What is claimed is:

1. A compressor, comprising:

a first rotor wheel assembly including a first rotor wheel and a rotating blade having a mounting portion seated within a corresponding slot defined by the first rotor wheel, wherein a downstream surface of the mounting portion defines a recess therein;

a second rotor wheel assembly axially spaced downstream from the first rotor wheel assembly, the second rotor wheel assembly including a second rotor wheel and a rotating blade having a mounting portion seated within a corresponding slot defined by the second rotor wheel, wherein an upstream surface of the mounting portion defines a projection that extends outwardly therefrom towards the first rotor wheel; and

a fairing segment that extends axially between a downstream surface of the first rotor wheel and an upstream surface of the second rotor wheel, the fairing segment having an upstream surface defining a first projection and a downstream surface defining a first recess;

wherein the first projection of the fairing segment is seated within the recess of the mounting portion of the rotating blade of the first rotor wheel assembly and the projection of the mounting portion of the rotating blade of the second rotor wheel assembly is seated within the first recess of the fairing segment, wherein the fairing segment mechanically link the mounting portion of the rotating blade of the first rotor wheel assembly to the mounting portion of the rotating blade of the second rotor wheel assembly.

2. The compressor as in claim **1**, wherein the first projection of the fairing segment and the recess of the mounting portion of the rotor blade of the first rotor wheel assembly are arcuate shaped.

3. The compressor as in claim **1**, wherein the upstream surface of the fairing segment further defines a second projection, wherein the second projection is seated within a complementary recess defined within the downstream surface of the first rotor wheel.

4. The compressor as in claim 3, wherein the second projection of the fairing segment and the recess defined within the downstream surface of the first rotor wheel are cylindrical shaped.

5. The compressor as in claim 1, wherein the first recess of the fairing segment and the projection of the mounting portion of the rotor blade coupled to the second rotor wheel assembly are complementarily shaped.

6. The compressor as in claim 1, wherein the downstream surface of the fairing segment further defines a second recess therein defined radially inward from the first recess, wherein the upstream surface of the second rotor wheel further defines a projection, wherein the projection of the upstream surface of the second rotor wheel is seated within the second recess.

7. The compressor as in claim 1, wherein the fairing segment includes circumferentially opposing side surfaces that extend between the upstream and downstream surfaces of the fairing segment, wherein each side surface is radially stepped.

8. The compressor as in claim 1, wherein an outer surface of the fairing segment defines a surface that conforms to an inner tip of a stator vane.

9. The compressor as in claim 1, wherein the upstream surface of the fairing segment is circumferentially wider than the downstream surface of the fairing segment.

10. A gas turbine, comprising:

a compressor, a combustor disposed downstream from the compressor and a turbine disposed downstream from the combustor, the compressor comprising:

a first rotor wheel assembly including a first rotor wheel and a rotating blade having a mounting portion seated within a corresponding slot defined by the first rotor wheel, wherein a downstream surface of the mounting portion defines a recess therein;

a second rotor wheel assembly axially spaced downstream from the first rotor wheel assembly, the second rotor wheel assembly including a second rotor wheel and a rotating blade having a mounting portion seated within a corresponding slot defined by the second rotor wheel, wherein an upstream surface of the mounting portion defines a projection that extends outwardly therefrom towards the first rotor wheel; and

a fairing segment that extends axially between a downstream surface of the first rotor wheel and an upstream surface of the second rotor wheel, the fairing segment having an upstream surface defining a first projection and a downstream surface defining a first recess;

wherein the first projection of the fairing segment is seated within the recess of the mounting portion of the rotating blade of the first rotor wheel assembly and the projection of the mounting portion of the rotating blade of the second rotor wheel assembly is seated within the first recess of the fairing segment, wherein the fairing segment mechanically links the mounting portion of the rotating blade of the first rotor wheel assembly to the mounting portion of the rotating blade of the second rotor wheel assembly.

11. The gas turbine as in claim 10, wherein the first projection of the fairing segment and the recess of the mounting portion of the rotor blade of the first rotor wheel assembly are arcuate shaped.

12. The gas turbine as in claim 10, wherein the upstream surface of the fairing segment further defines a second projection, wherein the second projection is seated within a complementary recess defined within the downstream surface of the rotor wheel of the first rotor wheel assembly.

13. The gas turbine as in claim 12, wherein the second projection of the fairing segment and the recess defined within the downstream surface of the first rotor wheel are cylindrical shaped.

14. The gas turbine as in claim 10, wherein the first recess of the fairing segment and the projection of the mounting portion of the rotor blade coupled to the second rotor wheel assembly are complementarily shaped.

15. The gas turbine as in claim 10, wherein the downstream surface of the fairing segment further defines a second recess therein defined radially inward from the first recess, wherein the upstream surface of the second rotor wheel further defines a projection, wherein the projection of the upstream surface of the second rotor wheel is seated within the second recess.

16. The gas turbine as in claim 10, wherein the fairing segment includes circumferentially opposing side surfaces that extend between the upstream and downstream surfaces of the fairing segment, wherein each side surface is radially stepped.

17. The gas turbine as in claim 10, wherein an outer surface of the fairing segment defines a surface that conforms to an inner tip of a stator vane.

18. The gas turbine as in claim 10, wherein the upstream surface of the fairing segment is circumferentially wider than the downstream surface of the fairing segment.

* * * * *