Feb. 16, 1965 P. HREBENAK ETAL 3,169,670

PORTABLE DISPENSING UNITS

Filed June 30, 1961

FIG. 1

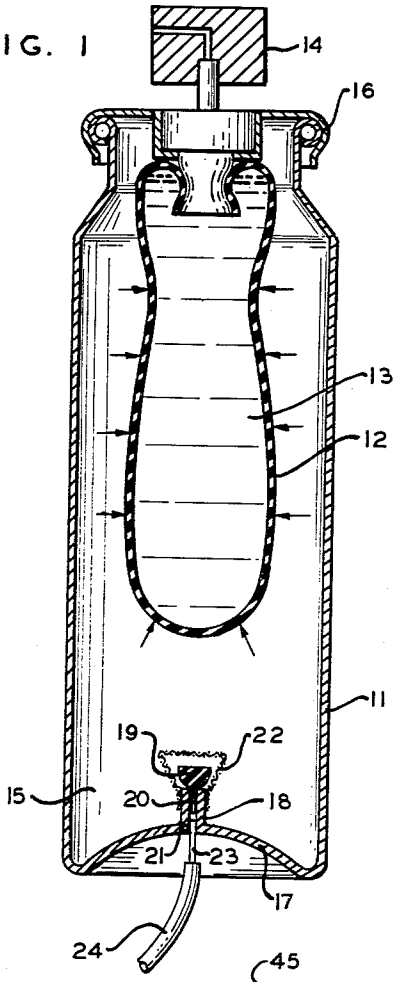

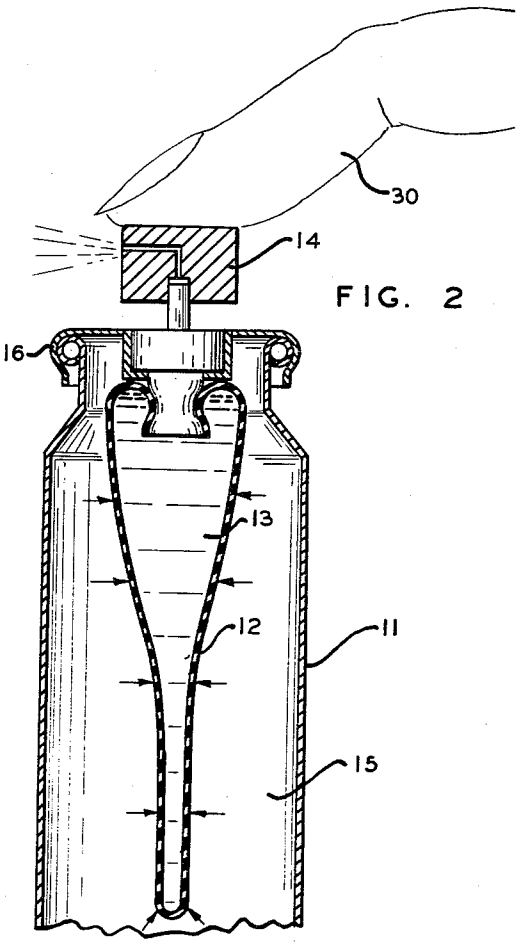

FIG. 2

FIG. 3

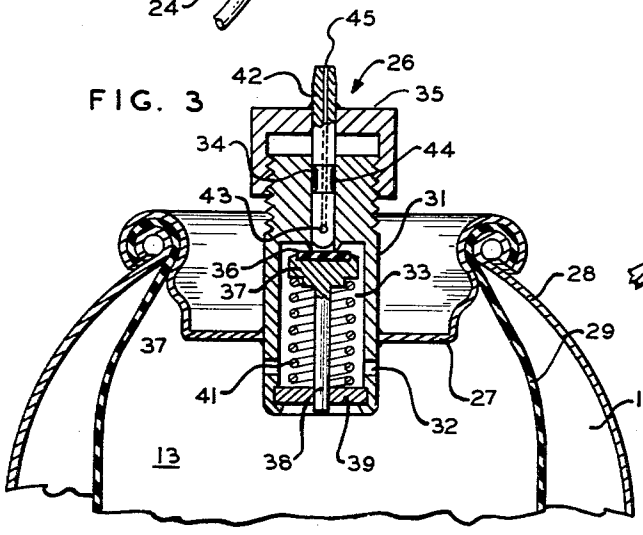

FIG. 4

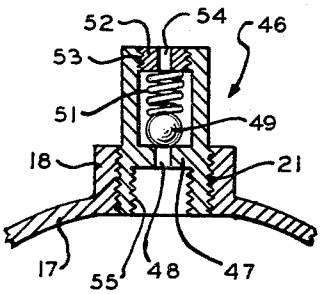

INVENTORS
PAUL HREBENAK
LEO ZUCKERMAN

BY Towson Price

ATTORNEY

United States Patent Office 3,169,670 Patented Feb. 16, 1965

3,169,670

PORTABLE DISPENSING UNITS

Paul Hrebenak, East Hanover, N.J., and Leo Zuckerman, 29 Chesapeake Ave., Lake Hiawatha, N.J.; said Hrebenak assignor to said Zuckerman

Filed June 30, 1961, Ser. No. 121,056
6 Claims. (Cl. 222—95)

This invention relates to the manufacture of portable devices such as aerosol containers for the dispensing of fluids such as sprays or streams and in particular to those in which the material to be dispensed is separated from the propellant.

Heretofore individual spray units, known as insecticide and deodorant bombs, have been highly inefficient due to the fact that the propellant was mixed with the body of the active ingredient being dispensed or sprayed, and discharged therewith during the dispensing operation. Bombs of this type required a mixture containing a larger proportion of propellant than the active ingredient. Thus the bomb container had a capacity of only a small proportion of its total for the material to be dispensed, the rest of the capacity being for the propellant, which in many cases was even more expensive than the active ingredient.

In accordance with our invention, we not only separate the propellant from the active ingredient, but make it possible to use a much cheaper propellant than heretofore. Being in a separate cavity, the minimum amount of propellant needed to push the product can be established and will never fall below this to insure complete expulsion. A suitable pressure to compensate for expansion as the product leaves container can also be established.

The container will have a simple back check or plug arrangement, wherein a simple filler prong may introduce the desired propellant with a suitable pressure. Back pressure causes the back check to close the opening as the prong is withdrawn from the hole. Such a container may be easily made on high speed equipment and filled in a simple manner.

By using compressed air, for example, as the propellant, a simple method of loading aerosol cans, as described above, may be employed. At present, cans are loaded with the product, refrigerated gas in liquid form is placed therein, valves are crimped in position, and the cans are placed in a hot water tank to expand the refrigerated propellant to vapor in order to test for leaks. Refrigeration equipment plus hot water tanks are needed.

By using a back-check in a can with an internal bag, said bag is placed in the can, the product is placed in the bag, and a dispensing valve is crimped in place at this time. The can is then simply filled through the back check with compressed air or vapor from any suitable liquid, eliminating refrigerating equipment. Finally, the can may be placed in a tub of water for testing, eliminating the need for a hot water tank.

An object of our invention is to provide a supply unit or bomb of great efficiency and requiring little propellant with a correspondingly greater capacity for the active ingredient.

Another object of our invention is to prevent the escape of the propellant with the active ingredient, thereby saving the propellant and avoiding contamination of the active ingredient thereby.

A further object of our invention is to provide a container for the discharge of material, wherein the latter is held in a flexible or resilient sac or bag therein.

These and other objects and advantages will become apparent from the following detailed description when taken with the accompanying drawings. It will be understood that the drawings are for the purposes of illustration and do not define the scope or limits of the invention, reference being had for the latter purpose to the appended claims.

In the drawings, wherein like reference characters denote like parts in the several views:

FIGURE 1 is a vertical or axial sectional view of a dispensing unit, embodying our invention, prior to operation thereof.

FIGURE 2 is a view similar to FIGURE 1, showing the squeezing effect of the compressed propellant on a sac or flexible bag in a container.

FIGURE 3 is a fragmentary axial sectional view, corresponding with an upper portion of FIGURE 1, but showing an alternative form of valved discharge nozzle.

FIGURE 4 is a fragmentary axial sectional view corresponding with a lower portion of FIGURE 1, but showing an alternative form of back-check valve which may be used.

Referring to the drawings in detail, and first considering the embodiment of our invention illustrated in FIGURES 1 and 2, there is shown a generally hollow cylindrical container **11** desirably formed of thin or sheet metal, such as steel or aluminum. Disposed inside the container **11** and dividing the space therein into two chambers is a flexible bag or sac **12**, which may be formed of rubber, plastic or the like. This bag **12** is filled with an active ingredient **13**, which may be any material to be dispensed, including sprays, medicines, salves or other substances in liquid or other form which will flow.

The assembled conventional dispensing valve **14**, normally closed by a spring (not shown), and the filled sac or bag **12** is then inserted in the pressure-resistant container **11**. The part of said container outside of said sac is for the purpose of holding a propellant, generally designated **15**. The cover plate **16** of the valve assembly may be clinched or otherwise secured to the rim of the open end of the container **11**, desirably making use of a sealing substance or means in conventional use, to obtain an airtight seal between said plate **16** and the container **11**.

In order to allow for introduction of the propellant **15** into the container **11**, the circular bottom wall **17** of said container **11** is desirably strengthened as by being of increased thickness or formed as an inwardly embossed, generally spherical permanent closure provided with an inturned cylindrical flange **18**. The inner surface of the bottom wall **17**, or the inner edge of this flange **18** serves to support a plug **19**, which is to act as a back-check and may sealably engage said bottom wall **17** or flange **18**. Said plug, for that purpose is desirably formed of rubber or plastic, with a boss or protrusion **20** adapted to fit and axially move with respect to the aperture **21** through the bottom wall **17**, defined by the flange **18**, if used. For preventing displacement of the plug **19** from its position adjacent to the flange **18**, the same may be covered by a screen **22** or the like, secured to said flange **18**, as illustrated.

The propellant, desirably in the form of compressed air, although other materials, including gas or volatile liquid such as Freon, may be applied as through a nozzle **23** on a suitable filling hose **24**. The completely assembled unit has the filled sac **12** squeezably suspended in the propellant **15**, said propellant being confined within the container **11** and disposed between the sac **12** and the walls of said container. The operation of the spray valve **14** by depressing with a finger **30** as illustrated in FIGURE 2, to overcome the closing action of the enclosed spring, permits the propellant to squeeze the pliable sac **12** containing the selected contents which are dispensed therefrom as a stream or spray, the sac **12** contracting from the shape represented in FIGURE 1 to that of FIGURE 2 under action of the propellant.

Referring now to the embodiment of our invention il-

lustrated in FIGURE 3, there is shown a modified form of dispensing or valved nozzle 26 mounted on a cap 27 secured to the casing 28. Various arrangements may be employed for the filler cap 27 and spray nozzle, as they may be secured separately to the casing or as the unit here illustrated.

As in the preceding embodiment, a flexible bag or diaphragm 29 to hold the active material 13, may be constructed of generally impervious flexible material such as metal foil, treated fabric or a rubber or synthetic film. It may have its open end portion held between the peripheral portions of the cap 27 and that of the casing 28 as illustrated, the assembly operation effecting a tight connection between the parts. For that purpose, the edge at the open end of the casing may be reinforced by turning the sheet metal thereat out as a hollow toroidal portion, between which and the similarly-formed edge portion of the cap 27, the edge portion of the bag or diaphragm 29 is tightly held. Where it is to stretch in service, it should be constructed of a suitable stretchable material such as rubber or the like. This bag 29 serves as a chamber for the active ingredient 13 and the propellant 15 is, as in the preceding embodiment, disposed outside of the bag 29 but inside of the container 28. The bottom wall of said container, which is not here shown, is provided with a suitable back-check propellant-admitting valve as in the preceding embodiment.

The nozzle 26, in the present embodiment, for discharging the active ingredient from the bag 29, here comprises a cylindrical valve body 31 extending through the cap 27 centrally of the latter and welded or otherwise connected thereto. The inner end of the valve body 31 is perforated as at 32, just inside the cap 27, and is hollow to provide a valve chamber 33. The outer end of the valve body 31 is tubular with a relatively small axial opening 34 therethrough and is threaded externally to receive the threaded cap 35.

The valve in the chamber 33 here comprises a seal, gasket or washer 36 disposed over or around the inner end of said axial opening 34 to seal the same against entrance of the active ingredient. A plate 37 bears against the inner side of the washer 36 to effect the seal. A stem 38 secured to plate 37 extends downwardly through a hole in a plate 39 at the opposite end of chamber 33 to guide the plate 37 and retain it so that it will always resume a position substantially parallel to the shoulder against which washer 36 seats around the inner end of opening 34.

A coil compression spring 41 is disposed between the plates 37 and 39 to bias the same apart and thereby effect a normal seating of the valve to close opening 34 and prevent leakage of the active ingredient. The plate 39 may be held in the chamber 33 by crimping inwardly of the inner end of the valve body after assembly of the valve and the parts described in the chamber 33.

The valve is opened by means of a tubular plunger 42 secured axially to the cap 35 and which extends through the opening 34 to push the washer 36 and plate 37 downwardly against the spring 41 when the cap 35 is threaded downwardly upon the outer end of the valve body.

The tubular plunger 42 has one or more lateral holes 43 for admitting the active ingredient into the same from the bag 29 upon unseating of the valve as described. A suitable packing 44 in the form of a ring encircles the plunger 42 to seal it against the walls of opening 34 and thereby prevent any substantial escape of the active ingredient into the cap 35 and the threads between it and the valve body. The outer end of the tubular plunger 42 extends through the cap 35 and constitutes the discharge orifice 45 for the spray nozzle.

To operate, the cap 35 is turned downwardly upon the valve body causing the plunger 42 to unseat the valve plate 37 and admit the active ingredient through the perforations 32, valve chamber 33, openings 43, and through the hollow plunger 42 to orifice 45, where the active ingredient is discharged in a predetermined spray or stream, depending on the ingredient and its use. Outward or upward threading of the cap 35 permits the valve to seat around opening 34 and stops the discharge of the active ingredient.

The discharge of the active ingredient is effected by the pressure of the propellant. Examples of suitable materials for the propellant are as in the first embodiment. Thus, they may include Freon, methyl bromide, propane and butane gases, but compressed air is considered to be the cheapest and most suitable. It may be applied to the container through the bottom valve, not here shown, but as in the first embodiment.

Referring now to the embodiment of our invention illustrated in FIGURE 4, there is shown a modified form of back-check valve 46, which is threaded into the aperture 21 in the bottom wall 17 of the container 11, or the flange 18 thereon. Said valve is provided with an intermediate wall 47 having an aperture or opening 48 therein normally closed by a ball 49, axially movable with respect to said aperture. Said ball is pressed against said wall by a spring 51 abutting against a plug 52 in the threaded opening 53 in one end thereof, so as to normally close said aperture. An opening 54 is provided in this plug. Some means is threaded into the internal portion 55 of the valve for connection with a source of compressed air or other fluid to be forced into the container until a certain desired pressure exists. This valve 46 is one which may be substituted for the valve or plug 19 of FIGURES 1 and 2 and used for the same purpose as described in connection wtih the first embodiment there illustrated.

From the foregoing description of the apparatus, it is thought that the method of assembling and filling the container will be clear. Briefly, the bag or sac of the unit may be filled with the active ingredient and, together with a cap or closure member, applied to the open end of the container and cap sealed thereto. After this, the propellant is introduced into the container through the back check valve, which after introduction prevents the propellant from escaping. Although compressed air is preferred because of its cheapness, yet other suitable fluids may be employed as heretofore mentioned. However, it is desirable that the fluid employed by a gas or vapor at room temperature so that heat is not needed in testing for leaks.

Having now described our invention in detail in accordance with the patent statutes, those skilled in this art will have no difficulty in making changes and modifications in the individual parts or their relative assembly in order to meet specific requirements or conditions. Such changes and modifications may be made without departing from the scope and spirit of the invention, as set forth in the following claims.

We claim:

1. A portable self-contained pressurized unit for dispensing fluids comprising an air-tight container open at one end and with its other end permanently closed, a movable member within said container and dividing the space therein into two chambers, one of said chambers containing an active ingredient to be discharged and the other of said chambers containing a propellant adapted to provide a predetermined discharge pressure for said active ingredient and to move said member into the space initially occupied by said active ingredient as it is discharged, said propellant chamber being defined by said container, a valve-controlled discharge nozzle for said active ingredient chamber, a back-check valve in said closed portion for admitting the propellant to, and holding it in, the propellant chamber of, said container, said valve normally closing, and axially movable with respect to, an aperture in said portion, and means for holding said valve closed.

2. A portable unit as recited in claim 1, wherein the edge of the open end of the container is reinforced by forming thereat a hollow toroidal portion, the movable

member is a flexible rubber-like bag containing the active ingredient, and closure means with an outer edge portion bent around said toroidal portion for sealing it to said container.

3. A portable unit as recited in claim 1, wherein the propellant is compressed air.

4. A portable unit as recited in claim 2, wherein the container is formed of metal, and the edge portion of the bag is tightly held between said toroidal portion and the bent edge portion of said closure means.

5. A portable unit as recited in claim 4, wherein the container has a bottom thicker than the remainder and the back-check valve for admitting and holding the propellant is secured in said bottom.

6. A portable self-contained pressurized unit for dispensing fluids comprising an air-tight sheet metal container open at one end with its other end permanently closed by a circular portion inwardly embossed for strength, the edge at the open end of the container being reinforced by turning the sheet metal thereat out as a hollow toroidal portion, a rubber-like movable member within said container as a bag opening toward said container open end and dividing the space therein into two chambers, one of said chambers being in said bag and containing an active ingredient to be discharged and the other containing a propellant adapted to provide a predetermined discharge pressure for said active ingredient and to move said member into the space initially occupied by said active ingredient as it is discharged, said propellant chamber being entirely within said container, a cap for the container, formed centrally of the edge thereof at the open end of said container, and between which end said hollow toroidal container edge portion, the edge portion of the bag is tightly held, a valve-controlled discharge nozzle for said bag, said nozzle comprising a cylindrical valve body mounted on and extending through said cap centrally of the latter, the inner

end of said valve body being apertured inside the cap and hollow to provide a valve chamber, the outer end portion of said valve body having a relatively small axial opening and threaded externally, a cap threaded to the outer end portion of said valve body, a tubular plunger secured to and extending from said cap to form a discharge nozzle, and with an inner portion guidingly received in said axial opening for operatively engaging said valve, said valve comprising a washer disposed over the inner end of said axial opening to seal the same against entrance of the active ingredient, a plate bearing against the inner side of the washer, a stem secured to the plate, extending inwardly and guided by the cap, resilient means around said stem to hold the valve closed until forcibly opened by inward movement of said plunger upon turning said cap, and means for admitting the propellant to and holding it in the propellant chamber to press on said bag.

References Cited by the Examiner

UNITED STATES PATENTS

1,086,532	2/14	Huss	222—95
2,127,548	8/38	Boyle et al.	73—52
2,689,768	9/54	Falligant	222—399
2,693,418	11/54	Smith	141—3 X
2,816,691	12/57	Ward	222—183
2,857,935	10/58	Spiess et al.	141—3
2,929,432	3/60	Kominic et al.	141—38
2,937,791	5/60	Micallef	222—95
3,013,591	12/61	Stanley et al.	141—3
3,021,877	2/62	Wellsch	141—38

LOUIS J. DEMBO, *Primary Examiner.*

LEVERNE D. GEIGER, EUGENE F. BLANCHARD, *Examiners.*