United States Patent

[11] 3,633,307

[72] Inventors **Charles H. Steuber; Robert L. Cremer, both of Neosho, Mongolia; Jerry D. Wood, Plainfield, N.J.**

[21] Appl. No. **17,579**
[22] Filed **Mar. 9, 1970**
[45] Patented **Jan. 11, 1972**

[73] Assignee **Buddy L Corporation New York, N.Y.**

[54] **TOY VEHICLE**
6 Claims, 7 Drawing Figs.

[52] **U.S. Cl.** **46/201**
[51] **Int. Cl.** **A63h 11/10**
[50] **Field of Search** 46/201, 202, 221, 223

[56] **References Cited**

UNITED STATES PATENTS

1,979,242	11/1934	Allen	46/201 X
2,027,049	1/1936	Levy	46/201
2,216,497	10/1940	McHenry	46/201
2,510,310	6/1950	Francis	46/201
2,838,875	6/1958	Hammond	46/201
3,005,285	10/1961	Girz	46/201
3,063,194	11/1962	Berguerand	46/201
3,205,616	9/1965	Nisperly	216/201

Primary Examiner—Louis G. Mancene
Assistant Examiner—D. L. Weinhold
Attorney—Ralph W. Kalish

ABSTRACT: A toy vehicle incorporating a frame having depending supports, there being forward and rearward transversely aligned bearing slots in said supports for receiving front and rear axles, which are freely rotatable therein. Each of said slots is inclined to the vertical for defining cams for allowing movement of said axles relative to said frame along a path having both a horizontal and a vertical component. Detent members provided on said frame for engaging each axle to inhibit movement of the same toward the opposite end of the frame when disposed transversely of the frame and serving as fulcrums for swinging of said axles to allow turning upon the application of force on the side of said frame to which the turn is to be made.

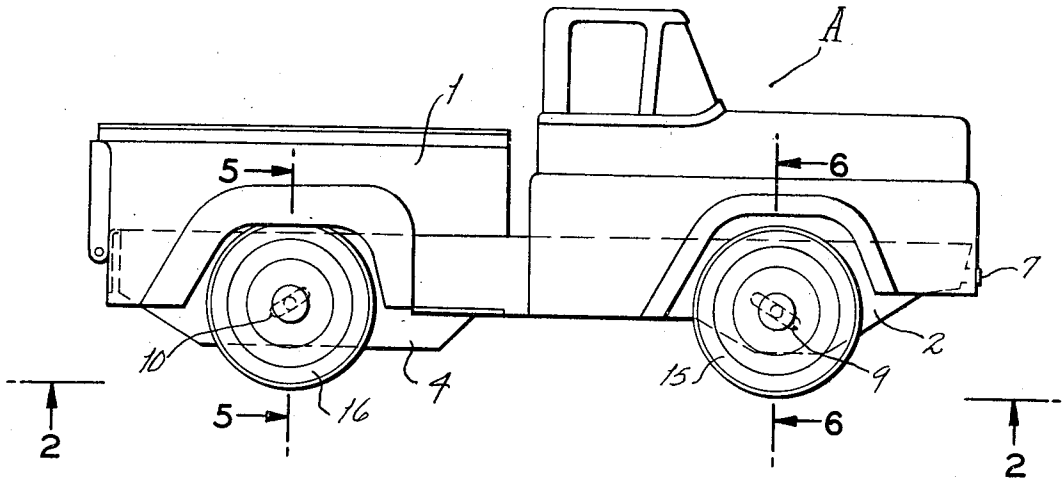

PATENTED JAN 11 1972

3,633,307

SHEET 1 OF 2

FIG. 1

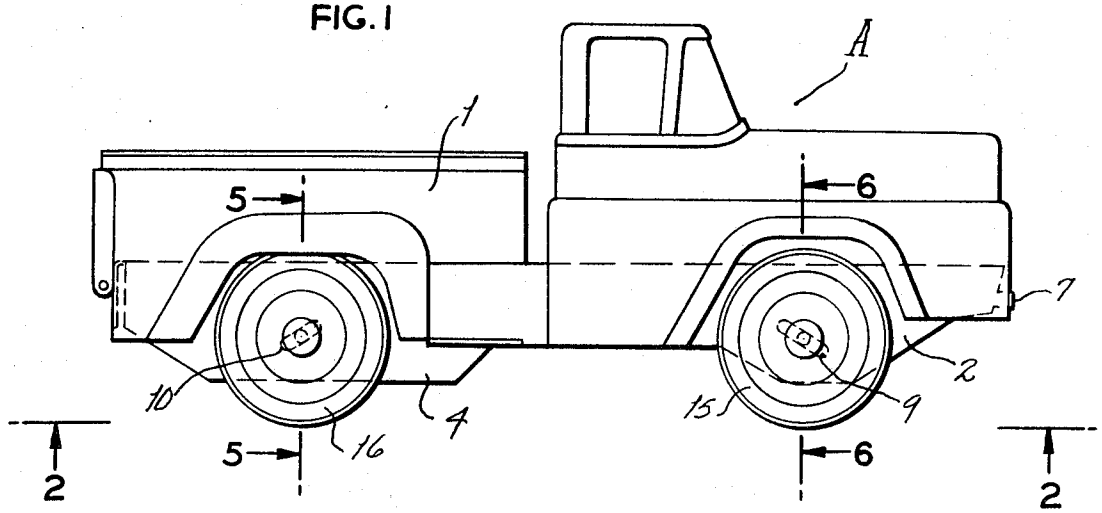

FIG. 2

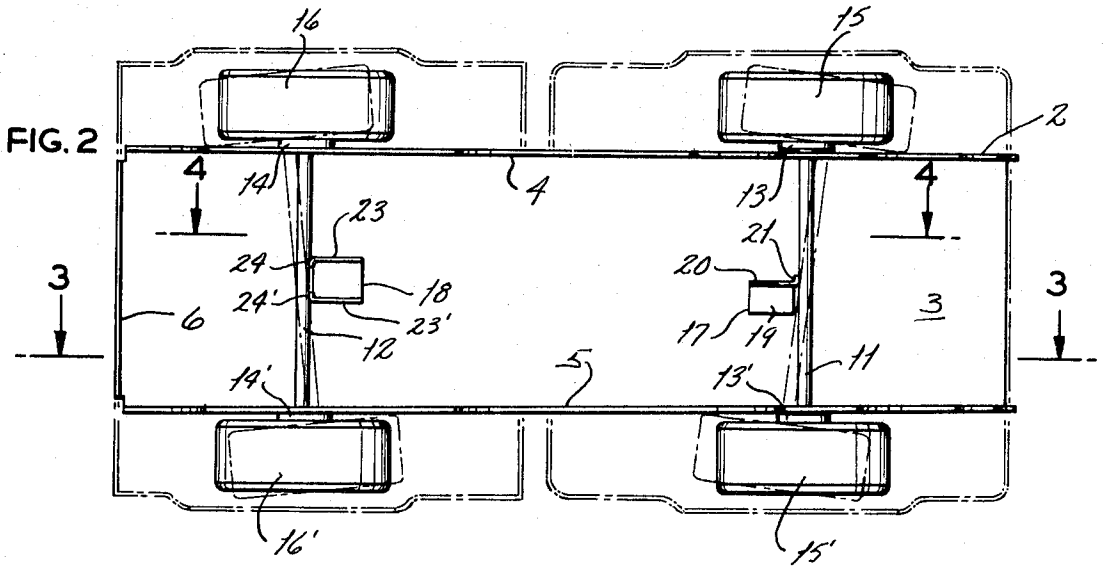

FIG. 3

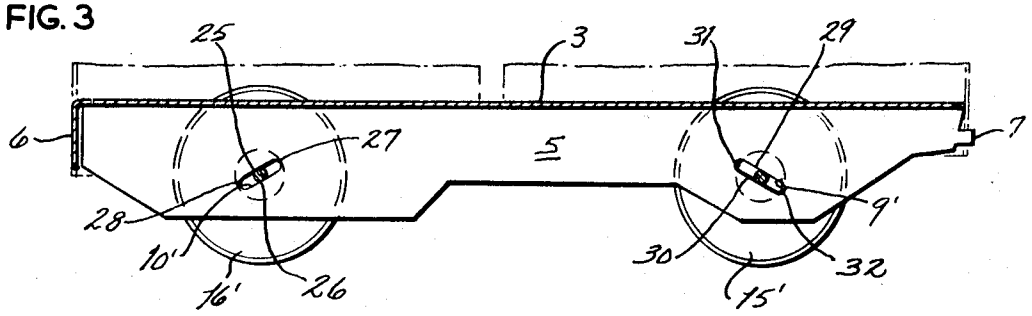

INVENTORS
CHARLES H. STEUBER
ROBERT L. CREMER
JERRY D. WOOD
BY Ralph W. Kalish
ATTORNEY

FIG. 4

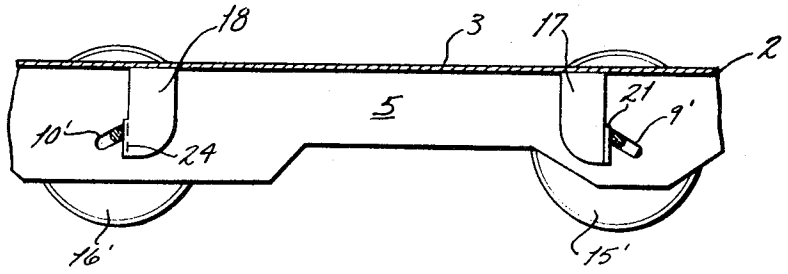

FIG. 5

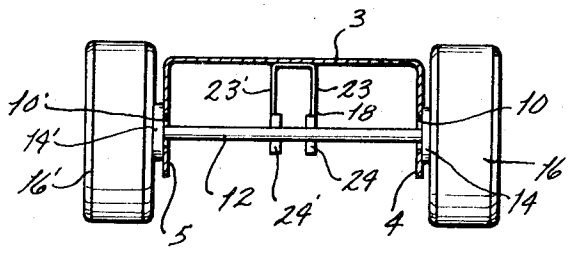

FIG. 6

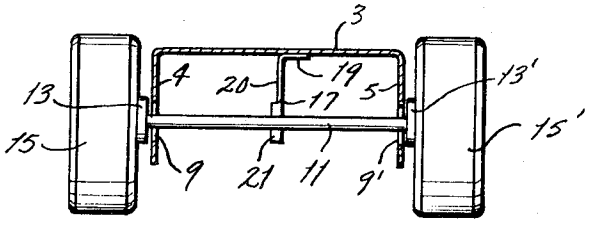

FIG. 7

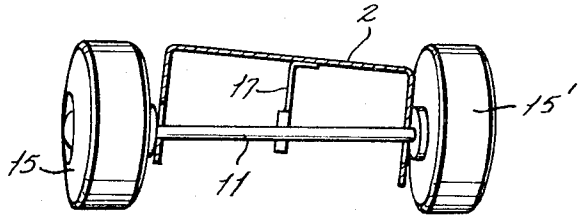

INVENTORS
CHARLES H. STEUBER
ROBERT L. CREMER
JERRY D. WOOD
BY Ralph W. Kalish
ATTORNEY

TOY VEHICLE

BACKGROUND AND SUMMARY OF THE INVENTION

This invention relates in general to toy vehicles and, more particularly, to a vehicle having a pressure-controlled steering system.

It is an object of the present invention to provide a toy vehicle adapted for dirigibility by the discriminate application of force upon the vehicle frame so that steering may be easily effected by the user without resort to manipulation of the relatively complex control means which have been heretofore incorporated in vehicles of this type.

It is another object of the present invention to provide a toy vehicle incorporating axle bearings adapted for camming relationship with the associated axles to allow swinging of the same with relation to the main frame for turning purposes.

It is another object of the present invention to provide a vehicle of the type stated incorporating axle-engaging members for maintaining the prescribed relationship between the main frame of the axles both during rectilinear and curvilinear travel, as well as to conduce to return of the vehicle to rectilinear movement after completion of a turning movement.

It is a still further object of the present invention to provide a vehicle of the type stated which is economical in manufacture, being comprised of a marked simplicity of durable parts and hence being resistant to breakdown despite the customarily heavy usage accorded such vehicles by children.

It is another object of the present invention to provide a vehicle of the type stated which, through its novel steerability provides a source of fascination for young users, as well as endowing the vehicle with substantial play value.

BRIEF DESCRIPTION OF THE DRAWINGS

FIG. 1 is a side elevational view of a toy vehicle incorporating a steering system constructed in accordance with and embodying the present invention.

FIG. 2 is a bottom plan view taken along the line 2—2 of FIG. 1 with the axles shown in phantom lines in one turning position.

FIG. 3 is a vertical longitudinal section taken on line 3—3 of FIG. 2.

FIG. 4 is a vertical longitudinal section taken on the line 4—4 of FIG. 2.

FIG. 5 is a vertical transverse section taken on the line 5—5 of FIG. 1.

FIG. 6 is a vertical transverse section taken on the line 6—6 of FIG. 1.

FIG. 7 is a vertical section taken substantially on the line 6—6 of FIG. 1 illustrating the wheels in a turned position relative to the frame.

DESCRIPTION OF THE PREFERRED EMBODIMENT

Referring now by reference characters to the drawings which illustrate the preferred embodiment of the present invention. A generally designates a toy vehicle having a body 1, which may be of any selected design or character, but which for purposes of illustration is shown as a pickup truck. Body 1 is suitably mounted upon a main frame 2 of unitary construction comprising a platform or base 3 having depending side flanges or supports 4,5 which, for strengthening, may be coextensive with platform 3, and a rear flange or skirt 6. As indicated, body 1 may be secured upon main frame 2 by suitable means such as by fastener members (not shown) projecting through aligned openings (not shown) in said body 1 and portions of said frame 2 or as by cooperating tabs and apertures, as suggested by tabs 7 at the forward end of supports 4,5. It is, of course apparent, that, if desired, the body and frame could be unitarily made.

Formed in supports 4,5 are transversely aligned forward and rearward bearing slots 9,9′ and 10,10′, respectively, which loosely receive front and rear axles 11,12, respectively, so that the latter may turn freely therein and may also move relatively reciprocally axially thereof in camming relationship thereto, as will be shown more fully hereinbelow. The laterally projecting, opposite end portions of axles 11,12 are journaled within bearings 13,13′ and 14,14′, respectively, of front wheels 15,15′ and rear wheels 16,16′, respectively.

Fixed to the underface of platform 3 and depending downwardly therefrom are front and rear detents 17,18, respectively, for engaging axles 11,12, respectively. Front detent 17 may be of angle configuration having a leg 19 rigid with the underface of platform 3 and a perpendicularly depending leg 20, the plane of which is preferably aligned with the centerline of frame 2. The forward edge of said leg 20 is provided with a laterally turned flange 21, the plane of which is substantially in alignment with the transverse axis of said forward slots 9,9′. The length of leg 20 is such that the flange 21 is presented so that its forward face will abut axle 11 for inhibiting movement of the same relatively rearwardly of frame 2 when in axial normal relationship to the longitudinal axis of said frame 2.

Rear detent 18, which may incorporate a mounting web 22 for securement to the underface of platform 3, is provided with a pair of depending, parallel legs 23,23′ located on opposite sides of, and preferably equidistant from, the longitudinal centerline of frame 2. Each of said legs 23, 23′ is provided on their rearwardly directed edges with laterally turned flanges 24,24′, the planes of which are in alignment with the transverse axis of rearward slots 10,10′; said flanges 24,24′ being presented for abutting rear axle 12 on their rearwardly directed faces so as to inhibit movement of said axle 12 forwardly of frame 2 when its axis is transverse to said frame. The disposition of flanges 24,24′ provide an area of contact with axle 12 greater than that between front axle 11 and the detent flange 21.

As shown here and above, detents 17,18 serve to resist the movement of the related axle toward the opposite end of frame 2. Said detents 17,18 are presented so that their flanges are aligned with the transverse axis passing through the related slots. This disposition has been found desirable since it will permit relative movement of the related axles an equal distance toward the opposite end of the related slots during turning, to be described below. However, the said detents 17,18 may be, if desired, altered with relationship to the associated slots for controlling such axle movement.

Rearward slots 10,10′, which in addition to providing a bearing for axle 12, serve as cams and are inclined to the vertical for extension downwardly and rearwardly at an angle of approximately 45°. Each slot 10,10′ is provided with opposed upper and lower parallel edges 25,26, respectively, which define cam-operating surfaces for engaging the received portion of axle 12, said latter thus relating thereto as a cam follower. Said edges 25,26 are continuous with interconnecting, rounded forward-upper and rearward-lower terminal edges 27,28, respectively; said former being thus located forwardly of detent flanges 24,24′ (see FIG. 4).

Front slots 9,9′ are of like character as rear slots 10,10′ in that the same concurrently provide bearings for axle 11 and relate thereto in a camming manner. Said slots 9,9′ also are inclined with respect to the vertical, extending downwardly and forwardly at substantially an angle of 45°, with each being so related to the slot 10,10′ on the same side of frame 2 that the projection of the longitudinal axes of such adjacent slots will intersect at a point upwardly of frame 2. Each slot 9,9′ thus comprises upper and lower parallel edges 29,30, which at their ends are interconnected by rounded rearward-upper and forward-lower terminal edges 31,32, respectively; said former being located rearwardly of the proximate detent flange 21 (see FIG. 4). It will be observed that by reason of the reverse inclination, as it were, of the slots at the front and rearward ends of said frame 2 and of the disposition of detents 17,18, relative to the related axles 11,12, respectively, vehicle A may be considered interchangeable end for end. However, as will be shown below, the dual character of detent 18 renders same operationally critical at the rearward end of vehicle A.

In normal condition with axles 11,12 in mutual parallel relationship (as shown in full lines in FIG. 2) frame 2, through gravity, will be biased downwardly urging axles 11,12 relatively upwardly within the respective bearing slots toward the upper ends 31,27 thereof. However, such force is resisted by detents 17,18 which prevent relative movement of axles 11,12 toward the upper ends of the associated slots, and thus restrain said axles in mutually parallel relationship, but wherein said axles abut against the upper cam-operating surfaces defined by slot edges 25,29.

In usage, with axles 11,12 extending transversely of vehicle A, the latter when impelled as by a suitable pushing or pulling force will move in a rectilinear path. However, when it is desired to cause vehicle A to effect a turn as to the right or left of the rectilinear path, vehicle A may be steered by the application of a downwardly directed force, as by the hand of the user, upon the side of vehicle A upon which the turn is to be effected. Such force, being eccentrically applied, will cause the pressure-receiving portion of frame 2 to be rocked downwardly resulting in the adjacent end portion of axle 11 being moved relatively upwardly into the rearward-upper end 31 of the related slot 9,9 , as the case may be, while the opposite side of frame 2 will be commensurately raised with the related end portion of axle 11 being brought into disposition against the forward-lower end 32 (see FIGS. 2 and 7) of the proximate slot 9 or 9'. By the application of such eccentric force upon frame 2 axle 11 is swung or pivoted within its horizontal plane out of perpendicular relationship to the longitudinal axis of frame 2, with detent flange 21 acting as a fulcrum, since the relative movement of axle 11 within slots 9,9' is dictated by the camming action. Thus, in swung condition axle 11 will extend between the opposite ends of the associated slots 9,9'. The swinging of axle 11 consequent to the downwardly applied, eccentric force above described, will automatically cause a relative swing of rear axle 12 with respect to frame 2, but in a manner opposite to that of axle 11 by reason of the fact that slots 10,10' are upwardly inclined toward their forward ends. Thus, slots 10,10' act cammingly upon axle 12 so as to direct the end thereof on the turning side to be moved relatively forwardly and on the opposite side relatively rearwardly, all may best be seen in phantom lines in FIG. 2. Axle 12 is fulcrumed upon detent flanges 24,24'. If the axes of axles 11,12 while in swung condition were extended beyond the turning side of frame 2, the same would intersect at a point spacedly laterally of said frame.

It has been found that under the particular applied force, vehicle A will continue its turn for a predetermined travel increment and will be inherently restorable to rectilinear travel as rear axle 12 will tend through friction to return to transverse condition and into abutment against detent flanges 24,24' which straightening condition, as it were, will effect a reaction on front axle 11 causing same to returningly swing into transverse disposition with respect to frame 2. The fact that detent flanges 24,24' engage axle 12 at points laterally of the midpoint thereof conduces to the restoration of axle 12 to transverse condition, and hence of vehicle A to rectilinear movement.

As may be more apparent from FIG. 3, forward slots 9,9' are of relatively greater length than rearward slots 10,10' so that the arc of swing of axle 11 is greater than that of axle 12 to allow a greater turning movement through the front wheels.

Thus, vehicle A is composed of a minimum number of parts which are extremely durable, and hence resistant to breakdown thereby conducing to longevity despite the customary hard usage to which children subject mobile toys. The dirigibility of vehicle A is easily controlled by the application of pressure upon the particular side to which the turn is desired so that there is obviated resort to relatively delicate and complex steering devices which have been generally incorporated in vehicles of this type.

Having thus described our invention, what we claim and desire to obtain by Letters Patent is:

1. A toy vehicle comprising a frame having depending supports, front and rear transversely aligned bearing slots formed in said supports, a front axle received within said front bearing slots and projecting laterally outwardly therebeyond, a rear axle received within said rear bearing slots and projecting laterally therebeyond, wheels mounted upon the projecting portion of said axles, said forward bearing slots being inclined to the vertical and each having a forward-lower and a rearward-upper end whereby said front axle will be relatively urged toward the rearward-upper end of the related slots under the frame load, first detent means located substantially intermediate said support flanges for preventing concurrent movement of the related portions of the front axle toward the upper-rearward end of the associated front bearing slots, said rear bearing slots being inclined to the vertical and each having a rearward-lower and a forward-upper end, and second detent means located between said support flanges for preventing concurrent movement of the related portions of said rearward axle toward the forward-upper end of the associated rear bearing slots.

2. A toy vehicle as defined in claim 1 and further characterized by the front and rear bearing slots on each support being so related to each other that a projection of their longitudinal axes will intersect at a point in space upwardly of said frame.

3. A toy vehicle as defined in claim 1 and further characterized by said front bearing slots and said rear bearing slots having their major axis presented at an angle of 45°.

4. A toy vehicle as defined in claim 1 and further characterized by said second detent means comprising a pair of spaced-apart detents depending from said frame, each of said detents having axle-engaging surfaces spaced apart transversely of said vehicle.

5. A toy vehicle as defined in claim 1 and further characterized by each of said first and second detent means having an axle-engaging face, the plane of each face being aligned with the transverse axis of the respective front and rear bearing slots, each of said front and rear bearing slots having an edge engaging the related axle whereby upon the application of an eccentric downward force on said frame, the front and rear bearing slots on the side of the frame proximate the applied force will be moved relatively of the related axle to cause the front axle to be moved toward the rearward-upper end of the front bearing slot and the rear axle to be moved to the forward-upper end of the rear bearing slot with simultaneous pivoting of the axles about the associated detents causing the front and rear wheels on the side proximate the applied force to be moved toward each other, while the wheels on the opposite side of said frame are being moved away from each other.

6. A toy vehicle as defined in claim 5 and further characterized by said front bearing slots having a length greater than the length of said rear bearing slots for allowing a relatively greater turning movement through the front wheels.

* * * * *