Sept. 26, 1933. H. E. MUCHNIC 1,928,360

BRAKE BEAM

Filed May 26, 1930 2 Sheets-Sheet 1

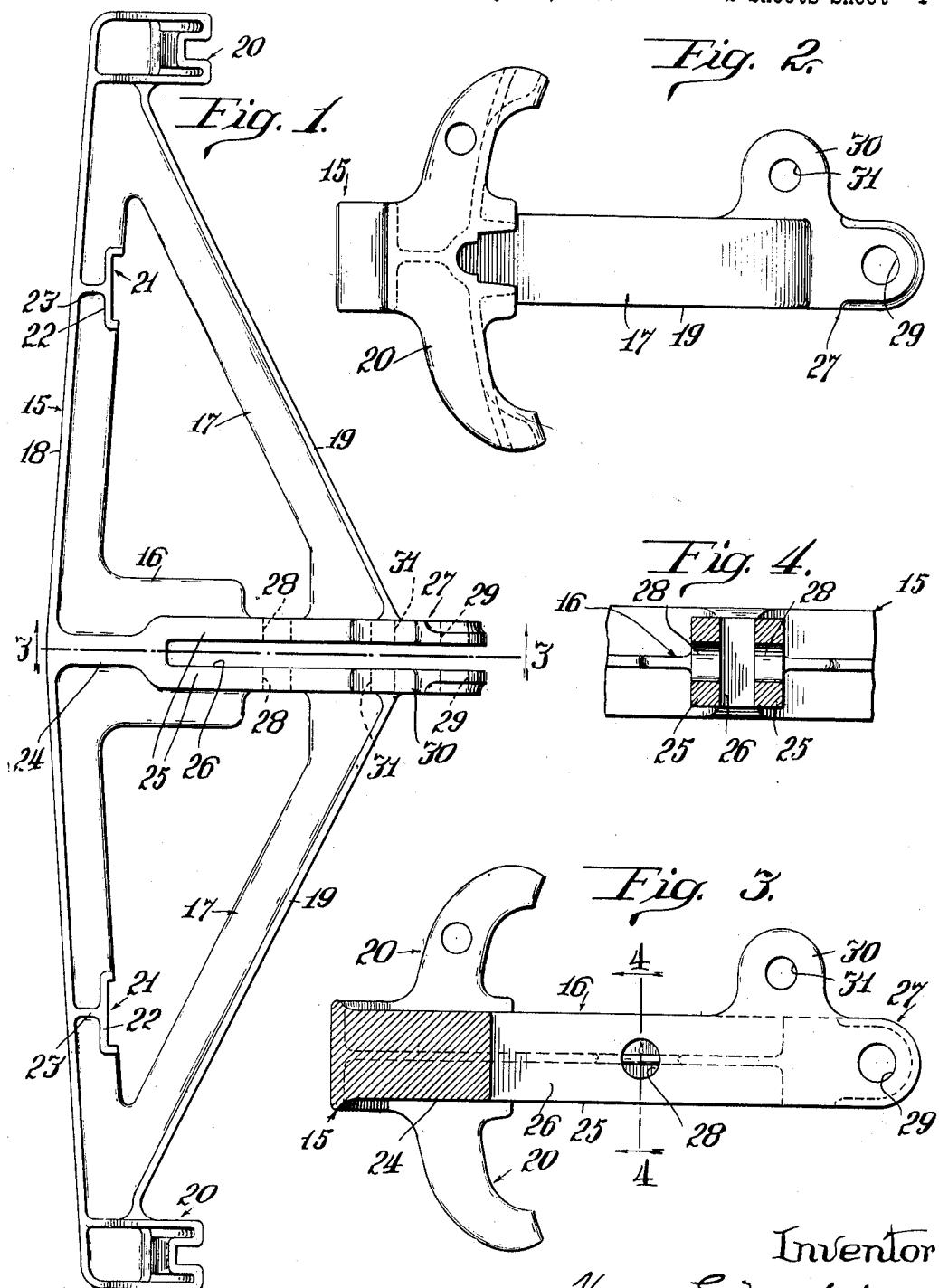

Witnesses
Milton Lenoir
F. H. Florell

Inventor
Henry E. Muchnic,
By George Heidman
Attorney

Sept. 26, 1933. H. E. MUCHNIC 1,928,360

BRAKE BEAM

Filed May 26, 1930 2 Sheets-Sheet 2

Fig. 5.

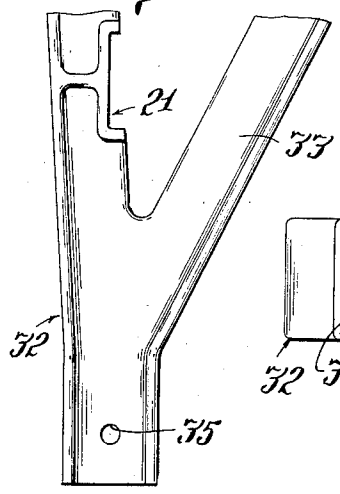

Fig. 7.

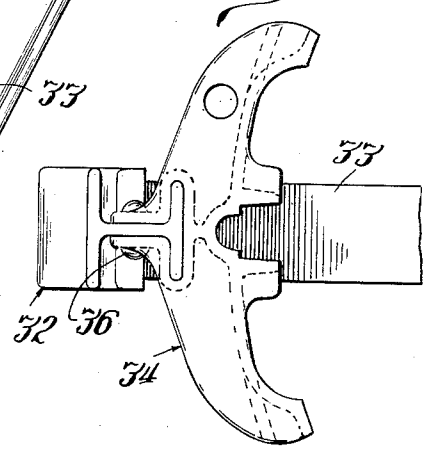

Fig. 6.

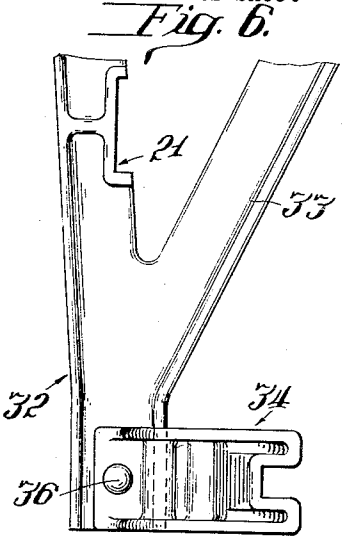

Fig. 8.

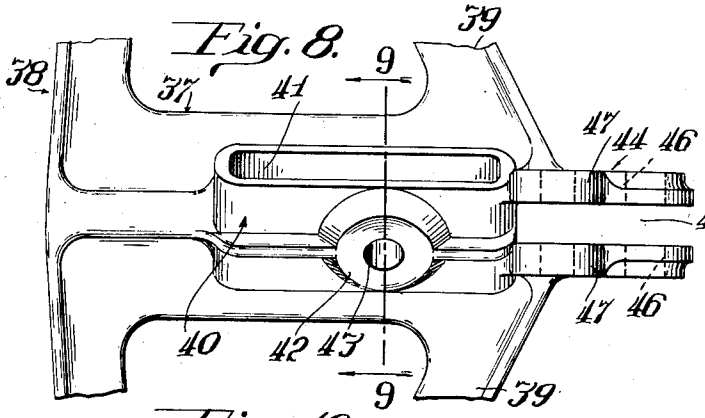

Fig. 9.

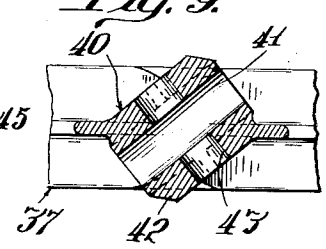

Fig. 10.

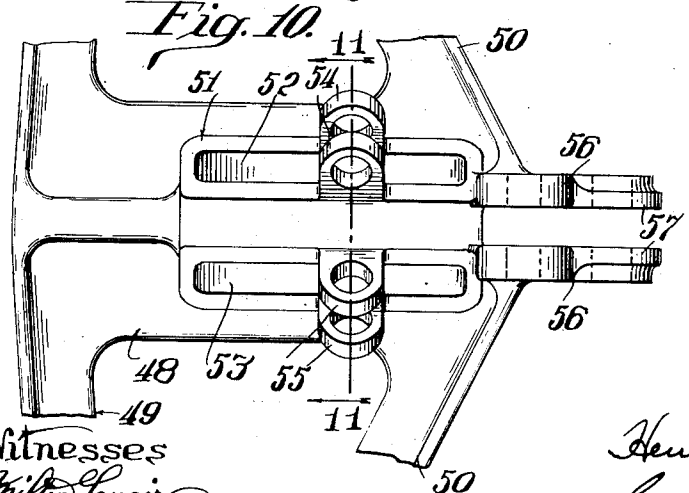

Fig. 11.

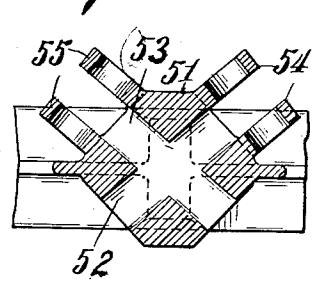

Witnesses
Milton Lenoir
F. W. Florell

Inventor
Henry E. Muchnic,
By George Heidman
Attorney

Patented Sept. 26, 1933 1,928,360

UNITED STATES PATENT OFFICE

1,928,360

BRAKE BEAM

Henry E. Muchnic, Atchison, Kans., assignor to The Locomotive Finished Material Company, Atchison, Kans., a corporation of Kansas

Application May 26, 1930. Serial No. 455,482

3 Claims. (Cl. 188—219)

My invention relates to brake beams for railroad cars and has for its object the provision of a one piece brake-beam wherein the compression member, the strut member, the tension member and the brake-shoe heads are all integrally formed, thereby providing a brake-beam wherein the difficulties heretofore encountered through the loosening of the connections between the various members or elements of the brake-beam are entirely obviated and a stronger and firmer construction provided.

Another object of my invention is to provide a brake-beam which is not only adapted to heavier cars and loads as at present employed, but which at the same time is provided with means for receiving and mounting the usual brake-lever, at the required angularity or degree of angle necessary, whether for a right or left application.

Another object of the invention is also to provide a construction which will permit of the brake-shoe heads to be either integrally formed therewith or which permits the standard brake-shoe heads to be rigidly and readily secured thereto.

The above enumerated objects and the advantages inherent in my invention will all be readily comprehended from the following detailed description of the accompanying drawings, wherein:

Figure 1 illustrates my improved brake-beam in elevation,

Figure 2 is an end view thereof.

Figure 3 is a vertical sectional view taken substantially on the line 3—3 of Figure 1, as viewed by the arrows.

Figure 4 is a detail sectional view taken substantially on the line 4—4 of Figure 3, as viewed by the arrows.

Figure 5 is a plan view of one end of a modified form of the brake-beam.

Figure 6 is a similar view of the portion of brake-beam shown in Figure 5, provided with a separate brake-shoe head secured thereto.

Figure 7 is an end view of the construction shown in Figure 6.

Figure 8 is a plan view of the intermediate or strut portion of the brake beam, illustrating a modified form.

Figure 9 is a detail sectional view taken substantially on the line 9—9 of Figure 8, as viewed by the arrows.

Figure 10 is a plan view of the intermediate portion of the brake-beam illustrating a further modification.

Figure 11 is a detail sectional view taken substantially on the line 11—11 of Figure 10, as viewed by the arrows.

Brake-beams of different construction have been used in an endeavor to meet the heavier and ever increasing duties of railroad cars with the result that brake-beams of certain known construction heretofore employed were found inadequate because of a tendency to flex and stretch. Because of lack of clearance between the wheels and the bolster or the wheels and the spring planks of the truck, recourse was had to a truss type of construction composed of separate members bolted or otherwise secured totgether. In operation, however, the fastenings or elements of such composite beams have a tendency to work loose and therefore involve a considerable maintenance expense in keeping such brake-beams in proper working condition.

My invention is designed to provide a brake-beam, having the requisite strength for present day duty, wherein the compression member 15, extending continuously from end to end, is formed integral at an intermediate point with the central strut member 16; while the ends of the compression member and the lower end of the strut member are formed integral with the ends of the tension members 17, 17, see Figure 1.

The outer longitudinal edge of the compression member 15 is preferably provided with a flange 18 disposed to opposite sides of the main portion of the compression member 15; while the outer longitudinal edges of the tension members 17, 17 are likewise preferably provided with flanges 19, disposed transversely to opposite sides of the main portion of the tension members.

These flanges along the outer longitudinal surfaces of the members assist in providing a very rigid structure.

The ends of the compression member 15, of the type of brake-beam shown in Figure 1, are shown provided with brake-shoe heads 20, 20, of proper construction adapted to receive the usual brake-shoes, not shown.

In the construction shown in Figure 1, the reenforcing flanges 18 and 19 are continued into the marginal edges of the brake-shoe heads 20, 20, as shown in Figure 1.

The specific type of brake-beam shown in Figure 1 has the compression member 15, at points intermediate of the ends and the strut member 16, provided with the reduced or notched portions 21, 21 for the purpose of receiving suitable suspension means whereby the brake-beam may be oscillatably secured to the truck-frame, or for the attachment of a relief spring.

The compression member, at these notched points, is provided with reenforcing flanges 22, formed integral with the transverse ribs 23, 23, thereby strengthening the beams at these points.

The strut member 16 is provided on opposite sides with the integral, transversely extending wall portions 24, which, throughout the major portion thereof, are of increased thickness, as shown at 25, and this enlarged portion provided with a slot 26 which extends through to what may be termed the inner side of the brake-beam. That is to say, the strut member 16 is shown extending beyond the juncture of the strut member and the tension members 17, 17, as shown at 27, and the slot 26 extends entirely through to the end of this extension, thus providing an open-ended slot which permits easy insertion of the usual lever of the foundation brake rigging (not shown).

The enlarged walls 25 of the strut member 16 are provided with the transversely disposed, registering holes 28, adapted to receive a suitable pivot pin for the lever of the foundation brake rigging; while the extensions 27 are shown provided with the registering holes 29 which may be employed for receiving suitable alternate suspension means.

The strut member 16, adjacent to the extension 27, is provided on one side with a pair of spaced lobes 30, 30, and these lobes in turn provided with registering holes 31 for the purpose of receiving suitable suspension means whereby the inner end or side of the brake-beam may be suspended in place.

The construction of brake-beam, as illustrated in Figure 1, is adapted to receive a foundation brake rigging lever disposed at right angles to the brake-beam; and with the open ended slot in the strut member as shown, the positioning of the brake-beam relative to the lever is very easily accomplished; while the integral formation of all of the members of the beam provides a brake-beam of great strength and rigidity.

In Figures 5 to 7, I illustrate a portion of a modified form of my integral brake-beam, wherein the one end of the compression member 32 and a portion of a tension member 33 are shown; with the end of the compression member 32 extended beyond the juncture with the tension member and given a somewhat T-shape in cross-section for the purpose of receiving a separate brake-shoe head 34; the latter being shown provided with a T-shaped slot adapted to receive a portion of the extended end of the compression member so as to have the brake-shoe head lap opposite side of the end of the compression member, as shown in Figure 7. The extended end of the compression member is shown provided with a hole 35 adapted to receive the rivet 36 whereby the brake-shoe head is secured to the brake-beam, as shown in Figures 6 and 7.

In Figure 8 I illustrate another modification of my improved brake-beam, in so far as the central strut member is concerned.

In this construction, the strut member 37, like in the previously described construction, is formed integral with the compression member 38 and the tension members 39, 39; and the strut member formed with an enlarged wall portion 40. The enlarged portion 40 is arranged at an angle to the plane of the longitudinal axis of the strut, as shown more clearly in Figure 9; it being understood that this enlargement also extends outwardly on the opposite side of the strut at the same degree of angle. This enlarged portion is provided with an elongated slot 41, which likewise extends through the enlargement at a similar degree of angle as shown. This slot 41 is designed to receive one of the levers of the foundation brake rigging not shown. The opposite sides of the enlarged portion 40 is shown provided substantially centrally with a boss formation 42 arranged intermediate of the ends of the slotted enlargement 40; and this boss formation 42 is provided with a hole 43 adapted to receive a pin whereby a lever of the foundation brake rigging is pivotally secured to the brake-beam.

The strut 37, like strut 16 in Figure 1, is also preferably shown extended beyond the juncture with the tension members 39, 39; and this extension 44 is slotted, as shown at 45, to receive a suitable alternate suspension means therebetween; the bifurcations of the extension 44 being provided with pin or bolt receiving holes 46.

The inner end of extension 44 is also shown provided with laterally disposed apertured lobes 47 (similar to lobes 30) for the purpose of providing a suitable point of attachment of the suspension means whereby the brake-beam is swingingly suspended from the car truck frame.

The type of brake-beam illustrated in Figure 8 is adapted for a right-hand application of the foundation brake rigging lever.

In Figures 10 and 11 I show a further modification of the strut member 48, which, like the previously described structures, is integrally formed with the compression member 49 and with the tension members 50, 50, of which only portions are shown. The strut member 48 is formed with an enlargement 51 of size and width sufficient to enable it to be provided with a pair of intersecting slots 52, 53, thus adapting the brake-beam for either a right or a left hand application of the foundation brake-rigging lever and thus obviating the necessity of making and carrying in stock separate brake-beams for the two methods of brake-lever mountings. That is to say, the slot 52 is adapted for a right-hand application of brake-lever, while slot 53 is adapted for a left-hand application of the brake-lever of the foundation brake-rigging.

In order that the brake-lever may have proper pivotal mounting on the brake-beam in keeping with the angularity or inclination of the slots, I prefer to provide the enlargement 51, with the two pair of lobes 54 and 55, which are apertured to receive a suitable pivot pin for the levers.

The strut member 48, like in the other constructions, is preferably provided with suspension means receiving apertured lobes 56; and also provided with a bifurcated or longitudinally slotted extension 57, which is apertured to receive a pin or bolt whereby alternate suspension means may be secured to the brake-beam.

The ends of the compression members 38 and 49 of the constructions shown in Figures 8 and 10 may either be made like that shown in Figure 5 to receive a separately formed brake-shoe head, or the ends may be made with integral brake-shoe heads, as shown in Figure 1.

I have shown various forms of my invention which I believe are the best embodiments thereof; having described the same in terms employed merely as terms of description and not as terms of limitation, as structural modifications are possible and may be made without, however, departing from the spirit of my invention.

What I claim is:

1. A brake-beam comprising integrally formed compression, strut and tension members; the strut being provided with a pair of intersecting

slots to adapt the brake-beam to a right or left hand application of the foundation brake-rigging lever.

2. A brake-beam comprising integrally formed compression, strut and tension members; the strut being provided with a pair of intersecting slots to adapt the brake-beam to a right or left hand application of the foundation brake-rigging lever; the strut adjacent to said slots being provided with apertured fulcrum pin receiving portions.

3. A brake-beam comprising integrally formed compression, strut and tension members; the strut being enlarged and provided with a pair of intersecting slots arranged at similar but oppositely disposed angles to the horizontal axis of the strut to adapt the brake-beam to a right or left hand application of the foundation brake-rigging lever; the enlarged portion of the strut on opposite sides of each slot being provided with a pair of apertured lobes for receiving the fulcrum pin of the lever.

HENRY E. MUCHNIC.