June 30, 1964 H. L. TAUSSIG 3,139,165

MULTI-PURPOSE CONTAINER FOR CLOTHING

Filed May 13, 1963 3 Sheets-Sheet 1

FIG. 1

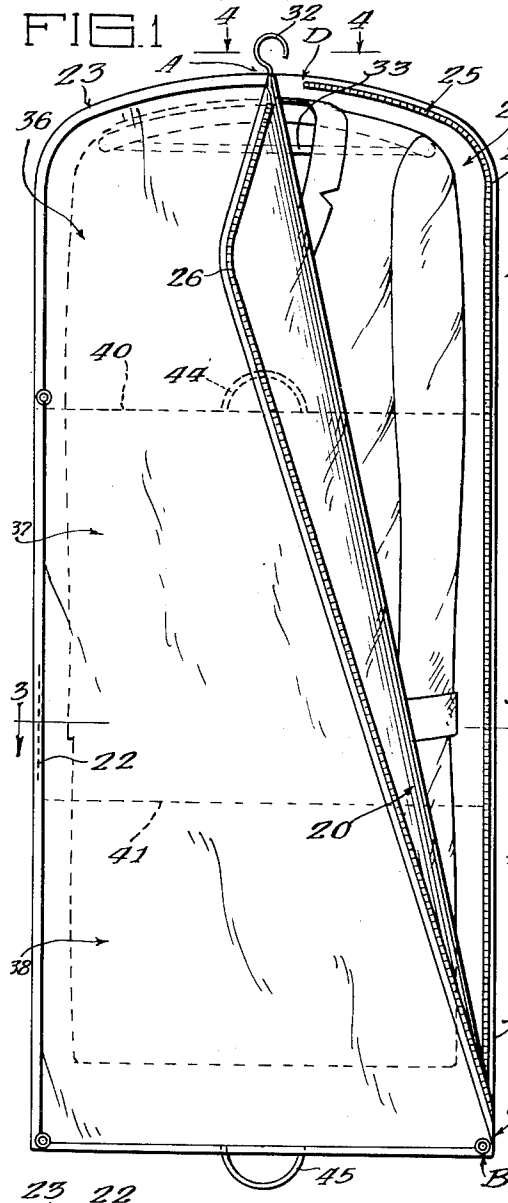

FIG. 2

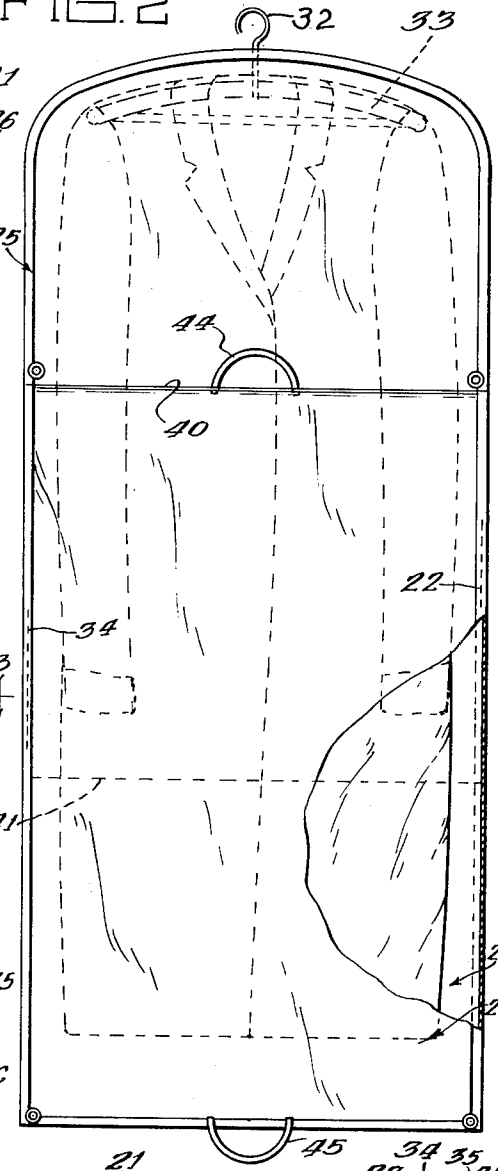

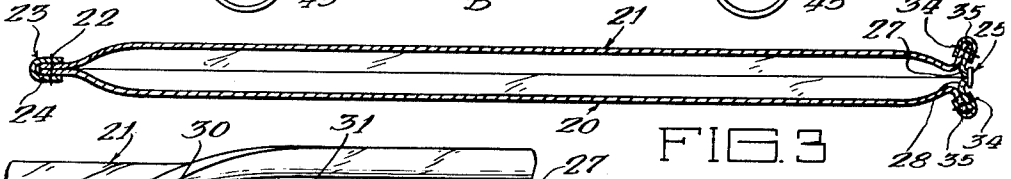

FIG. 3

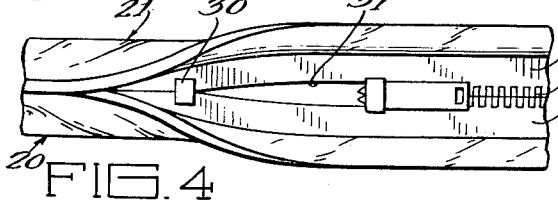

FIG. 4

Inventor:
Howard L. Taussig
By: Hofgren, Wegner, Allen, Stellman & McCord
Attorneys

June 30, 1964 H. L. TAUSSIG 3,139,165

MULTI-PURPOSE CONTAINER FOR CLOTHING

Filed May 13, 1963 3 Sheets-Sheet 2

FIG. 5

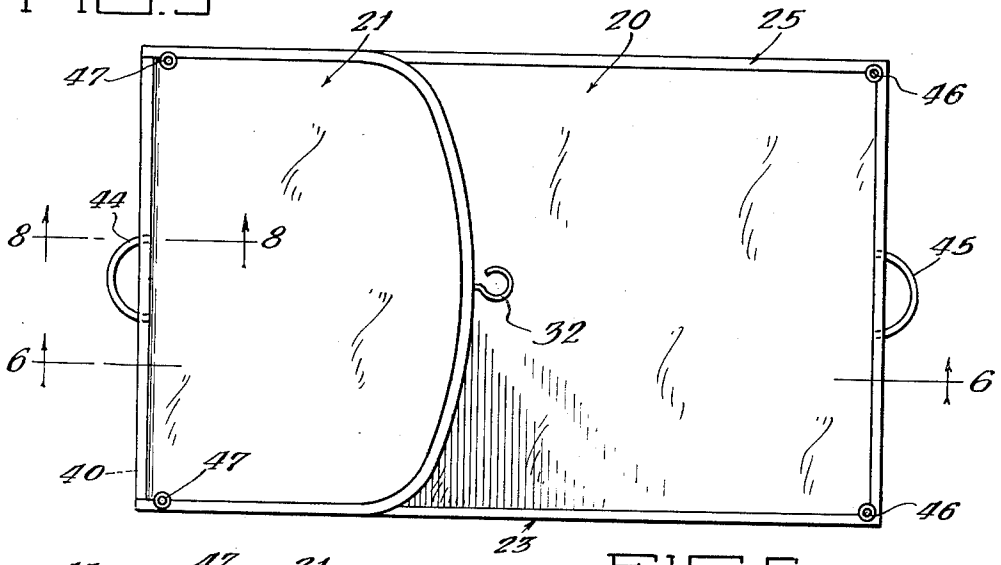

FIG. 6

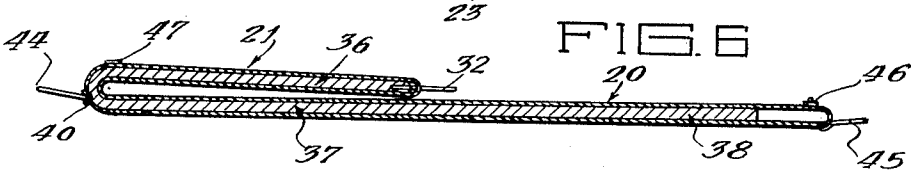

FIG. 7

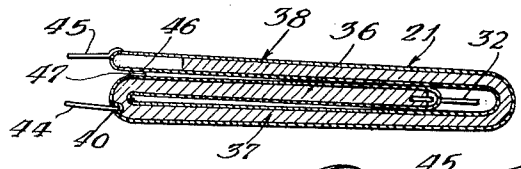

FIG. 8

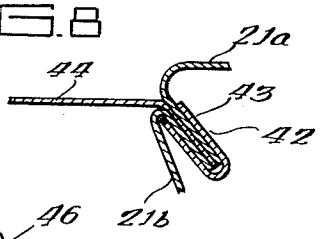

FIG. 10

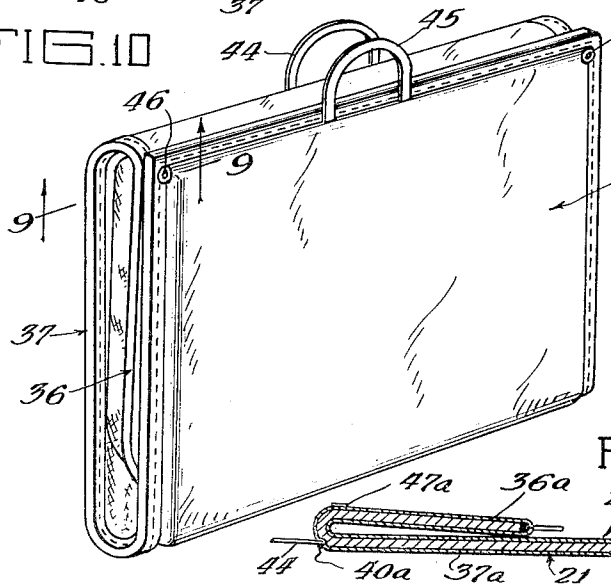

FIG. 9

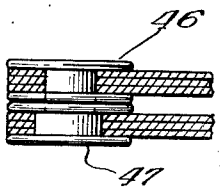

FIG. 15

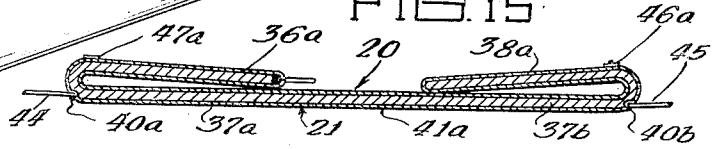

June 30, 1964 H. L. TAUSSIG 3,139,165

MULTI-PURPOSE CONTAINER FOR CLOTHING

Filed May 13, 1963 3 Sheets-Sheet 3

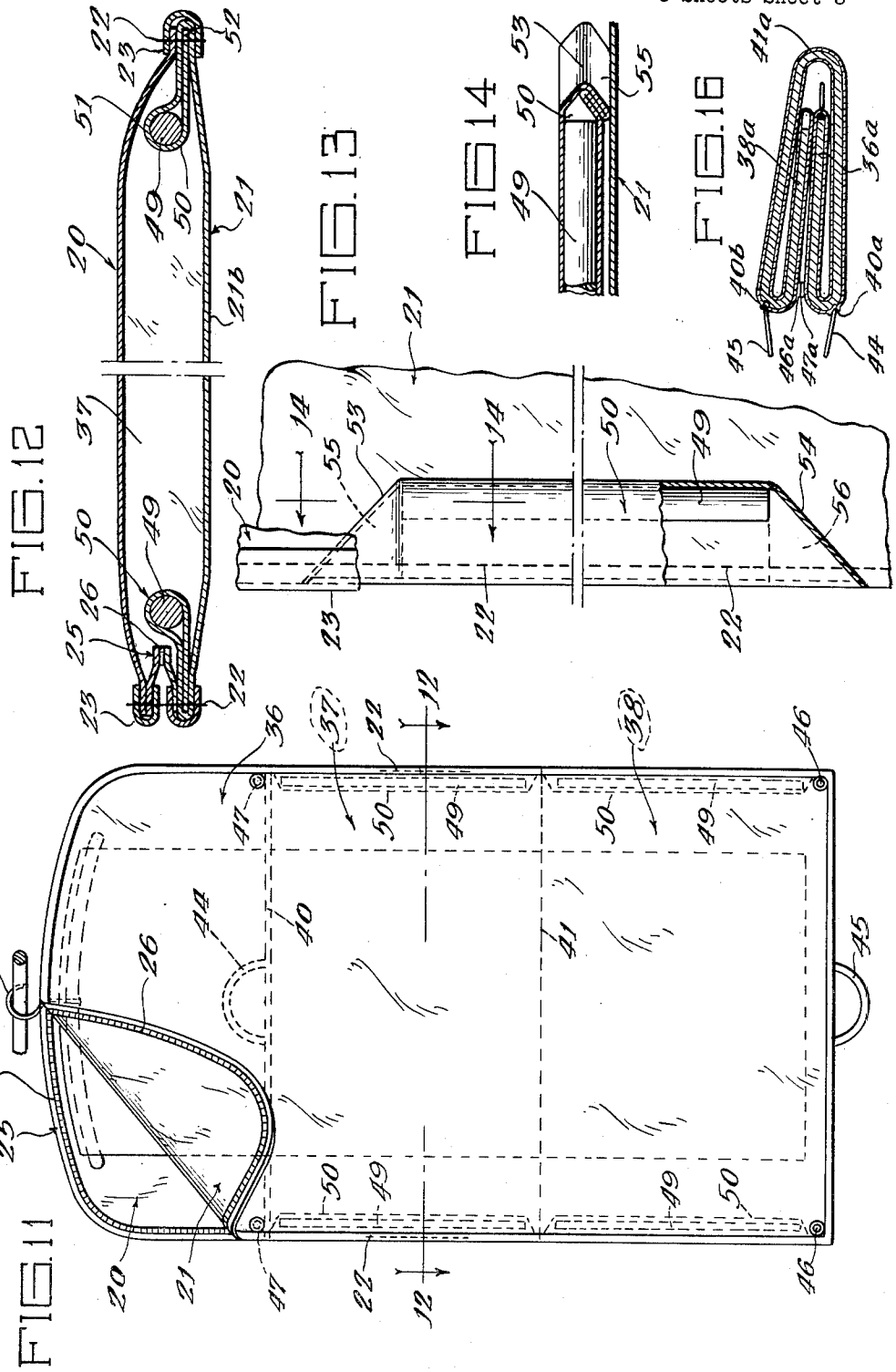

United States Patent Office 3,139,165 Patented June 30, 1964

3,139,165

MULTI-PURPOSE CONTAINER FOR CLOTHING

Howard L. Taussig, % Beaut-Ease Products Co., 1038 N. Ashland Ave., Chicago 22, Ill.

Filed May 13, 1963, Ser. No. 279,914
11 Claims. (Cl. 190—43)

The present invention relates to a container for suits, dresses and the like, and more particularly to a multi-purpose container for such clothing which can be suspened from a support or folded to form a carrying bag as desired.

The present invention relates to light clothing containers intended primarily to accommodate one or two suits or dresses. The container may be hung in suspended position from a closet rod or hook to store units or dresses not being used. It is also uniquely constructed and arranged to be folded to afford a plurality of juxtaposed container portions which may be detachably fastened together to form a convenient carrying bag assembly. The bag assembly thus formed from the folded and juxtaposed container sections obviates the need of any built-in transverse supporting material such as hardware or heavy gussets. The carrying bag obtains its lateral stability from its unique structural arrangement and from the lateral support provided by the enclosed clothing within the container. Furthermore, the folded container portions are arranged so that the enclosed clothing within each container portion mutually gives transverse support to the clothing within other container portions to retain the clothing in a smooth, wrinkle-free condition even when carried.

One suit and plural suit clothing containers now in use are not adapted to be used as carrying bags. Such clothing containers are normally simply thrown over the arm and carried in an attempt to prevent wrinkling of the enclosed suits or dresses, the arm actually affording a transverse support for the container, which support of course is not necessary in the clothing container of the present invention.

The primary object of the present invention is to provide a new and improved clothing container which is adapted to be used also as a carrying bag assembly without utilizing the supporting hardware present in the normal suitcase or carrying bag.

Another object is to provide a carrying bag capable of being folded into a plurality of container portions and having appropriate fastening means for retaining the portions in folded position.

A further object is to provide a new and improved closure means for such a container.

Still another object is to provide spaced longitudinally extending pockets in the marginal edges of the clothing container, the pockets being adapted to receive reinforcing members for imparting rigidity to the opposite longitudinal marginal edges of the container portions.

Still another object is to provide a clothing container constructed to afford two transverse sections or lines of fold defining three container portions adapted to be juxtaposed one with the other.

Yet another object is to provide a clothing container constructed to afford two transverse sections or lines of fold defining three container portions adapted to be juxtaposed one with the other, spaced handle members being provided on the clothing container so that, when the clothing container is in folded position, the handle members will lie adjacent one another and provide a convenient means for carrying the bag assembly.

The invention is illustrated in the preferred embodiment in the accompanying drawings, in which:

FIG. 1 is a side elevational view of the clothing container showing the closure means opened to disclose a coat-like garment within the clothing container;

FIG. 2 is a view similar to FIG. 1 but from the backside and being partly broken away and showing the two handle members which are used when the clothing container is folded to form a carrying bag assembly;

FIG. 3 is an enlarged sectional view taken along line 3—3 of FIG. 1 but showing the zipper closure means in closed position;

FIG. 4 is a greatly enlarged view taken along line 4—4 of FIG. 1 to illustrate the unique zipper closure means which affords an opening for the hook of a conventional hanger when it is desired to suspend the clothing container from a convenient support;

FIG. 5 is a top plan view of the clothing container reclining on a flat surface with the upper container portion being folded back over the central container portion;

FIG. 6 is a sectional view taken along line 6—6 of FIG. 5;

FIG. 7 is a sectional view similar to FIG. 6 but showing the lower container portion folded back into superposed relation with the top and central container portions;

FIG. 8 is a greatly enlarged sectional view taken as indicated on line 8—8 of FIG. 5 and showing the manner in which the handle member is secured along the line of fold between the top and the central container portions;

FIG. 9 is a greatly enlarged fragmentary sectional view taken as indicated along line 9—9 of FIG. 10 showing fastening means for retaining the container portions in folded position;

FIG. 10 is a perspective view of the clothing container folded to form a carrying bag assembly, the view illustrating the preferred outboard position of the carrying handles and the mutual transverse support afforded between cooperative adjacent container portions and the enclosed clothing;

FIG. 11 is a front elevational view somewhat similar to FIG. 1 but illustrating a modified form of the invention, the container being of the type to accommodate men's suits;

FIG. 12 is a greatly enlarged broken sectional view taken as indicated on line 12—12 of FIG. 11;

FIG. 13 is a greatly enlarged fragmentary broken view, partly in section, illustrating the fabric pocket or envelope formed in a longitudinal marginal edge of the central and the lower container portions for receiving a reinforcing member;

FIG. 14 is a sectional view taken as indicated on line 14—14 of FIG. 13 to illustrate the manner in which the end of the envelope or pocket is closed by the folded fabric to retain the reinforcing member in position;

FIG. 15 is a sectional view, generally similar to the view in FIG. 6, but of a further modified form of the invention showing a clothing container provided with three transverse lines of fold to afford four container portions; and

FIG. 16 is a view of the clothing container of FIG. 15 showing the four container portions superposed and fastened to form a carrying bag assembly in a manner generally similar to that shown in FIG. 7.

In the embodiment illustrated, a front sheet of flexible material, generally designated **20**, is appropriately united in its marginal edges to a similar back sheet of flexible material, generally designated **21**, as by stitching **22**. The sheets of material may be formed of plastic or of woven synthetic or natural cloth material.

Referring to FIG. 1, the front and back sheets are preferably permanently joined by stitching **22** in a marginal edge seam, generally designated **23**, extending from point A at the top of the clothing container peripherally to point B at the bottom corner of the clothing container.

The seam is reinforced by conventional flexible tape **24**, as best shown in FIG. 3.

The remainder of the periphery of the clothing container from point C to point D (FIG. 1) is provided with a closure means, generally designated **25**, to provide access as desired to the interior of the clothing container. It is preferred that the closure means **25** extend substantially from the lower marginal edge of the container to substantially the midpoint of the top marginal edge of the container so that suits, coats or dresses to be stored within the container can be readily placed therein and removed therefrom.

In the preferred embodiment, the closure means is a zipper **26** mounted on supporting flexible strips **27** and **28** which are joined at their upper end by a clip **30**, as shown in FIG. 4. The zipper portions on each of the strips **27** and **28** stop short of the clip **30** so that when the zipper is in closed position, as shown in FIG. 4, an opening **31** is provided at the top of the clothing container to accommodate a projecting hook **32** of a hanger **33**, as shown in FIGS. 1 and 2. The strips **27** and **28** which carry the zipper **26** are united with adjacent marginal edge portions of the front and back sheets by stitching **34** passing through embracing flexible tapes **35**, as shown in FIG. 3.

It will be noted that the structure of the present clothing container is formed without any side wall portions. That is, the front and back sheets of the flexible material or fabric are brought together in substantially line contact on the left edge of FIG. 1 and approximately in line contact on the right edge of FIG. 1. Of course, the zipper **26** provides slight additional bulk in the right edge of FIG. 1 but the zipper itself is flexible for folding, as will subsequently be explained.

The clothing container illustrated in FIGS. 1–10 actually embodies an upper container portion **36**, a central container portion **37** and a lower container portion **38**. The clothing container, and thus its various portions **36**, **37** and **38**, may be varied in width and length to accommodate varying sized garments. For example, a suitable container for a normal suit is 40 inches long and 24 inches wide, a "size 44" suits being 36 inches from the collar to the tip of the coat. A suitable clothing container for dresses is 52 inches long and approximately 21 inches wide.

In order to facilitate carrying the clothing container, it is contemplated that the container portions may be folded into juxtaposition so as to provide a carrying bag assembly. To this end, the structure of the container is formed so as to afford permissible flexible transverse sections or lines of fold between adjacent container portions. Thus, line or section of fold **40** (shown in dotted line) is provided between upper portion **36** and central portion **37** and line or section of fold **41** is provided between central portion **37** and lower portion **38**, as shown in FIG. 1.

As herein shown, the back sheet of flexible material **21** may be made up of two separate portions which are joined together along the line of fold **40**. As best shown in FIGS. 5 and 8, the upper sheet portion **21***a* is united with the lower sheet portion **21***b* by stitching **42** passing through embracing tape **43**. The reason for this seam along the line of fold **40** is that it provides a convenient, strong and secure edge for attaching a first handle member **44**, as shown in FIG. 8, the handle member being secured by the stitching **42**. When the upper container section **36** is folder back over the central container section **37** (FIG. 6), the line of fold is generally along the seam carrying the handle **44**, but with the handle slightly on the outboard side of the arcuate section or line of fold, as illustrated in both FIGS. 6 and 7.

The line of fold **41** preferably is not clearly defined by any seam, and is actually an arcuate transverse section or area of fold which permits the lower container portion to be juxtaposed with the upper and central portions,

as shown in FIG. 7. A second handle member **45** is secured centrally of the bottom length of the marginal edge seam **23** in a manner similar to that illustrated in FIG. 8 and described above. Thus, when the three container portions are juxtaposed in the manner illustrated in FIG. 7, the hanger **33** and the top of the garment on it are fully enclosed and lie adjacent the line of fold **41** while the second handle member **45** and the first handle member **44** are positioned adjacent each other, extending from the outboard side of each respective container portion and in a position to be used for supporting the carrying bag assembly formed from the clothing container.

Detachable fastening means are also provided and appropriately positioned to cooperate with the various container portions so as to hold the portions in juxtaposition when in carrying bag conformation. The fastening means of the preferred embodiment is best illustrated in FIG. 9 and includes male fastener portions **46** and female fastener portions **47** which cooperate to form friction snap fasteners. Male fastener portions **46** are located adjacent the bottom corners of the lower container portion **38** while the female fastener portions **47** are located adjacent the line of fold **40** at the lower corners of the upper container portion **36**. The position of the fasteners when in fastening position is illustrated in FIG. 10 where the fastener portions **46**, **47** join the lower container portion **38** to the upper container portion **36** approximately at its line of fold.

Because of the formation of a plurality of container portions, a carrying bag assembly is formed which is self-sustaining without the provision of any intermediate rigid transverse supports. The clothing within the respective portions **36**, **37** and **38** and the portions themselves mutually cooperate to exert sufficient forces transverse of the carrying bag conformation to retain the clothing portions in each container section in their original, smooth and wrinkle-free condition. Explaining it another way, the lower portion and its fastening means cooperate with the fastening means adjacent the line of fold **40** to provide sufficient transverse support to sustain the garments in their original position extending upwardly and downwardly from the line of fold **40**; and the sideward pressures of the garments within the container portions **36**, **37** and **38** provide sufficient frictional forces on the tail end of the garment in the container section **38** so that the forces of gravity acting upon the tail portion of the garment in section **38** is not sufficient to cause the garment to slide downwardly toward the line of fold **41** which is at the bottom of the carrying bag conformation (FIG. 10).

A modified form of the invention is illustrated in FIGS. 11–14. The clothing container illustrated in these figures is formed generally similar to the preferred embodiment of FIGS. 1–10, and the container is converted into a portable carrying bag in the same manner as illustrated and described in the preferred embodiment. Thus, similar parts of FIGS. 11–14 will be similarly designated in accordance with the corresponding parts present in the preferred embodiment.

The impovement shown in the modified embodiment of FIGS. 11–14 relates to reinforcing members and to envelope pockets for retaining the reinforcing members in the longitudinal marginal edges of the central and lower container portions **37** and **38** which, when folded into juxtaposed relation, become the two outer portions of the carrying bag assembly, as previously illustrated in FIGS. 7 and 10. As best shown in FIG. 12, an envelope pocket, generally designated **50**, is formed from sheet material which is integral with the lower sheet portion **21***b* of the back sheet **21**. One of such pockets **50** is formed in each of the opposite longitudinal marginal edges of the central portion **37** and of the lower portion **38**. As best shown in the right hand portion of FIG. 12, the back sheet extends into the marginal seam **23** then is looped inwardly of the container as at **51** and finally a free end **52** is positioned within the seam **23** so that stitching **22** holds the

marginal edges of the front and back sheets **20** and **21** together with the intermediate portions of the pocket forming material.

The ends of the pockets are closed in the manner shown in FIGS. 13 and 14 after a rigid reinforcing rod **52** is placed in each of the pockets. The opposite ends of the pocket **50** are tucked and folded on line **53** and on line **54** and the folded diagonal portions **55** and **56** are in turn secured within the seam **23** by the stitching **22**. Thus, the longitudinal reinforcing rods are permanently secured in position, but adjacent rods on each side of the clothing container are longitudinally spaced so as to provide ease of folding about the transverse section or line of fold **41**.

When the clothing container of FIG. 11 is folded into a carrying bag assembly, as shown in FIG. 10, the reinforcing rods disposed internally of the container give a firm consistency to the opposite longitudinal marginal edges of the two outer container portions, namely central portion **37** and lower portion **38**. Except that the zipper **26** is shown on the opposite side in FIG. 11, the modified embodiment is in all other respects similar to and operates in the same way as the embodiment shown in FIGS. 1–10. The clothing container of FIG. 11 is of a size normally used to accommodate a man's suit, while the clothing container shown in FIG. 1 is of a size normally used to accommodate a man's coat or woman's dresses.

A further modification is shown in FIGS. 15 and 16. This modification illustrates the clothing container adapted to be folded generally along three lines of fold, which three lines of fold divide the container into four container portions which are adapted to be juxtaposed generally in the manner shown in FIG. 7. In this embodiment also, the respective parts are generally similarly arranged and similarly secured together as in the embodiment shown in FIGS. 1–10.

The handle members **44** and **45** are each preferably secured in transverse seams defining transverse sections or lines of fold **40***a* and **40***b*. A central transverse section or line of fold **41***a* divides the clothing container into central container portions **37***a* and **37***b* while the lines of fold **40***a* and **40***b* provide approximate lines of demarcation for upper container portion **36***a* and lower container portion **38***a* respectively. It will be noted that the handle members **44** and **45** are both positioned so as to be outboard when the three fold container is folded to form a carrying bag assembly, as shown in FIG. 16. The fastener portions **46***a* and **47***a* are appropriately positioned so that, when the clothing container is in its folded position (FIG. 16), the fastener portions assist in maintaining the container portions in proper position in the carrying bag assembly.

The embodiment of FIGS. 15 and 16 is especially beneficial for long garments because the garments further assist in supporting themselves in wrinkle-free condition because of the double U-shaped configuration formed by container portions **36***a*, **37***a* and **37***b*, **38***a* respectively.

It is also apparent in the embodiment shown in FIG. 1 that shorter garments which occupy only upper portion **36** and central portion **37** may be readily accommodated. When the garment occupies only the two upper container portions, the lower container portion may still be folded about to place the three container portions in juxtaposition and the lower portion may be fastened in the manner shown in FIG. 10 so that the upper edge of the carrying bag assembly on which the handles are secured still gains support from the lower portion **38**.

The foregoing detailed description is given for clearness of understanding only, and no unnecessary limitations should be understood therefrom for some modifications will be obvious to those skilled in the art.

I claim:

1. A protective covering unit for carrying and storing clothing, comprising: a container having a front sheet and a back sheet each formed of flexible material and appropriately peripherally joined to each other to form an inner chamber in the container of sufficient size to receive garments of wearing apparel in suspended position, the container being foldable along transverse lines spaced longitudinally of the container to provide a top container portion, a central container portion and a lower container portion; and a pair of handle members secured to the container in longitudinally spaced relation, the handles being positioned adjacent each other in carrying position when the top, central and lower container portions are folded into juxtaposition so that the top container portion is disposed between the central and lower container portions to conjointly form a portable carrying bag assembly.

2. A protective covering unit for carrying and storing clothing, comprising: a container having a front and a back each appropriately peripherally joined to the other to form an inner chamber in the container of sufficient size to receive a garment of wearing apparel in suspended position, the container having an upper container portion, a central container portion and a lower container portion and a pair of intermediate transverse flexible sections one each between an adjacent pair of said portions so that said portions can be folded into juxtaposition with the upper portion disposed between the central and lower container portions to conjointly form a carrying bag assembly; closure means on the periphery of the container to provide access to the inner chamber; and a pair of handle members, one secured medially to an end of the container and the other secured medially of the transverse section between the upper and central container portions so that the handle members are positioned adjacent each other when the container is folded to provide said carrying bag assembly.

3. A protective covering unit for carrying and storing clothing as specified in claim 2, in which fastening means are provided releasably to retain the container portions in juxtaposition.

4. A protective covering unit for carrying and storing clothing as specified in claim 3, in which the fastening means are positioned laterally of each of the handle members so as to be brought into position for releasable engagement when the container is folded to provide said carrying bag assembly.

5. A protective covering unit for carrying and storing clothing as specified in claim 2, in which the closure means extends substantially the entire length of one longitudinal edge of the container from a position adjacent the bottom peripheral edge of the lower container portion to a position medially of the top peripheral edge of the upper container portion.

6. A protective covering unit for carrying and storing clothing as specified in claim 3, in which the closure means is an elongated zipper device having a clip spaced from one of its ends to afford an opening for the hook of a clothes hanger between said clip and said one end, the opening being positioned medially of the top peripheral edge of the upper container portion.

7. A protective covering unit for carrying and storing clothing, comprising: a container having a front sheet and a back sheet each formed of flexible material and appropriately peripherally joined to each other to form an inner chamber in the container of sufficient size to receive garments of wearing apparel in suspended position, the container being foldable along transverse lines spaced longitudinally of the container to provide a top container portion, an upper central container portion, a lower central container portion and a lower container portion; and a pair of handle members secured to the container in longitudinally spaced relation, the handles being positioned adjacent each other in carrying position when the four container portions are folded into juxtaposition so that the top container portion and the lower container portion are disposed between the upper and lower central container

portions to conjointly form a portable carrying bag assembly.

8. A protective covering unit for carrying and storing clothing as specified in claim 7, in which fastening means are positioned laterally of each of the handle members so as to be brought into position for releasable engagement when the container is folded to provide said carrying bag assembly.

9. A protective covering unit for carrying and storing clothing as specified in claim 7, in which the closure means extends substantially the entire length of one longitudinal edge of the container from a position adjacent the bottom peripheral edge of the lower container portion to a position medially of the top peripheral edge of the upper container portion.

10. A protective covering unit for carrying and storing clothing, comprising: a container having a front sheet and a back sheet each formed of flexible material and appropriately peripherally joined to each other to form an inner chamber in the container of sufficient size to receive garments of wearing apparel in suspended position, the container being foldable along transverse lines spaced longitudinally of the container to provide a top container portion, a central container portion and a lower container portion, the container portions being foldable into juxtaposition to form a portable carrying bag assembly in which the top container portion is disposed between the central and lower container portions so that the adjacent portions of the front sheet, back sheet and enclosed garment mutually frictionally cooperate so as to be maintained relative against movement in their folded relation during carrying of the portable bag assembly; and a pair of handle members secured to the container in longitudinally spaced relation, the handle members being positioned adjacent each other in carrying position when the container portions are folded into juxtaposition to form the portable carrying bag assembly.

11. A protective covering unit for carrying and storing clothing, comprising: a container having a front sheet and a back sheet each formed of flexible material and appropriately peripherally joined to each other to form an inner chamber in the container of sufficient size to receive garments of wearing apparel in suspended position, the container being foldable along transverse lines spaced longitudinally of the container to provide a top container portion, a central container portion and a lower container portion; a pair of handle members secured to the container in longitudinally spaced relation, the handles being positioned adjacent each other in carrying position when the top, central and lower container portions are folded into juxtaposition so that the top container portion is disposed between the central and lower container portions to conjointly form a portable carrying bag assembly; and elongated reinforcing members positioned adjacent each of the opposite longitudinally extending marginal edges of each container portion to provide rigidity in said edges when the container portions are folded into the carrying bag assembly, the reinforcing members being arranged in end to end relation and being longitudinally spaced to permit the container portions to be folded into juxtaposition.

References Cited in the file of this patent

UNITED STATES PATENTS

2,087,211	Marbury et al.	July 13, 1937
2,132,337	Whiteman	Oct. 4, 1938
2,177,906	Miller	Oct. 31, 1939
2,325,806	Simmons	Aug. 3, 1943
2,637,424	Duskin	May 5, 1953
2,740,506	Davis	Apr. 3, 1956
2,755,896	Breglia	July 24, 1956