Nov. 26, 1946. J. A. RADO 2,411,695

CLIPPING SYSTEM

Filed May 14, 1943

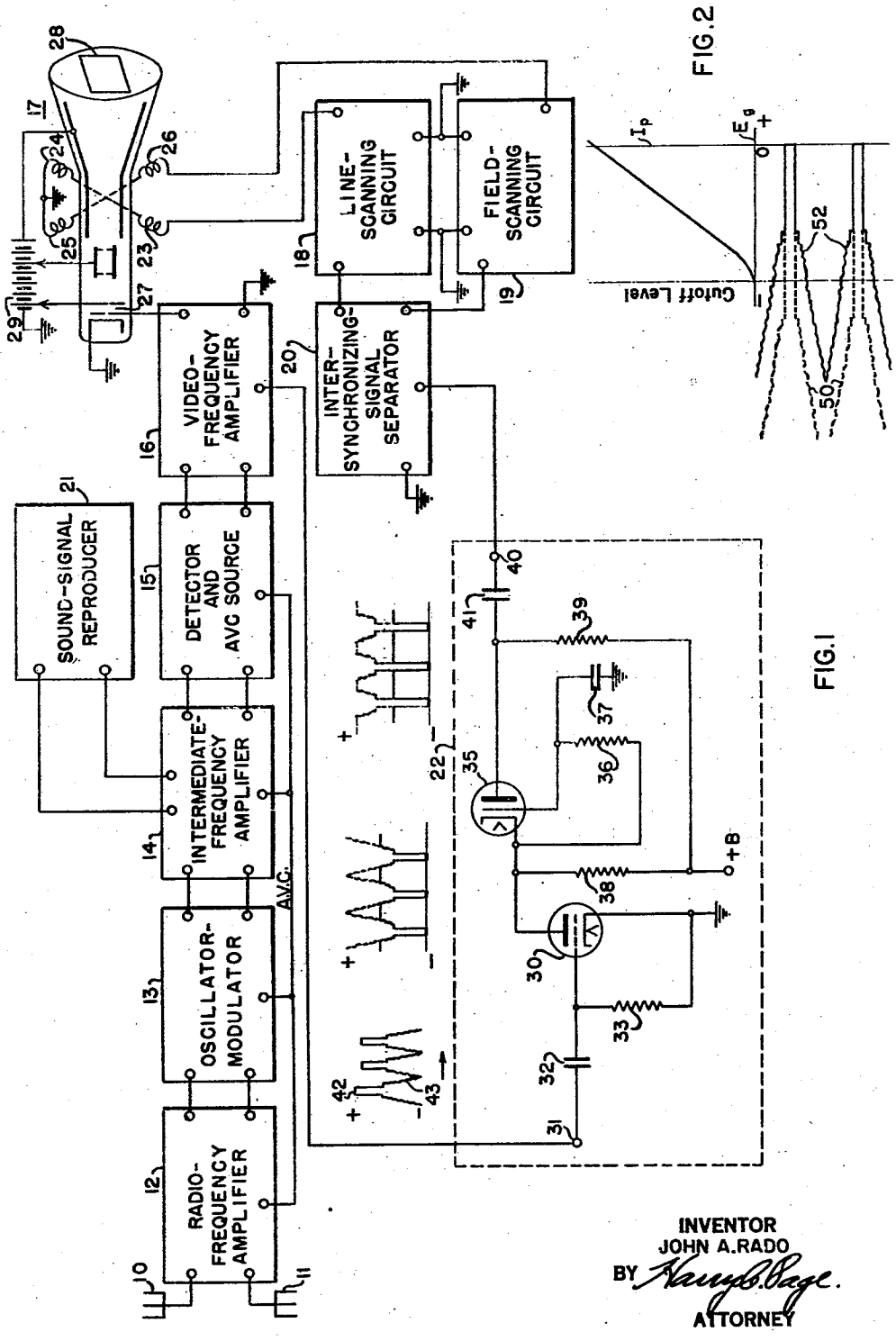

FIG. 1

FIG. 2

INVENTOR
JOHN A. RADO
BY Harry B. Page.
ATTORNEY

Patented Nov. 26, 1946 2,411,695

UNITED STATES PATENT OFFICE

2,411,695

CLIPPING SYSTEM

John A. Rado, Great Neck, N. Y., assignor, by mesne assignments, to Hazeltine Research, Inc., Chicago, Ill., a corporation of Illinois

Application May 14, 1943, Serial No. 487,007

6 Claims. (Cl. 250—27)

1

This invention relates to a system for asymmetrically clipping an applied signal, and particularly concerns an arrangement for effectively clipping all of the video-frequency components from a composite television signal which includes synchronizing-signal components and associated video-frequency components.

For some purposes it is desirable to employ a vacuum-tube clipper which is adapted to translate the desired portion of a wave signal and to clip the signal sharply at a predetermined signal level. Clippers of the anode current cutoff type are generally most effective for this purpose. In certain television systems which employ clippers of the general type under consideration, it has been found that more than one clipping stage is necessary to clip completely the unwanted portions of the wave signal. These clipping arrangements ordinarily utilize an intermediate stage for amplifying a wave which was previously clipped at a predetermined level by the first clipping stage. This intermediate stage also reverses the polarity of the output wave of the first clipping stage, whereby the amplified wave is presented with the proper polarity for clipping in the second stage. This last-mentioned stage clips the amplified wave and usually separates completely the video-frequency components from the synchronizing-signal components. In some multi-tube arrangements, clipping is accomplished by the last tube only, the preceding tubes serving only as amplifiers. A pair of amplifiers is often required in order that the wave signal may be applied to the clipping tube with the required amplitude and polarity for clipping. These prior art arrangements, therefore, which effect clipping by anode current cutoff generally are complicated and employ a relatively large number of tubes.

It is an object of the invention, therefore, to provide an improved clipper of the anode current cutoff type which is not subject to one or more of the above-mentioned disadvantages of prior art arrangements.

It is another object of the present invention to provide an improved multi-tube clipper of the anode current cutoff type which eliminates the need of an intermediate amplifier stage but which includes the advantages of an amplifier stage.

In accordance with the present invention, there is provided a system for asymmetrically clipping an applied signal having recurrent peaks comprising a first vacuum tube having input and output electrodes, and means for applying the signal to the input electrodes with such polarity

2

that the aforesaid peaks are effective to increase the conductance of the tube. An anode load impedance is coupled to the anode of the first tube. The system also includes means for causing the peaks of the applied signal to be stabilized in the input circuit of the first vacuum tube, the amplitude of the applied signal being so related to the operating characteristics of the first tube that anode-current clipping is effected therein, a second vacuum tube having input and output electrodes, and means effectively comprising only passive coupling elements coupling the above-mentioned load impedance to the input electrodes of the second tube for applying thereto a signal translated by the first tube with such polarity that the above-mentioned peaks are effective to increase the conductance of the second tube. Furthermore, the system includes means for causing the recurrent peaks of the signal to be stabilized in the input circuit of the second tube. The amplitude of this signal which is applied to the second tube is so related to the operating characteristic of the second tube that anode current clipping is effected in the second tube. The system also includes a means coupled to the output electrodes of the second tube for deriving a clipped output signal.

For a better understanding of the present invention, together with other and further objects thereof, reference is had to the following description taken in connection with the accompanying drawing, and its scope will be pointed out in the appended claims.

In the accompanying drawing, Fig. 1 is a circuit diagram, partly schematic, of a complete television receiver including a vacuum-tube clipping system embodying the invention, while Fig. 2 is a graph of a tube characteristic used in explaining the operating characteristics of the clipping system of Fig. 1.

Referring now more particularly to Fig. 1, the system illustrated comprises a television-signal receiver of the superheterodyne type including an antenna system 10, 11 connected to a radio-frequency amplifier 12 of one or more stages, to which is connected in cascade, in the order named, an oscillator-modulator 13, an intermediate-frequency amplifier 14 of one or more stages, a detector and A. V. C. source 15, a video-frequency amplifier 16 of one or more stages, and an image-reproducing device 17. A line-scanning circuit 18 and a field-scanning circuit 19 are coupled to the output circuit of the video-frequency amplifier 16 through a clipping system 22 and an intersynchronizing-signal sep-

arator 20. The output circuits of the line-scanning circuit 18 and the field-scanning circuit 19, respectively, are coupled to the line-scanning windings 23, 24 and the field-scanning windings 25, 26 of the image-reproducing device 17. The image-reproducing device 17 includes a conventional electron-gun structure 27 and a fluorescent screen 28 and is provided with a suitable source of unidirectional voltage 29. An automatic amplification-control potential derived from unit 15 is applied to one or more tubes of radio-frequency amplifier 12, oscillator-modulator 13, and intermediate-frequency amplifier 14 by way of the connection indicated as A. V. C. in a conventional manner. A sound-signal reproducer 21 of conventional design is coupled to an output circuit of intermediate-frequency amplifier 14. The stages or units 10 to 21, inclusive, may all be of conventional construction so that detailed illustration and description thereof are deemed unnecessary herein.

Referring briefly to the operation of the system described above, television signals intercepted by antenna circuits 10, 11 are selected and amplified in radio-frequency amplifier 12 and coupled to the oscillator-modulator 13, wherein they are converted to intermediate-frequency signals which, in turn, are selectively amplified in the intermediate-frequency amplifier 14 and delivered to the detector 15. The modulation components of the signal are derived by detector 15 and are supplied to the video-frequency amplifier 16 wherein they are amplified and from which they are supplied, in the usual manner, to a brilliancy-control electrode of the image-reproducing device 17. Unstabilized modulation components of the signal are also supplied by the video-frequency amplifier 16 to the clipping system 22 which is connected in circuit with the intersynchronizing-signal separator 20 wherein synchronizing signals of different types are separated and applied to the synchronizing control elements of circuits 18 and 19. The intensity of the scanning ray of device 17 is modulated or controlled in accordance with the video-frequency voltages which are applied to the control grid in the usual manner. Scanning waves are developed in line-scanning circuit 18 and field-scanning circuit 19 and are applied to the scanning elements of the image-reproducing device 17 to produce electric scanning fields, thereby to deflect the scanning ray in two directions normal to each other so as to trace a rectilinear pattern on the screen, thereby to reconstruct the transmitted image. Sound signals accompanying the television signals are reproduced by unit 21 in a conventional manner, while the bias derived from unit 15 and applied to the preceding stages serves to maintain the signal-input amplitude to detector 15 within a relatively narrow range for a wide range of received-signal intensities.

Referring now to the portion of Fig. 1 embodying the present invention, there is provided a system 22 for asymmetrically clipping an applied signal having recurrent peaks. This system comprises a first vacuum tube such as a triode 30 having input and output electrodes, and means for supplying a signal output from amplifier 16 to the input electrodes of the tube with such polarity that the peaks of the applied synchronizing signal are effective to increase the conductance of the tube. This means comprises a coupling condenser 32 connected between the control electrode of tube 30 and an input terminal 31 and a grid-leak resistor 33 in circuit between the control electrode and the grounded cathode of the tube. The constants of condenser 32 and resistor 33 are proportioned to have a time constant which is long compared to the synchronizing-signal period, so that these elements act as a stabilizing or self-biasing means for the tube. An anode load impedance comprising resistor 38 is connected between the anode and a source of space current indicated as +B. A second vacuum tube 35, which may also be a triode and which preferably has a sharp anode current cutoff characteristic, has its cathode connected directly to the anode of tube 30 while its control electrode is connected to ground through a condenser 37. A grid-leak resistor 36 is connected between the control electrode and cathode of tube 35. The time constant of resistor 36 and condenser 37 is long compared to the synchronizing-signal period to provide a self-biasing or stabilizing circuit for tube 35. The anode of the second vacuum tube 35 is connected to the source +B through a load resistor 39 and to an output terminal 40 through a coupling condenser 41.

The system 22, therefore, includes means effectively comprising only passive coupling elements which couple the load impedance 38 to the input electrodes of the second tube 35, for applying to the second tube the signal translated by the first tube with such polarity that the recurrent peaks of the synchronizing signal are effective to increase the conductance of the second tube. By passive coupling elements are meant those elements which include no power amplifying devices. As just described, the passive coupling means between the tube 30 and the tube 35 comprises the connection between the anode of tube 30 and the cathode of tube 35, and the grid-leak condenser combination 36, 37 which is connected to the control electrode of the latter tube.

In considering the operation of the portion of Fig. 1 comprising the present invention, it will first be assumed that an unstabilized television signal, as shown at the upper left of tube 30, is applied to the input circuit thereof from the video-frequency amplifier 16. In this composite signal, recurrent positive peaks or tips 42 represent the synchronizing-signal components and the lower irregular portions 43 represent video-frequency components which are to be removed by the clipping system before the resultant signal is translated to the intersynchronizing-signal separator 20. Grid rectification takes place in the input circuit of tube 30 and develops a grid bias which stabilizes the peaks 42 of the input signal substantially at the zero-voltage level of the grid voltage-plate current characteristic of the tube.

The recurring positive peaks of the composite input signal are effective to increase the conductance and the space current of the tube 30. The negative peaks of the translated signal developed across load resistor 38 are applied to the input circuit of tube 35 with the peaks effectively positive at the grid due to the fact that the grid of this tube is effectively grounded with respect to the synchronizing-signal component while its cathode potential fluctuates in accordance with the signal applied thereto. The time constant of the resistor-condenser combination 36, 37 is long with respect to the synchronizing-signal period so that the signal is effectively stabilized at the zero-voltage level of the grid voltage-plate current characteristic of tube 35 as shown in Fig. 2. The amplitude of the signal applied to the second tube 35 is so related to its grid voltage-plate cur-

rent characteristic that anode current clipping is effective in the second tube to produce an output signal in which video-frequency components are entirely absent. The first tube **30** also preferably has a sharp cutoff characteristic and partial clipping by anode current cutoff is preferably effected therein although the tube may operate primarily as an amplifier.

The load resistors **38** and **39** are preferably so proportioned that the resistance value of resistor **39** is a small fraction of the resistance value of resistor **38**. Also the circuit is preferably so proportioned that the sum of the resistance values of resistor **39** and the minimum anode-cathode resistance of tube **35** is small with respect to the value of resistor **38**.

Due to this proportioning of load impedances, a substantial variation of the gain of the first tube **30** is provided by the action of the second tube **35** which enhances the effectiveness of the clipping action accomplished by the system. The space current path of tube **30** during the intervals of the synchronizing pulses comprises resistor **38** shunted by the anode-cathode resistance of tube **35** in series with resistor **39**. However, during the greater portion of each interval between the synchronizing pulses the resistance of tube **35** is very high so that the space current of tube **30** flows almost entirely through resistor **38**, which has a comparatively high resistance value. The gain of tube **30** during these intervals is, therefore, substantially increased and, since the tips of the synchronizing signals are stabilized at the zero grid-voltage level of tube **35**, the video-frequency portions of the signal are shifted well beyond the cutoff point of tube **35**, resulting in a clean synchronizing-signal output.

This action is illustrated in Fig. 2 which shows a portion of a television signal **52** which is related to the grid voltage-plate current characteristic of the second tube **35** to illustrate the action if the above-mentioned optimum proportioning of load impedances is not used. A portion of a second television signal **50**, shown in dotted lines, is also illustrated to indicate the action where the optimum proportioning is provided. It will be seen that signal **52** includes residual video-frequency components which are not removed by anode current clipping in the second tube, while the entire undesired video-frequency components of signal **50** are displaced well beyond the cutoff level so that an ideal synchronizing signal is translated by tube **35** to its output circuit.

The control electrode of tube **35** also effectively provides a means for reducing capacitive coupling between the cathode and anode electrodes of that tube thereby to prevent coupling of video-frequency components, developed across load resistor **38**, to output terminal **40** during the times tube **35** is nonconductive. This obviates the need of a multi-grid tube, for example, a screen-grid tube which is required in many clipping systems. It also assures a clean base line in the clipped synchronizing signal, and eliminates misfiring of associated synchronizing-signal apparatus by random high-frequency signals which might otherwise be coupled through by capacitive coupling at this point.

In the event a stabilized television signal is applied to the input circuit of the system, such as from the detector and A. V. C. source **15**, a fixed bias from a suitable source may be substituted for the stabilizing means comprising the condenser grid-leak arrangement **32**, **33**. The grid bias provided by this source would preferably be of sufficient magnitude to displace the video-frequency components of the applied signal beyond the cutoff level in tube **30**, as is well understood by those skilled in the art.

It will also be understood that the system is operative even though unstabilized signals are applied to the first tube **30** and the first tube is operated with a fixed bias on its control electrode. Under these conditions the first tube acts as an amplifier for the unstabilized signal and translates it into the second tube **35** where it is stabilized and clipped substantially as described.

While applicant does not wish to be limited to any particular circuit values for the embodiment of the invention described, the following set of representative values may be utilized in the circuit comprising the instant invention:

Tubes **30** and **35**---- Type 12SL7GT double triode	
Voltage supply +B----------volts--	250
Condensers **32** and **37**, each--microfarad--	0.1
Condenser **41** ----------do----	0.01
Resistors **33**, **36** and **38**, each---megohms--	2
Resistor **39**----------ohms--	50,000

While the invention has been illustrated and described in connection with a television receiver for removing video-frequency components from a composite television signal, it will be manifest that it is suitable for clipping one side of any stabilized or unstabilized signal having recurrent peaks.

While there has been described what is at present considered to be the preferred embodiment of this invention, it will be obvious to those skilled in the art that various changes and modifications may be made therein without departing from the invention, and it is, therefore, aimed in the appended claims to cover all such changes and modifications as fall within the true spirit and scope of the invention.

What is claimed is:

1. A system for asymmetrically clipping an applied signal having recurrent peaks comprising, a first vacuum tube having input electrodes and output electrodes including an anode, means for applying said signal to said input electrodes with such polarity that said peaks are effective to increase the conductance of said tube, an anode load impedance coupled to said anode, means for causing said peaks of said applied signal to be stabilized in the input circuit of said first vacuum tube, the amplitude of said applied signal being so related to the operating characteristics of said first tube that anode current clipping is effected therein, a second vacuum tube having input and output electrodes, means effectively comprising only passive coupling elements coupling said load impedance to said input electrodes of said second tube for applying thereto a signal translated by said first tube with such polarity that said peaks are effective to increase the conductance of said second tube, means for causing said peaks to be stabilized in said input circuit of said second tube, the amplitude of the signal applied to said second tube being so related to its characteristic that anode current clipping is effected in said second tube, and means coupled to said output electrodes of said second tube for deriving a clipped output signal.

2. A system for asymmetrically clipping an applied signal having recurrent peaks comprising, a first vacuum tube having input electrodes and output electrodes including an anode, means for applying said signal to said input electrodes with such polarity that said peaks are effective to in-

crease the conductance of said tube, an anode load impedance coupled to said anode, a second vacuum tube having input and output electrodes including an anode, cathode, and a control electrode, means including a conductive connection between said anode of said first tube and said cathode and effectively comprising only passive coupling elements coupling said load impedance to said input electrodes of said second tube for applying thereto a signal translated by said first tube with such polarity that said peaks are effective to increase the conductance of said second tube, means for causing said peaks to be stabilized in said input circuit of said second tube and for effectively grounding said control electrode of said second tube for signals of the frequency of said recurrent peak portions of said applied signal, the amplitude of the signal applied to said second tube being so related to its characteristic that anode current clipping is effected in said second tube, and means coupled to said output electrodes of said second tube for deriving a clipped output signal.

3. A system for asymmetrically clipping an applied signal having recurrent peaks comprising, a first vacuum tube having input electrodes and output electrodes including an anode, means for applying said signal to said input electrodes with such polarity that said peaks are effective to increase the conductance of said tube, an anode load impedance coupled to said anode, means for causing said peaks of said applied signal to be stabilized in the input circuit of said first vacuum tube, the amplitude of said applied signal being so related to the operating characteristics of said first tube that anode current clipping is effected therein, a second vacuum tube having input electrodes and output electrodes comprising a cathode and an anode, a load impedance for said second tube, said last-named impedance and the anode-cathode path of said second tube being effectively connected in series across said first-named impedance, means effectively comprising only passive coupling elements coupling said output electrodes of said first tube to said input electrodes of said second tube for applying thereto a signal translated by said first tube with such polarity that said peaks are effective to increase the conductance of said second tube, means for causing said peaks to be stabilized in said input circuit of said second tube, the amplitude of the signal applied to said second tube being so related to its characteristic that anode current clipping is effected in said second tube, and means coupled to said output electrodes of said second tube for deriving a clipped output signal.

4. A system for asymmetrically clipping an applied signal having recurrent peaks comprising, a first vacuum tube having input electrodes and output electrodes including an anode, means for applying said signal to said input electrodes with such polarity that said peaks are effective to increase the conductance of said tube, an anode load impedance of predetermined magnitude coupled to said anode, a second vacuum tube having input electrodes and output electrodes comprising a cathode and an anode, a load impedance for said second tube, the sum of said last-named load impedance and the minimum anode-cathode impedance of said second tube having a magnitude which is small with reference to that of said first-named impedance, said load impedance of said second tube and said anode-cathode impedance being connected across said first-named impedance, means effectively comprising only passive coupling elements coupling said output electrodes of said first tube to said input electrodes of said second tube for applying thereto a signal translated by said first tube with such polarity that said peaks are effective to increase the conductance of said second tube, means for causing said peaks to be stabilized in said input circuit of said second tube, the amplitude of the signal applied to said second tube being so related to its characteristic that anode current clipping is effected in said second tube, and means coupled to said output electrodes of said second tube for deriving a clipped output signal.

5. A system for asymmetrically clipping an applied signal having recurrent peaks comprising, a first vacuum tube having input and output electrodes, means for applying said signal to said input electrodes with such polarity that said peaks are effective to increase the conductance of said tube, a second vacuum tube having an input electrode and output electrodes including a cathode and an anode, means comprising said last-mentioned input electrode for reducing capacitive coupling between said cathode and said anode of signal components translated by said first tube, means effectively comprising only passive coupling elements coupling said output electrodes of said first tube to the input circuit of said second tube for applying thereto a signal translated by said first tube with such polarity that said peaks are effective to increase the conductance of said second tube, means for causing said peaks to be stabilized in said input circuit of said second tube, the amplitude of the signal applied to said second tube being so related to its characteristic that anode current clipping is effected in said second tube, and means coupled to said output electrodes of said second tube for deriving a clipped output signal.

6. A system for asymmetrically clipping an applied signal having recurrent peaks comprising, a first vacuum tube having input and output electrodes, means for applying said signal to said input electrodes with such polarity that said peaks are effective to increase the conductance of said tube, a triode second vacuum tube having an input electrode and output electrodes including a cathode and anode, means effectively comprising only passive coupling elements coupling said output electrodes of said first tube to the input circuit of said second tube for applying thereto a signal translated by said first tube with such polarity that said peaks are effective to increase the conductance of said tube, means for causing said peaks to be stabilized in said input circuit of said second tube and for effectively grounding the control electrode thereof for alternating currents, the amplitude of the signal applied to said second tube being so related to its characteristic that the anode current clipping is effected in said second tube, and means coupled to said output electrodes of said second tube for deriving a clipped output signal.

JOHN A. RADO.