(12) UK Patent Application (19) GB (11) 2 138 652 A

(43) Application published 24 Oct 1984

(21) Application No 8311091

(22) Date of filing 23 Apr 1983

(51) INT CL³
H04Q 11/02

(52) Domestic classification
H4K YR

(56) Documents cited
GB A 2113953
GB A 2103054
GB 1598917
GB 1511499
GB 1452154
GB 1382133
EP A 0048861
EP A 0048854

(58) Field of search
H4K

(71) Applicant
Standard Telephones and Cables Public Limited Company, (United Kingdom),
190 The Strand, London, WC2R 1DU

(72) Inventors
Thomas Robert Meek,
Michael David Ransom
Martin Joseph Roantree,

(74) Agent and/or address for service
S. R. Capsey, STC Patent Department, Edinburgh Way, Harlow, Essex, CM20 2SH

(54) Distributed PABX

(57) A distributed telephone exchange has a number of nodal stations (1, 2, 3, . . ., 10) each serving a sub-area of the area served by the exchange. Associated with each nodal station there is a number of cordless sub-stations. Communication between cordless sub-stations and nodal stations uses radio (or possibly infra-red) links, where communication between nodal stations is via a coaxial (or optical fibre) cable which interconnects the nodal stations. The cordless stations and nodal stations use low-power transmitters, and the localizations of their signals is assisted by attenuation in buildings' walls, etc.

The exchange uses TDM (or possibly TDM/FDM), and it has a control circuit (CON), which may be combined with one of the nodal stations. This control circuit allots time slots in the cycle to the various nodal stations, and if one nodal is overloaded, it allots time slots to it from other stations.

There is also an interface to a public telephone system.

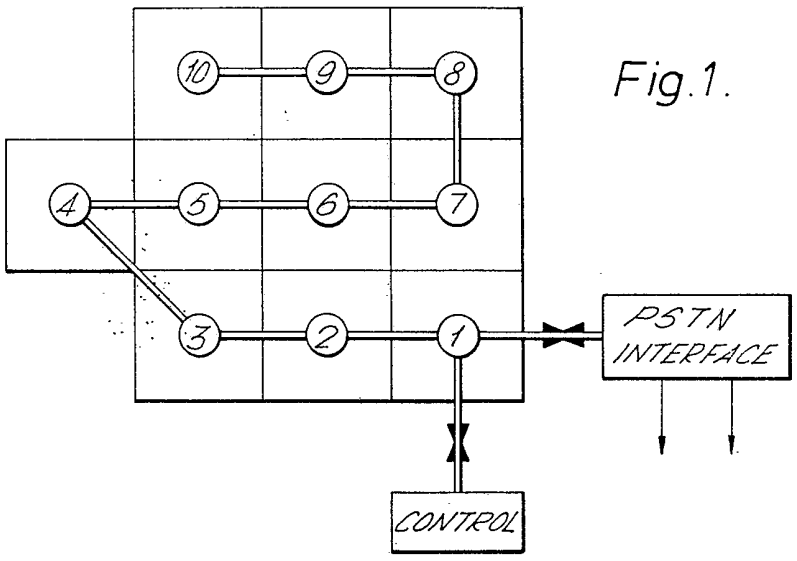

Fig.1.

GB 2 138 652 A

The drawings originally filed were informal and the print here reproduced is taken from a later filed formal copy.

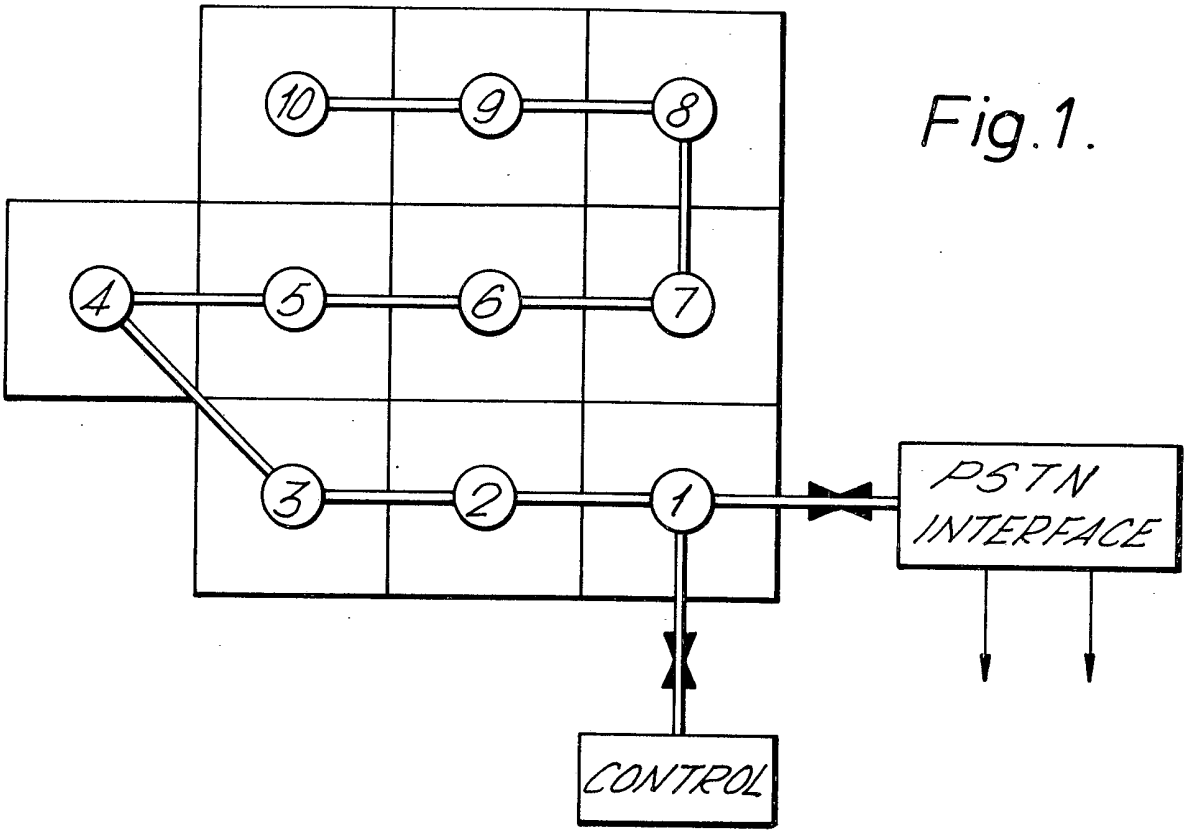
10
9
8
4
5
6
7
3
2
1
PSTN
INTERFACE
CONTROL

Fig.1.

Fig.2.

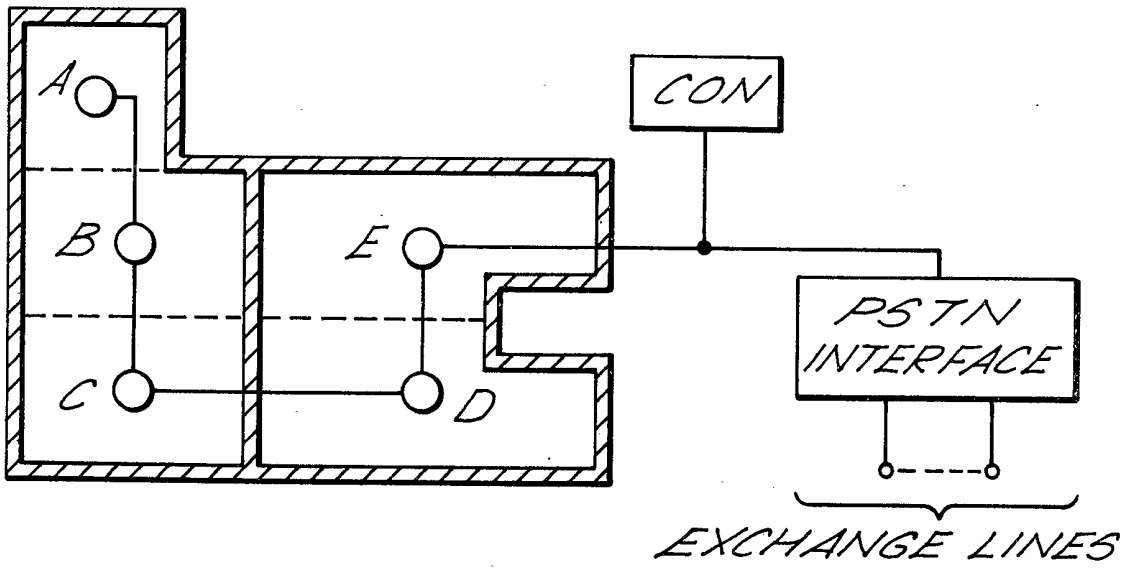
A
B
C
E
D
CON
PSTN
INTERFACE
EXCHANGE LINES

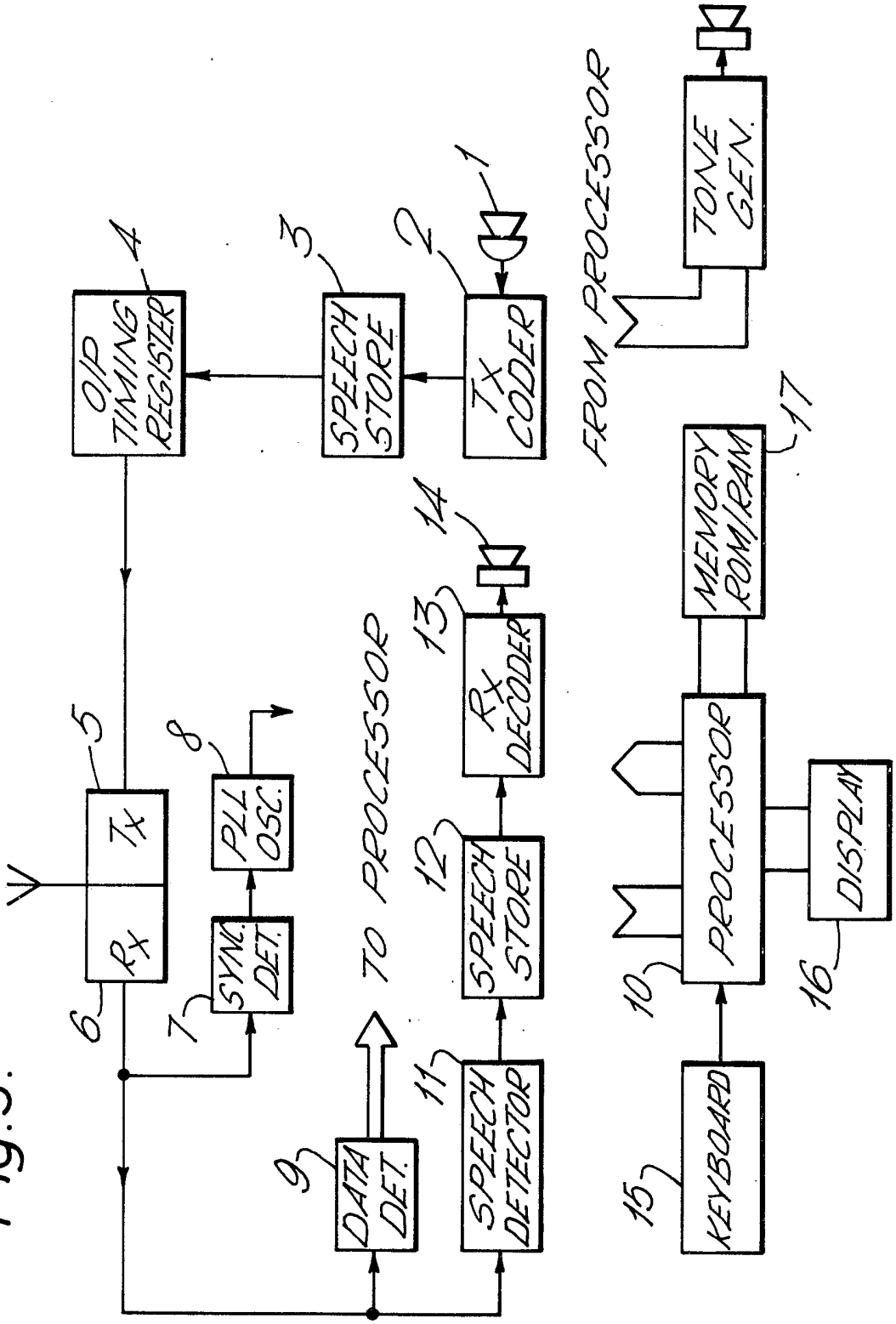
O/P TIMING REGISTER
4
SPEECH STORE
3
TX CODER
2
1
FROM PROCESSOR
TONE GEN.
MEMORY ROM/RAM
17
PROCESSOR
10
DISPLAY
16
KEYBOARD
15
TX
RX
5
6
PLL OSC.
8
SYN. DET.
7
DATA DET.
9
SPEECH DETECTOR
11
SPEECH STORE
12
RX DECODER
13
14
TO PROCESSOR

Fig. 3.

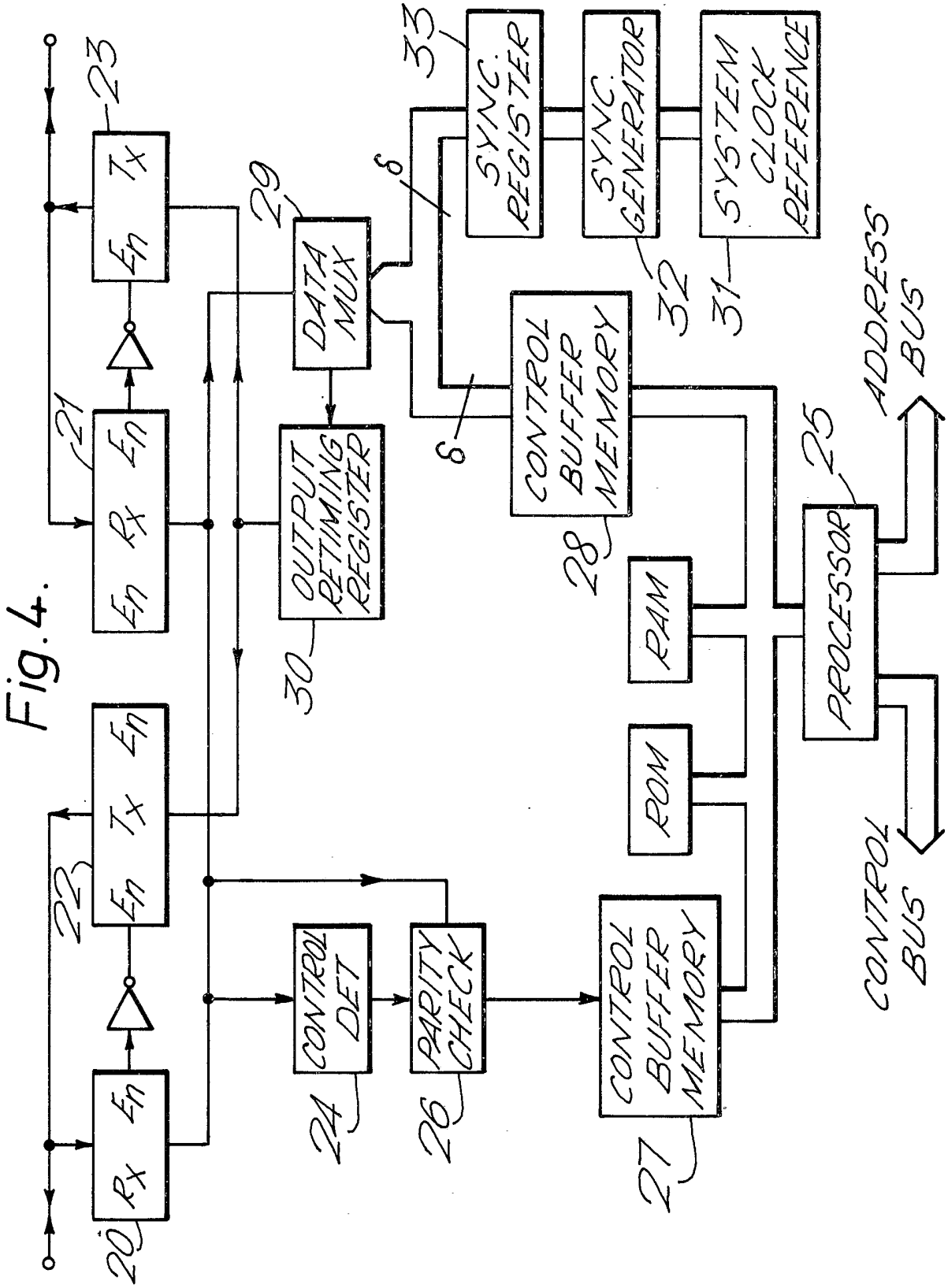
20
Rx
En
22
Tx
En
En
21
Rx
En
En
23
Tx
En
24
CONTROL DET
26
PARITY CHECK
27
CONTROL BUFFER MEMORY
28
CONTROL BUFFER MEMORY
29
DATA MUX
30
OUTPUT RETIMING REGISTER
33
SYNC. REGISTER
32
SYNC. GENERATOR
31
SYSTEM CLOCK REFERENCE
RAM
ROM
25
PROCESSOR
ADDRESS BUS
CONTROL BUS
8
8

Fig. 4.

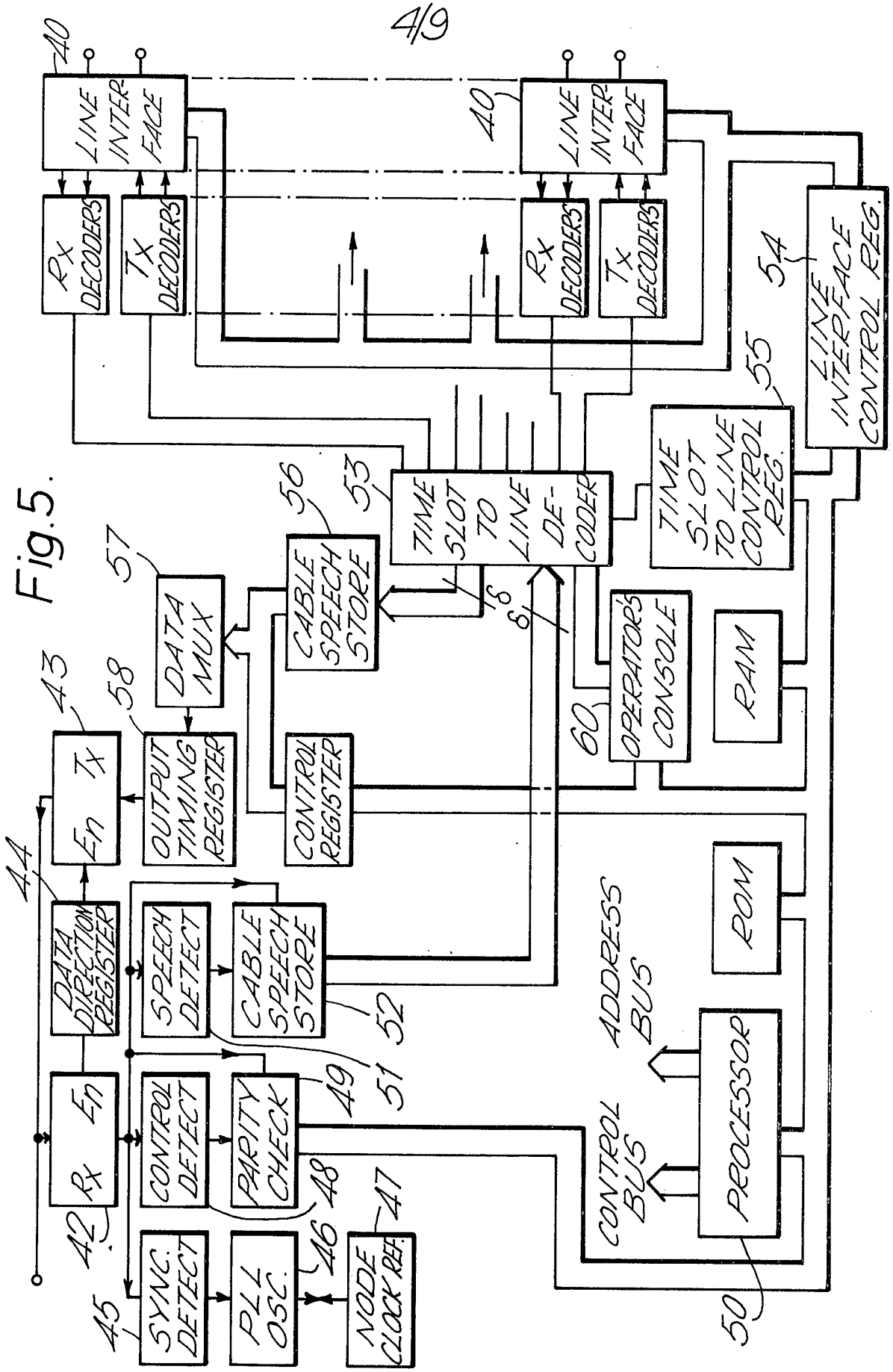
40
LINE INTERFACE
RX DECODERS
TX DECODERS
40
LINE INTERFACE
RX DECODERS
TX DECODERS
54
LINE INTERFACE CONTROL REG.
55
TIME SLOT TO LINE CONTROL REG.
53
TIME SLOT TO LINE DE-CODER
56
CABLE SPEECH STORE
57
DATA MUX
58
OUTPUT TIMING REGISTER
43
Tx En
44
DATA DIRECTION REGISTER
CONTROL REGISTER
18
8
60
OPERATOR'S CONSOLE
RAM
ROM
ADDRESS BUS
CONTROL BUS
PROCESSOR
50
SPEECH DETECT
CABLE SPEECH STORE
52
51
49
Rx En
42
CONTROL DETECT
PARITY CHECK
48
47
SYNC. DETECT
45
PLL OSC.
46
NODE CLOCK REF.

Fig. 5.

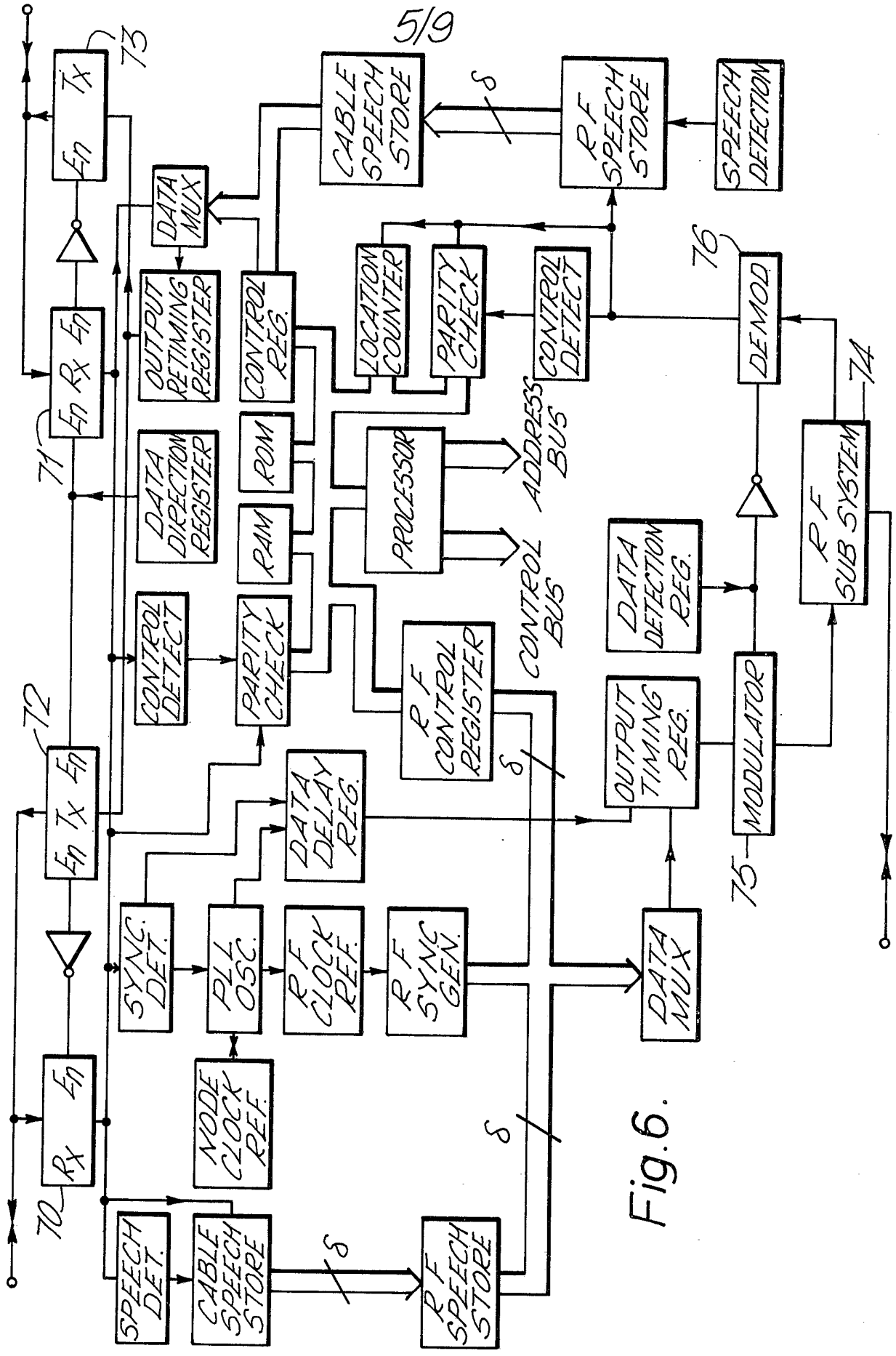

CABLE SPEECH STORE
RF SPEECH STORE
SPEECH DETECTION
DATA MUX
OUTPUT RETIMING REGISTER
CONTROL REG.
LOCATION COUNTER
PARITY CHECK
CONTROL DETECT
DEMOD
DATA DIRECTION REGISTER
ROM
RAM
PROCESSOR
ADDRESS BUS
CONTROL BUS
RF SUB SYSTEM
DATA DETECTION REG.
CONTROL DETECT
PARITY CHECK
RF CONTROL REGISTER
OUTPUT TIMING REG.
MODULATOR
DATA DELAY REG.
SYNC. DET.
PLL OSC.
RF CLOCK REF.
RF SYNC GEN.
DATA MUX
NODE CLOCK REF.
SPEECH DET.
CABLE SPEECH STORE
RF SPEECH STORE
70
71
72
73
74
75
76

Fig.6.

Fig. 7.

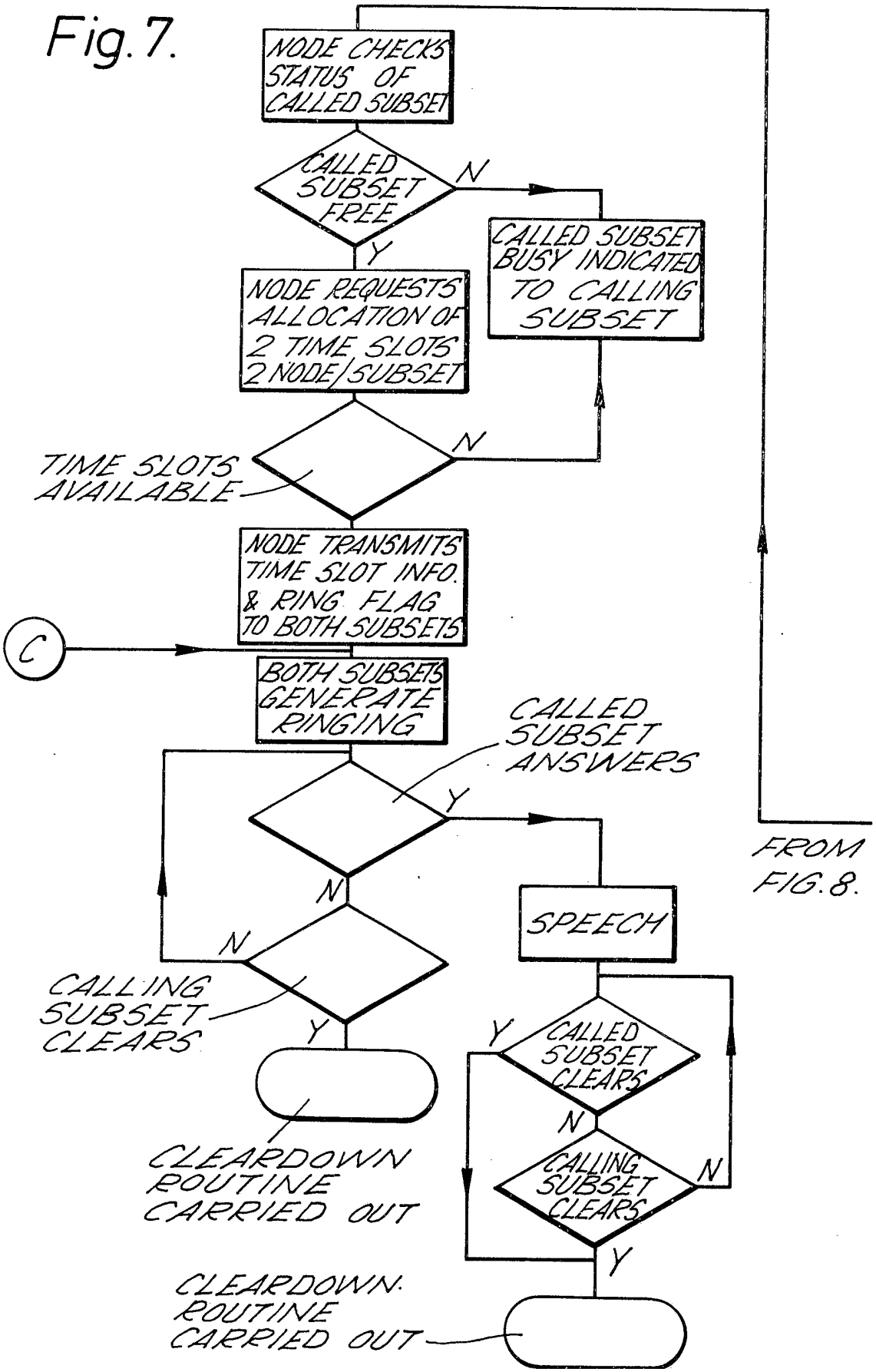
NODE CHECKS STATUS OF CALLED SUBSET
CALLED SUBSET FREE
N
Y
CALLED SUBSET BUSY INDICATED TO CALLING SUBSET
NODE REQUESTS ALLOCATION OF 2 TIME SLOTS 2 NODE/SUBSET
N
TIME SLOTS AVAILABLE
NODE TRANSMITS TIME SLOT INFO. & RING FLAG TO BOTH SUBSETS
C
BOTH SUBSETS GENERATE RINGING
CALLED SUBSET ANSWERS
Y
FROM FIG. 8.
N
SPEECH
N
CALLING SUBSET CLEARS
Y
Y
CALLED SUBSET CLEARS
N
CALLING SUBSET CLEARS
N
Y
CLEARDOWN ROUTINE CARRIED OUT
CLEARDOWN ROUTINE CARRIED OUT

Fig. 8.

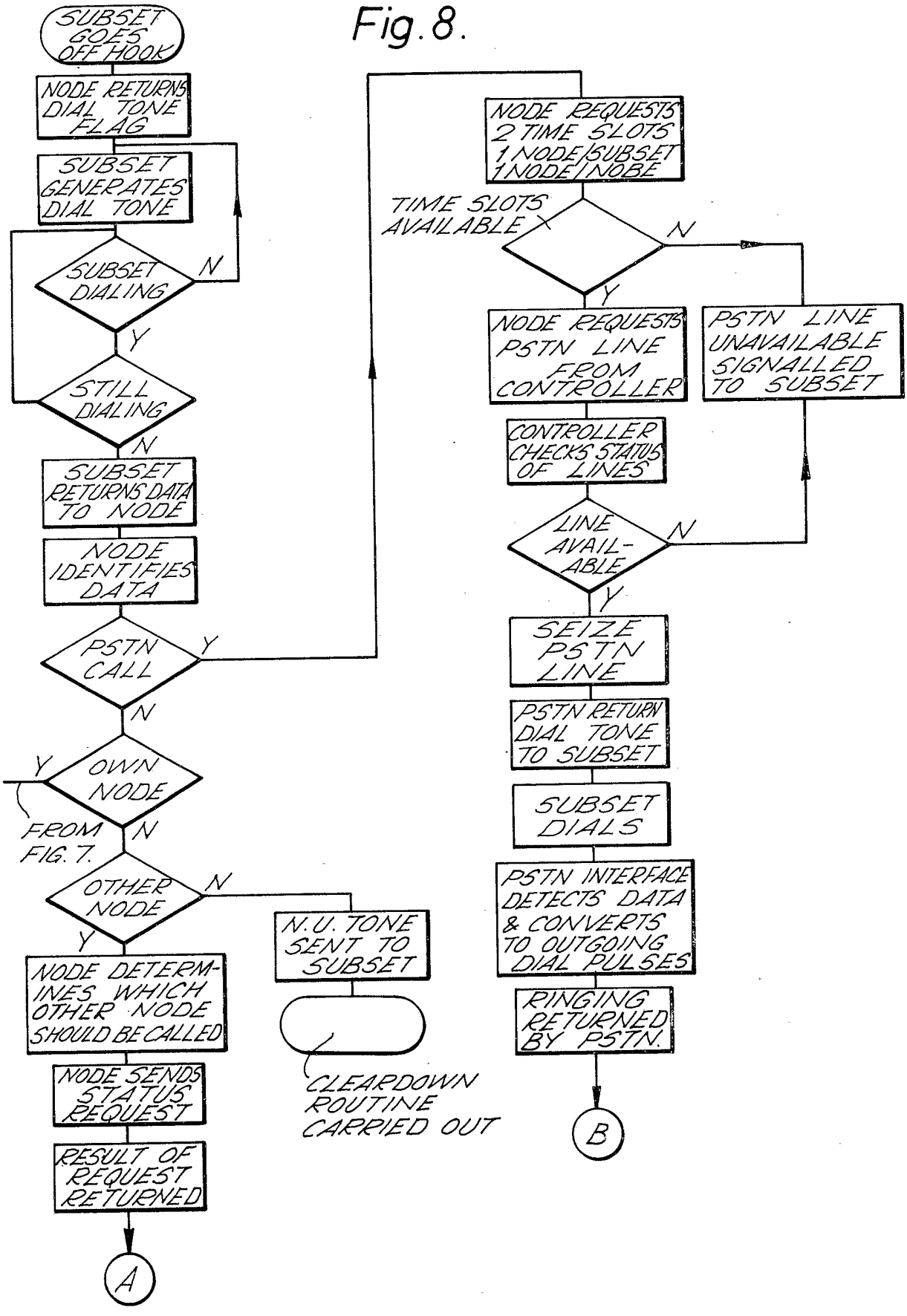
SUBSET GOES OFF HOOK
NODE RETURNS DIAL TONE FLAG
SUBSET GENERATES DIAL TONE
SUBSET DIALING
N
Y
STILL DIALING
N
SUBSET RETURNS DATA TO NODE
NODE IDENTIFIES DATA
PSTN CALL
Y
N
Y
OWN NODE
FROM FIG. 7.
N
OTHER NODE
N
Y
NODE DETERMINES WHICH OTHER NODE SHOULD BE CALLED
NODE SENDS STATUS REQUEST
RESULT OF REQUEST RETURNED
A
N.U. TONE SENT TO SUBSET
CLEARDOWN ROUTINE CARRIED OUT
NODE REQUESTS 2 TIME SLOTS 1 NODE/SUBSET 1 NODE/NOBE
TIME SLOTS AVAILABLE
N
Y
NODE REQUESTS PSTN LINE FROM CONTROLLER
PSTN LINE UNAVAILABLE SIGNALLED TO SUBSET
CONTROLLER CHECKS STATUS OF LINES
LINE AVAIL-ABLE
N
Y
SEIZE PSTN LINE
PSTN RETURN DIAL TONE TO SUBSET
SUBSET DIALS
PSTN INTERFACE DETECTS DATA & CONVERTS TO OUTGOING DIAL PULSES
RINGING RETURNED BY PSTN.
B

Fig.9.

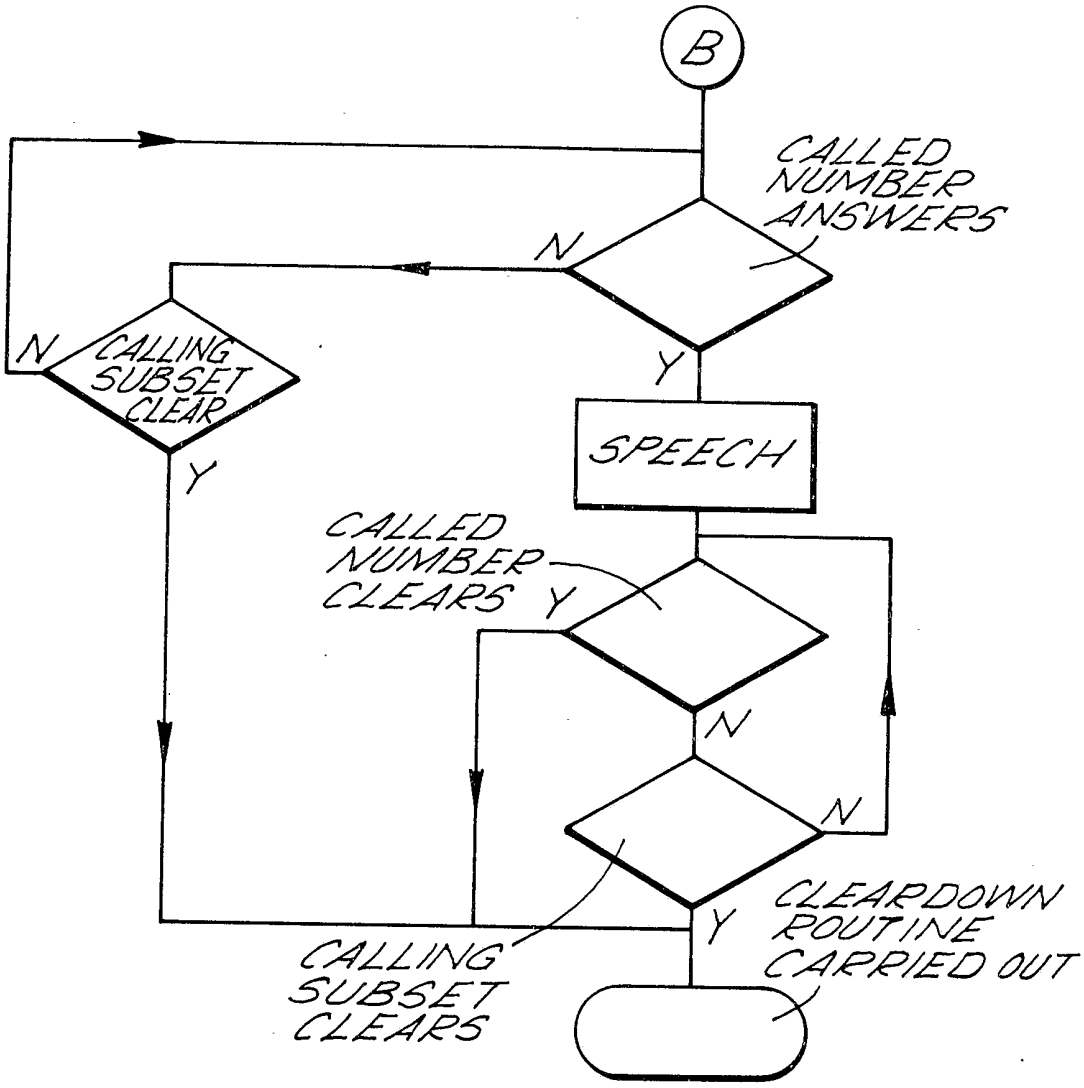
B
CALLED NUMBER ANSWERS
N
Y
N
CALLING SUBSET CLEAR
Y
SPEECH
CALLED NUMBER CLEARS
Y
N
N
Y
CLEARDOWN ROUTINE CARRIED OUT
CALLING SUBSET CLEARS

Fig.10.

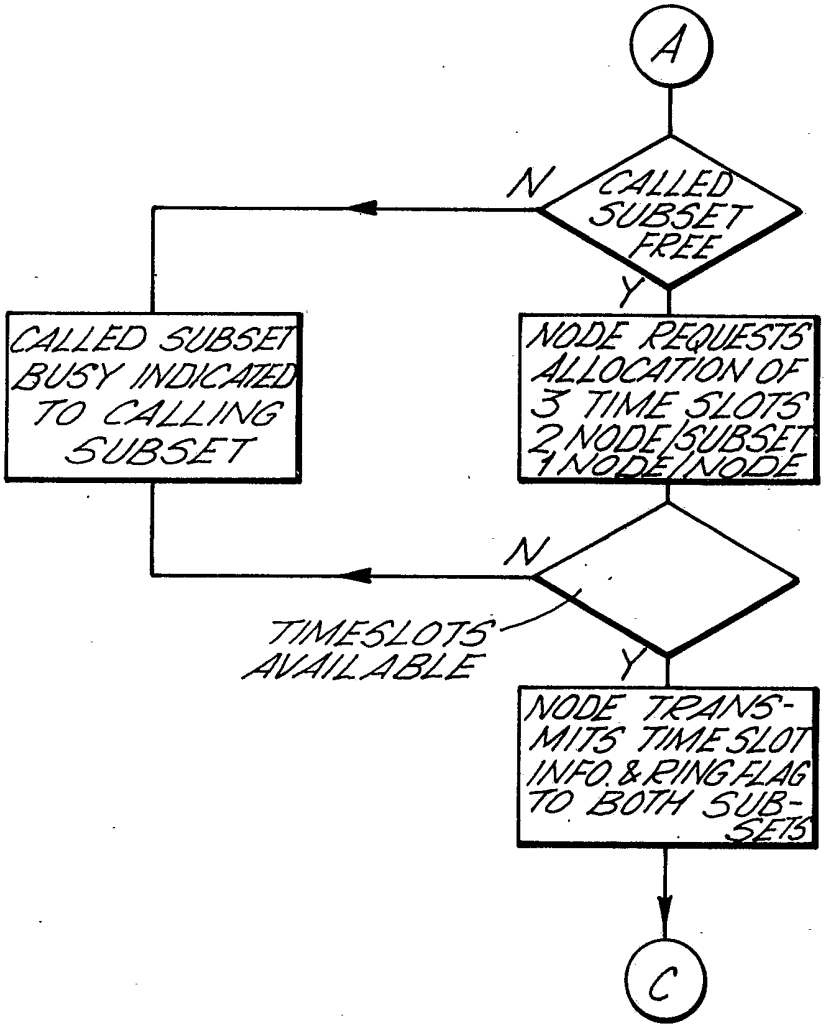
A
CALLED SUBSET FREE
N
Y
CALLED SUBSET BUSY INDICATED TO CALLING SUBSET
NODE REQUESTS ALLOCATION OF 3 TIME SLOTS 2 NODE/SUBSET 1 NODE/NODE
N
TIMESLOTS AVAILABLE
Y
NODE TRANSMITS TIMESLOT INFO. & RING FLAG TO BOTH SUBSETS
C

Fig.11.

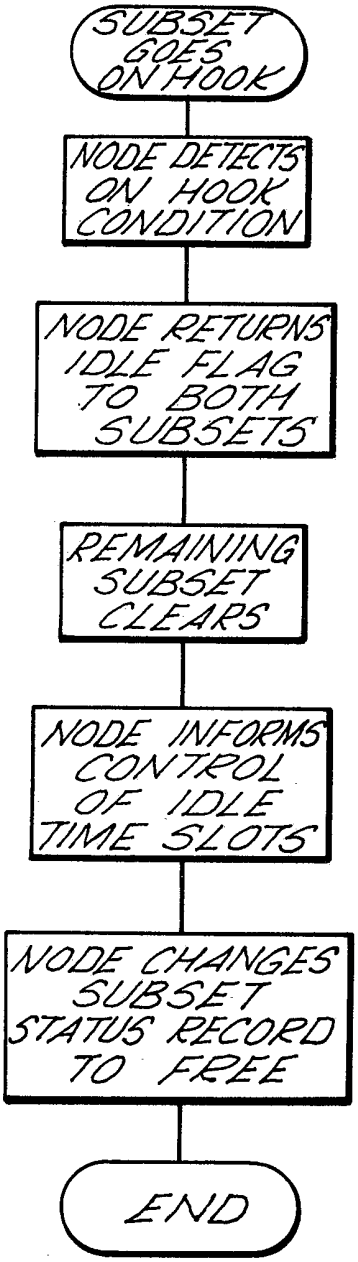
SUBSET GOES ON HOOK
NODE DETECTS ON HOOK CONDITION
NODE RETURNS IDLE FLAG TO BOTH SUBSETS
REMAINING SUBSET CLEARS
NODE INFORMS CONTROL OF IDLE TIME SLOTS
NODE CHANGES SUBSET STATUS RECORD TO FREE
END

SPECIFICATION

Distributed PABX

This invention relates to an automatic telecommunication exchange system, especially suitable for use in the business systems environment.

According to the invention there is provided a distributed telecommunications exchange, which includes nodal stations distributed about an area to be served, each of which stations is one of the nodes of a cellular radio or infra-red system, a number of cordless substations associated with each of said nodal stations, communication connections being set up between the cordless substations and the nodal stations by radio or infra-red links, and data conveying cable means interconnecting the nodal stations such that communication connections between the nodal stations are set up via the cable means in time division multiplex or in frequency division multiplex manner.

According to the invention there is also provided a distributed telecommunications exchange, which includes nodal stations distributed about an area to be served, each of which stations is one of the nodes of a cellular-radio system, a number of cordless substations associated with each of said nodal stations, communication connections being set up between the cordless substations and the nodal stations by radio links, a data conveying cable which interconnects the nodal stations, communication connections being set up via the cable in time division multiplex (TDM) manner, each said nodal station being allowed the use of a number of the TDM channels, and a control station for the exchange which allots the TDM channels for use for communications connections to be set up between respective ones of the cordless substations, whether associated with the same or with different nodal stations, communications between the nodal stations being set via the cable.

Thus a system embodying the invention combines the features of a cordless telephone and a fully distributed control system. Although the invention will be described in its application to a system in which the cordless sub-stations are of the radio type, it is also applicable where the communications between cordless sets and the nodal stations uses infra-red or normal corded links. Such links may in some cases be preferred to radio links.

A system embodying the invention will now be described with reference to the accompanying drawings, in which:

Figure 1 is a highly schematic diagram representative of the essentials of a system embodying the invention.

Figure 2 shows how a system such as that of Figure 1 could be located in a business environment.

Figure 3 is a simplified block diagram of a cordless subset for use in a system such as that of Figures 1 and 2.

Figure 4 is a simplified block diagram of a controller for a system such a that of Figures 1 and 2.

Figure 5 is a simplified diagram of an interface between a system such as that of Figures 1 to 2 and the public switched telephone network.

Figure 6 is a simplified block diagram of one of the nodes of a system such as that of Figures 1 and 2.

Figures 7—11 are explanatory flow diagrams.

In the system shown in Figure 1, a number of nodal stations 1, 2,. . . . .10 is distributed about a site to be served, there being ten such stations 1 to 10 in one building. These stations are connected together by a cable such as a coaxial cable, twisted pair cable, or an optical fibre cable, which also extends to an interface to the public switched telephone network (PSTN). Also connected to the cable there is a controller CON which performs control functions additional to those performed by the nodal stations. Alternatively, the first node can be combined with the controller.

Each of the nodal stations serves a specified cell area, so that we have a so-called cellular system, and each such nodal station serves a number, e.g. 50, of cordless substations. As will be seen, the communications between the cordless sets and the nodal stations are low-power VHF, UHF, or microwave links, but they could if preferred use infra-red links. Each such cell of the system can handle a number of concurrently-existing calls, e.g. 50 calls between different nodes, or 25 calls between cordless sets of the same node, as in the present case. Time division multiplex (TDM) is used to set up the calls, and RF isolation is achieved by only allocating time slots to a node which will not interfere with its immediate neighbours. TDM has the merit that much of the system can be made using relatively cheap logic circuitry.

The TDM cycle is split up, as "seen" by each cell, with alternate receive (Rx) and transmit (Tx) periods with one Rx period and one Tx period allotted to each active subset with each Rx period providing 50 time slots usable for calls. The system uses a 2.4 Mb/s time slot rate, the choice being based on the assumption that each duplex Channel needs 40 Kb/s. The time slot allocation is, as will be seen later, controlled by the controller CON, Figure 1.

In the system of Figure 1 both node 2 and node 9 could be allocated the same time slot for a particular call, because the radio transmitters in the nodal stations and the cordless subsets are low power devices so that attenuation prevents interference. This is especially so when the system is relatively large. Thus it is visualised that such a system could have an area as much as 100,000 square metres, based on a 1Km length of cable. Such a system could serve about 400 subsets.

Where the cordless subset—nodal station links are infra-red the risk of interference is even less

than in the radio case. In such a case the nodal station's transmit and receive devices could be ceiling-mounted to give good area coverage. Note that a system could use some cordless set-nodal station links of the radio type and some of the infra-red type, and a conventional corded node could be used if appropriate.

Another possibility is that, especially in a very large system, the cable could be branched.

A typical installation is shown in Figure 2; here each node is approximately defined by the locus of a particular boundary field strength, which is typically 10—20dB higher than the receiver's sensitivity to ensure good reception at the cell boundaries. Thus the cells may not all be of the same size. The walls between the various cells naturally cause attenuation, which facilitates the isolation of the cell areas from each other.

Such a system can be easily expanded by adding extra cells, with the proviso that widely separated cells, with two or more intervening walls in most cases, would prevent mutual interference. In such cases where the same time slots are thus reused, some time slot switching may be needed in the nodal stations or in the controller. This would occur when a subset moved between nodes.

Each node in the system can support 50 time slots, a time slot here being defined as a full duplex link between a subset and a node. This assumes a data rate of 2.4 Mbs, and speech data rate of 24 Kbit/s. Time slots are allocated to the cells by the controller CON on a need only basis. A time slot thus allocated to a cell is then unavailable to the neighbouring (in the RF sense) cells. The adjacent cells are defined in terms of field strength, the appropriate levels of which are programmed into the controller. This enables a desired protection ratio to be maintained, and allows the system to be upgraded as new cells can be programmed into the controller as needed.

The controller CON locates each subset, using a polling procedure every few seconds, which means that one time slot is used as a location time slot. Such location can be done on a field strength basis, or propagation delay measurement. From the information thus obtained, the controller builds up a subset location map, which allows time slot allocation to be optimised. In addition, a servicing slot is reserved for subset station interrogation and servicing, e.g. at a rate of one per second. In some cases the same time slot may be usable for both the location and the interrogation/servicing functions. Note that a subset retains its own number wherever its user wanders in the system. Hence on detection of a cell crossover, the controller instructs the new cells node to communicate with the subset on its existing slot. If this is not possible, then another slot is allocated to the new node and subset.

We now refer to the block diagram of the cordless subset, Figure 3. Here the microphone 1 is connected to a Tx coder 2, which produces the digital version of the speech on sampling, using a low bit rate technique, such as pulse code modulation (PCM), controlled variable slope delta modulation (CVSD), etc. The speech samples thus generated pass via a speech store 3 to an output timing register 4 from which they are applied, suitably timed in accordance with the system clock, to the radio transmitter 5.

Incoming speech and other signals, including the interrogation and location signals referred to above, are received by the receiver 6 from which clock sync-signals are extracted by sync-detector 7. This controls a phase-locked loop oscillator 8, which provides the subset's clock. Data incoming to the subset is extracted by the data detector 9, which monitors the bit stream for data which it recognises by its characteristics, e.g. bit patterns in a PCM system. The data thus detected is applied to a microprocessor 10, which controls the subset. This responds to the location signals mentioned above by causing the transmitter to reply accordingly, as it does for the service/status data. Incoming call requests are also received in this way, and the processor 10 provides call functions, such as ringing.

Incoming speech passes via a speech detector 11, speech store 12 and Rx decoder 13 to an earpiece or loudspeaker 14.

Associated with the processor 10, there is a keyboard 15 to perform "dialling" functions and also data transmission, a display 16 for incoming data which may include calling line identification, and a memory 17 for the processor.

We now refer to Figure 4, which is a block diagram of the controller CON (Figures 1 and 2). This is connected at both of its "ends" to the cable, as seen by the receivers 20, 21 and transmitters 22, 23. The system includes a control detector 24 for incoming information usable for control purposes, which feeds a processor 25 via a parity check circuit 26 and a control buffer memory 27. The processor exerts its control via another control buffer memory 28, data multiplexer 29, and output retiming register 30. Many of the inter block busses are eight wire busses, as shown.

The system clock, to which the various nodes and subsets synchronise, comes from a reference source 31, which controls a sync generator 32 and sync register 33, connected as shown.

Note that speech or other communications going through, but not intended for, the controller passes therethrough via the communications shown between the receivers and transmitters.

Figure 5 shows a PSTN interface, which is the interface between the system and the "outside world". If the system is a "stand-alone" system, such an interface is not needed. This interface is connected at one side C to the inter-node cable and at the other side via line interfaces 40, 40 to lines to the PSTN. At the side C, there is a receiver 42 and transmitter 43 interconnected by a data direction register 44, which ensures that incoming and outgoing signals do not clash. The receiver 42 gives access to a clock circuit, which includes a sync detector circuit 45, phase locked

loop oscillator 46 and clock reference 47, so that the interface is synchronised to the system. There is also a control detector 48 and a parity check circuit 49 via which incoming data reaches a processor 50.

Incoming speech is detected in a speech detector 51 from which it passes via a speech store 52 to a time slot-to-line decoder 53, from which it passes to the coder for the line interface chosen for the call. This is either the interface on which a call incoming to the system arrived or the interface selected by the processor for an outgoing call. These functions use a line interface control register 54 and a time slot-to-line control register 55. Speech from the line comes via the decoder 53 from which it passes via a cable speech store 56, data multiplexer 57 and output timing register 58 to the transmitter 43.

An operator's console 60 is provided for the functions normally associated with an operator's position, e.g. incoming call routing.

Figure 6 is a block diagram of one of the system nodes, which is connected to the cable via receivers 70, 71 and transmitters 72, 73, with interconnections to pass speech and data not intended for the node shown. Much of this is similar to but slightly more complex than the block diagrams described above, and so will not be described in detail.

Unlike some parts of the system the nodal circuit has a node equipment, the RF subsystem 74 connected to the rest of the node by the modulation and demodulation arrangements shown at 75, 76.

System operation can be understood from the flow diagram, of Figures 7, 8, 9 and 10, relate to distributed PABX (or PAX!) call set up, and Figure 11 is a generalised cleardown routine.

We now discuss briefly some of the protocols used in communications set up via the system, commencing with node-subset communications. The protocol used enables one node to synchronize, locate, interrogate and receive status indication from up to 400 subsets with a response time of between 1.3 and 2.6 seconds. Thus the maximum number of subsets assumed for the system can be dealt with, even if they all happen to occupy the area served by one node. The interrogate/status reports enable a typical PABX-subset "dialogue" to be set up, e.g. off hook, request call, cleardown, etc, and also enable time slot requests and allocations to be made. In this respect reference is directed to the flow sheets.

For normal call operation, each node supports up to 50 duplex lines, so that it can handle up to 25 "inter-node" calls or 50 calls inter-node, the PSTN interface being here regarded as a node, or combinations thereof. One node's effective area, assuming no obstructions, is 7,800 square metres, i.e. a radius of 50 metres.

All time slots are synchronised independently of the node transmitters, for which purpose it is necessary to lock all node transmitters to within about 100 ns. Thus each node needs a programmable delay, accurate to within 100 ns, equal to the propagation delay in the delay, which delay is produced by a high frequency clock (e.g. 29 MHz), and a counter in each node. There is also a guard band delay between each node—subset or subset-node transmission, defined as two bit periods. This consists of a bit period (500 ns) for transmitter turn on/off time and a bit period for return propagation delay time (350 ns) and circuit jitter time (150 ns). The transmitter turn on/off time of one bit period is chosen to reduce the amount of "splatter" in the RF spectrum.

A subset is located by measuring the return propagation delay time of its status word at each node, which measurement takes place during the gap between successive status words sent from that node. During a steady state, i.e. when the location of each subset is known, the "calling" node issues a command word to the subset to be located, which starts a counter in that node. This counter is then stopped when a status word is received from the "wanted" subset. The number of these counts is sent to the processor in the system controller, and this selects the one with the lowest count, and "tells" that subset to communicate with the appropriate node. The location map within each node is updated for each subset during this operation. This location procedure is repeated every 1.3 secs, and with a counter running at 14.4 MHz, this enables the location of each subset to be established to within about 20 metres.

There are three types of bit frame in use, the first of which is a *synchronising frame*, which consists of 54 bits of node identification and preamble and two guard bands. This frame is issued from each node sequentially (the frame is issued from node 10, 9, 8 . . . .1). This frame synchronises the clock edges of all subsets associated with that node to the node's own clock edge.

A control frame consists of 24 bits of control from the node to the subset, 24 bits of status from the subset to the node, and 8 bits of guard bands. This frame thus has in sequence the 24 control bits, a two-bit guard band, the stations' 24 bits etc., bits and a 6 bit guard band.

The speech frames each contain 50 full duplex speech slots, each containing 64 bits of speech data from subset to node, 64 bits of speech data from node to subset, and 4 bits of guard band.

We now consider inter-node communications protocol which handles inter-node speech and data traffic, and node traffic with the controller. The system is expandable in units of one node up to the maximum number of nodes permitted. It can also function as a stand-alone system, e.g. if the main inter-node cable is cut, in which case the system reconfigures itself such that full service is available to all nodes still connected to the first node and the controller.

To explain the operation it is assumed that the system has ten nodes with node 1 connected to the controller and the PSTN interface. At any time

data only flows in one direction in the cable, so data from the last node must reach node 1 before another transmission in the reverse direction can occur. In operation the complete data frame is thus in two portions, of which the first frame portion consists of data transfer between the nodes. This consists of data words each headed by a code for the node from which it is sent, followed by data words for each node, preceded by a header. The second frame portion consists of the speech blocks each labelled by a header identifying the node to which they are assigned. This is followed by the 50 speech blocks assignable to that node. Note that although the dataframe portion has error detection/correction, this is not needed for the speech blocks.

When node 9, the penultimate node, recovers the data word from node 10, it removes its own data to be received and adds to it its own data to be sent. When it detects the start of the speech frame it adds data to this in the time slots appropriate to the nodes with which it is communicating. This is then sent on down the cable to node 8. When node 9 during the processing reaches its own speech blocks these are stored internally and not sent on towards node 8. Thus as the frame passes along, each node extracts its own incoming data and adds its own outgoing data. When the frame reaches the last node node 19, a return data frame is sent back up the cable. This return frame has the same form as that already described but allows communication to take place between low and high numbered nodes e.g. node 7 can now communicate with nodes 8, 9, 10 etc.

In the system described herein the cable used is an electrical coaxial cable, but it could also be an optical fibre cable so as to exploit the high bandwidth characteristics of such cables, or alternatively a twisted pair cable.

Although the system described herein uses TDM on the cable, it will be appreciated that it would also be possible to use frequency division multiplex means.

CLAIMS

1. A distributed telecommunications exchange, which includes nodal stations distributed about an area to be served, each of which stations is one of the nodes of a cellular radio or infra-red system, a number of cordless substations associated with each of said nodal stations, communication connections being set up between the cordless substations and the nodal stations by radio or infra-red links, and data conveying cable means interconnecting the nodal stations such that communication connections between the nodal stations are set up via the cable means in time division multiplex or frequency division multiplex manner.

2. A distributed telecommunications exchange, which includes nodal stations distributed about an area to be served, each of which stations is one of the nodes of a cellular-radio system, a number of cordless substations associated with each of said nodal stations, communication connections being set up between the cordless substations and the nodal stations by radio links, a data conveying cable which interconnects the nodal stations, communication connections being set up via the cable in time division multiplex (TDM) manner, each said nodal station being allowed the use of a number of the TDM channels, and a control station for the exchange which allots the TDM channels for use for communications connections to be set up between respective ones of the cordless substations, whether associated with the same or with different nodal stations, communications between the nodal stations being set via the cable.

3. An exchange as claimed in claim 2 and in which one of the nodal stations also functions as the control station.

4. An exchange as claimed in claim 2 or 3, and in which the nodal stations are so located with respect to the walls in the area served by the exchange that the walls introduce attenuation into the signals so that the radio communication in respect of a said nodal station is in the main confined to the area surrounding that nodal station.

5. An exchange as claimed in claim 1, 2, 3 or 4, and in which an interface station is produced via which the cable has access to, and is accessable from, a plurality of lines to a public switched telephone network.

6. An exchange as claimed in claim 1, 2, 3, 4 or 5, and in which communication between the station served is effected on a full duplex basis.

7. An automatic telecommunications exchange, substantially as described with reference to the accompanying drawings.

Printed in the United Kingdom for Her Majesty's Stationery Office, Demand No. 8818935, 10/1984. Contractor's Code No. 6378.
Published by the Patent Office, 25 Southampton Buildings, London, WC2A 1AY, from which copies may be obtained.