T. E. ADAMS.

ROCK DRILL.

APPLICATION FILED JUNE 30, 1906.

914,215. Patented Mar. 2, 1909.

4 SHEETS—SHEET 1.

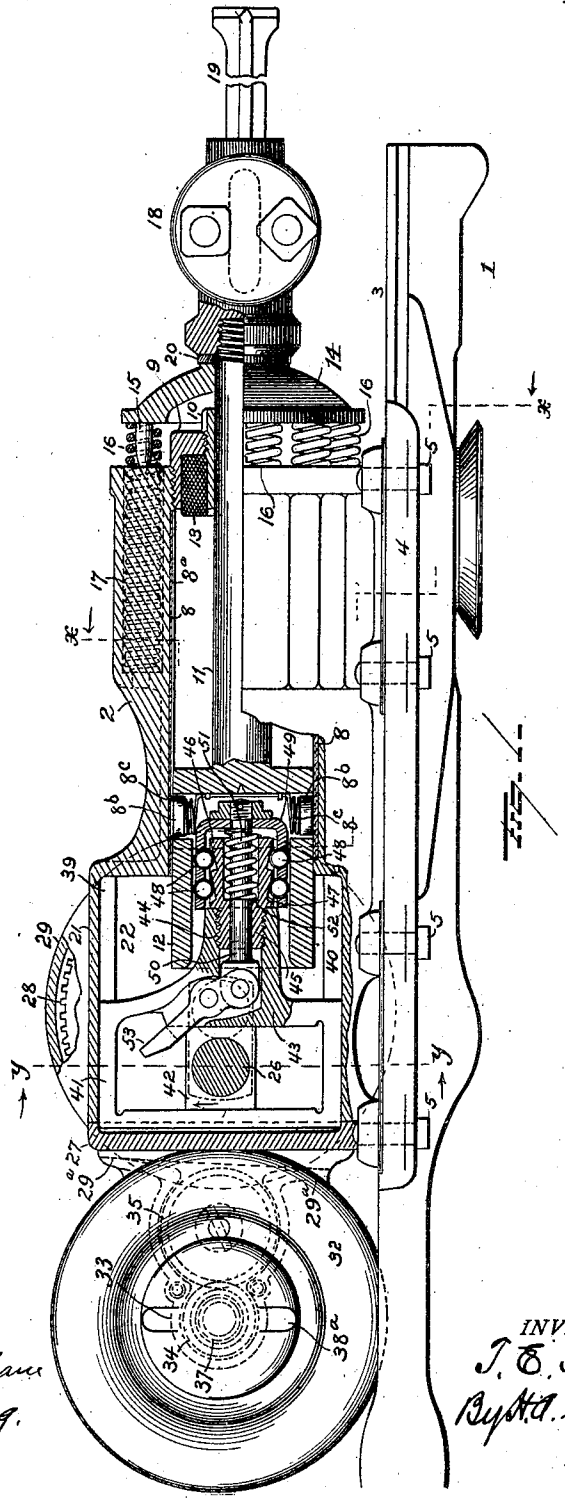

WITNESSES

E. J. Nottingham

G. F. Downing.

INVENTOR

T. E. Adams

By A. G. Seymour

Attorney

THE NORRIS PETERS CO., WASHINGTON, D. C.

T. E. ADAMS.

ROCK DRILL.

APPLICATION FILED JUNE 30, 1906.

914,215. Patented Mar. 2, 1909.

4 SHEETS—SHEET 2.

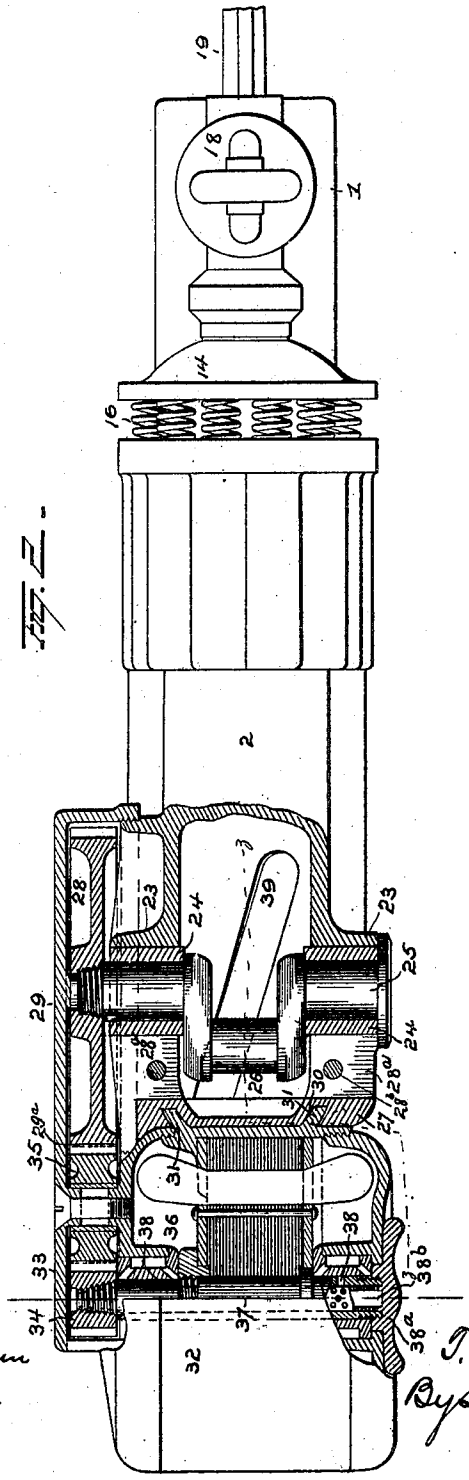

WITNESSES

E. D. Nottingham

G. F. Downing

INVENTOR

T. E. Adams

By H. A. Seymour

Attorney

THE NORRIS PETERS CO., WASHINGTON, D. C.

T. E. ADAMS.

ROCK DRILL.

APPLICATION FILED JUNE 30, 1906.

914,215. Patented Mar. 2, 1909

4 SHEETS—SHEET 3

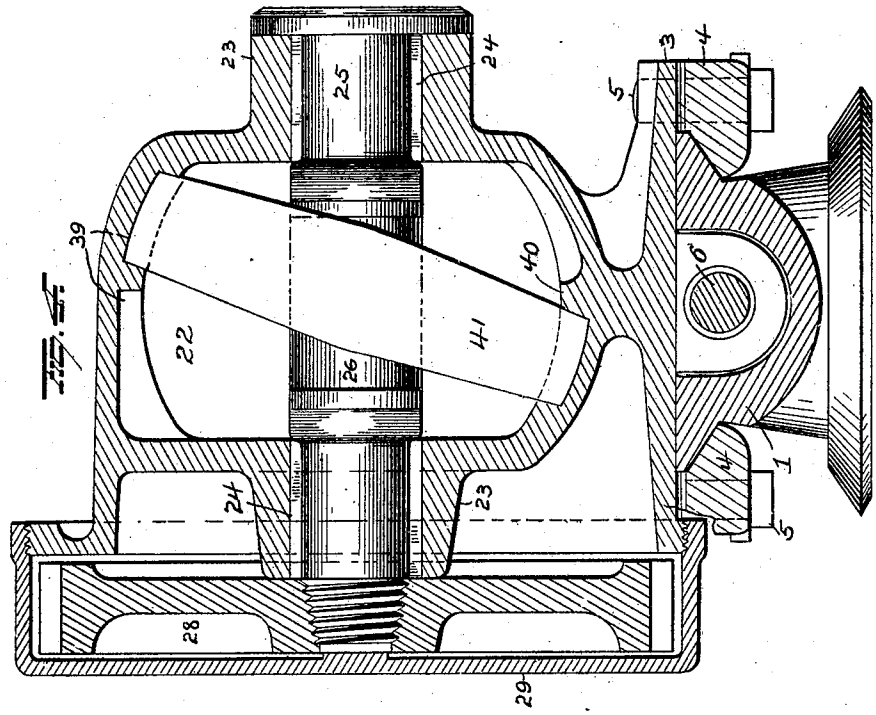

FIG. 3.

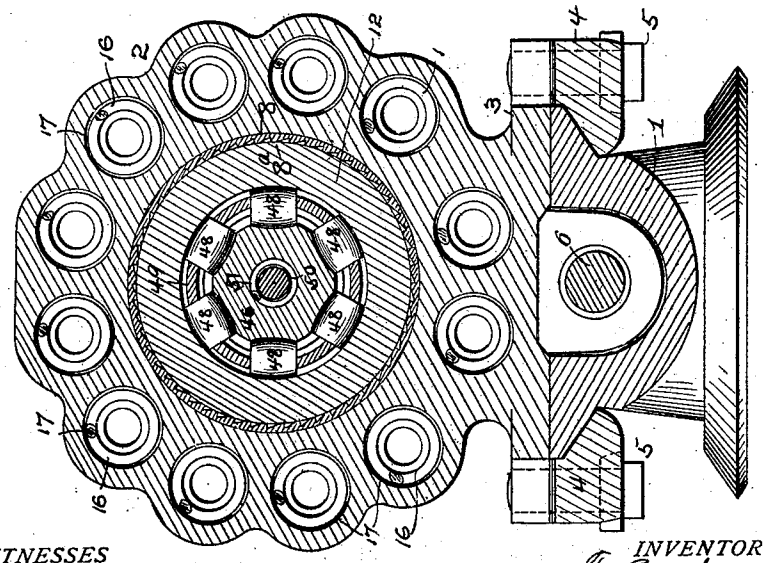

FIG. 7.

WITNESSES

E. J. Nottingham

G. F. Downing.

INVENTOR

T. E. Adams

By H. G. Seymour

Attorney

THE NORRIS PETERS CO., WASHINGTON, D. C.

T. E. ADAMS.

ROCK DRILL.

APPLICATION FILED JUNE 30, 1906.

914,215. Patented Mar. 2, 1909.

4 SHEETS—SHEET 4.

Fig. 5.

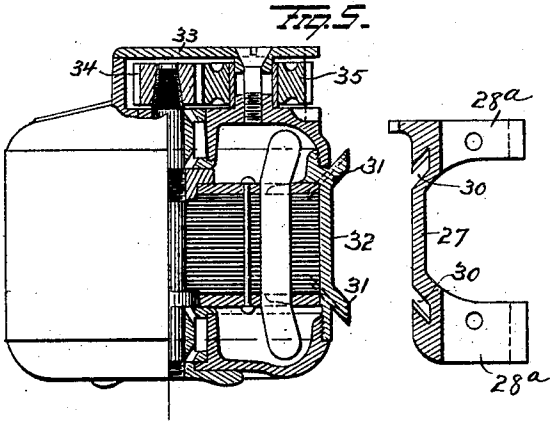

Fig. 6.

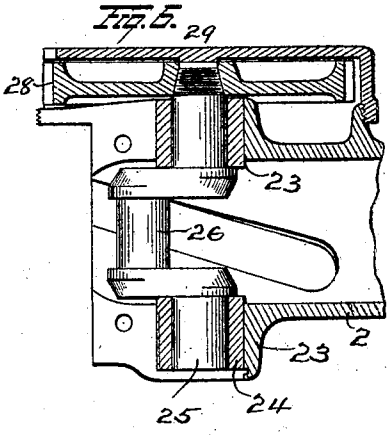

Fig. 7.

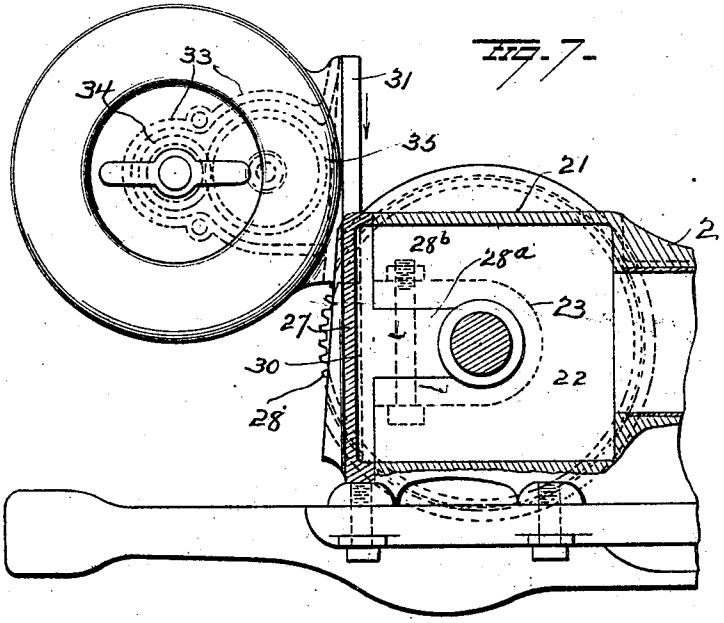

WITNESSES

E. J. Nottingham

G. F. Downing.

INVENTOR

T. E. Adams

By H. A. Seymour

Attorney

THE NORRIS PETERS CO., WASHINGTON, D. C.

UNITED STATES PATENT OFFICE.

THOMAS EDGAR ADAMS, OF CLEVELAND, OHIO.

ROCK-DRILL.

No. 914,215. Specification of Letters Patent. Patented March 2, 1909.

Application filed June 30, 1906. Serial No. 324,191.

To all whom it may concern:

Be it known that I, THOMAS E. ADAMS, of Cleveland, in the county of Cuyahoga and State of Ohio, have invented certain new and useful Improvements in Rock-Drills; and I do hereby declare the following to be a full, clear, and exact description of the invention, such as will enable others skilled in the art to which it appertains to make and use the same.

My invention relates to improvements in rock drills and more particularly to that class in which the forward thrust of the tool is effected by means of springs, one object of the invention being to so construct a drill that the force of the blow of the tool can be changed without changing the speed of the operating motor.

A further object is to so construct the drill that the stroke of the tool can be varied without liability of injury to the working parts, and to provide means whereby the drill rod carrying the tool, will be withdrawn by the operating mechanism against the resistance of the propelling springs, throughout same length of stroke but varying position of clutch grasp on the drill rod.

A further object is to construct the drill in such manner that its mechanism will operate without jar or shock to any of the parts.

A further object is to so construct the machine that the operation of the tool as well as the force of the blow struck by the tool, can be accurately controlled without stopping the motor or changing its speed.

A further object is to construct the machine in such manner that the operation of the tool can be controlled by simply feeding the same relatively to the rock upon which it is intended to operate.

A further object is to avoid, in a rock drill having a reciprocating and rotary drill rod, the provision of ratchet devices for effecting the rotary movement of said rod but providing a retaining ratchet to hold the rotation accomplished by the draw bar.

A further object is to construct a drill operating mechanism in such manner that the reciprocating and also the rotary movement of the drill rod will be effected by the operation of the driving head or draw bar.

A further object is to provide, in a rock drill, driving mechanism for the drill rod in which the reciprocating draw bar will operate to withdraw the drill rod and simultaneously turn the same.

A further object is to provide means for moving the drill rod longitudinally and rotating said drill rod step by step, continuously in the same direction.

A further object is to so construct the machine that the motor can start without load when desired.

A further object is to construct the machine in such manner that it can be started and operated without shock to the motor.

A further object is to so construct the machine that the tool can be made to strike a light blow at full speed.

A further object is to provide a rock drill having such construction that no harm can result to the mechanism when the machine is operated too far from the rock or too close thereto.

A further object is to minimize vibration and shock incident thereto, without resort to cushioning devices when desired.

A further object is to provide a rock drill which shall be short and compact in construction; which shall be easy to control; which shall be accurate in operation throughout a wide range of adjustment of a fixed length but varying force of the stroke.

With these and other objects in view, the invention consists in certain novel features of construction and combinations and arrangements of parts as hereinafter set forth and pointed out in the claims.

In the accompanying drawings; Figure 1 is a view partly in longitudinal section on the line z—z of Fig. 2 and partly in elevation, embodying my invention. Fig. 2 is a view partly in plan and partly in transverse section. Fig. 3 is a sectional view on the line x—x of Fig. 1. Fig. 4 is a sectional view on the line y—y of Fig. 1. Fig. 5 is a view partly in horizontal section showing the motor separated from the back door of the drill barrel. Fig. 6 is a horizontal section showing the rear portion of the drill barrel, with the back door removed and the crank shaft, gear 28 and gear case 29 in place, and Fig. 7 is a view partly in section showing the manner of placing the motor in position on the back door of the drill barrel.

1 represents a guide shell or support which may be attached in any well known manner to a column tripod or similar supporting frame. A drill barrel or body 2 is disposed over the guide shell and provided with a base 3 movable longitudinally thereon. The drill barrel is retained and guided on the guide

shell by means of beveled bars 4 secured to the base 3 of the drill barrel, by means of bolts 5, and projecting under the flaring side edges of the guide shell. A feed screw 6 for moving the drill barrel longitudinally, is suitably mounted in the guide shell and passes through an enlargement 7 depending from the drill barrel.

The barrel 2 is made with a cylindrical bore having a suitable grooved lining 8. In the forward end of the cylindrical bore of the barrel, a flanged collar 9 is screwed, and within this collar a bushing 10 is screwed and serves as a packing for the drill rod 11. A cylindrical head 12 is made at the inner end of the drill rod, and an elastic buffer 13 is secured between the collar 9 and bushing 10 at the forward end of the barrel, against which buffer, the cylindrical head on the drill rod may abut. The lining 8 of the barrel is made internally with longitudinal grooves which form elongated ribs or teeth 8^a, said ribs or teeth being flattened to offer wearing surfaces for the cylindrical head 12. Within said head, ratchet blocks 8^b are mounted and pressed outwardly through suitable holes in the head 12, by means of a spring 8^c and made to engage the teeth 8^a of lining 8, said blocks permitting rotation of the head 12 and drill rod in one direction but preventing retrograde rotation. The means for rotating the drill rod will be hereinafter fully explained. A plate or head 14 is mounted on the drill rod forwardly beyond the barrel 2 and is provided with a circular series of rearwardly projecting pins 15 to receive the forward ends of a series or battery of springs 16. The forward portion of the drill barrel is somewhat enlarged and provided with an annular series of pockets 17 for the reception of the spring 16. A chuck 18 of any preferred construction, is secured to the forward end of the drill rod for the reception of a suitable tool 19, and between the shank of the chuck and the plate or head 14, a loose washer 20 is disposed, and may be lubricated by grease creeping out on the drill rod. The drill rod, with its head 12, and chuck, can be removed from the barrel, and after having removed the ratchet blades 8^b above described, from the head 12, a drill steel may be passed through the holes previously occupied by said ratchet blocks, and used as a lever in unscrewing the chuck from the drill rod. The purpose of the springs 16 is to project the drill rod and force the drill tool against the rock with a cutting blow. The exact operation of the springs for the purpose stated and the importance of the construction and arrangement of parts shown in the drawings will be hereinafter more fully explained.

The rear portion of the drill barrel 2 is enlarged as at 21 to form a chamber 22, into which the cylindrical head 12 on the drill rod projects. Diametrically opposite walls of the chamber 22 are made with slotted enlargements 23 for the reception of bearing boxes 24, in which a crank shaft 25 is mounted, the crank arm 26 of said shaft being disposed centrally within the chamber 22. The rear end of the chambered enlargement 21 of the barrel or body 2 is closed by means of a removable plate or back door 27 having lugs 28^a which project into the slotted enlargements 23 and abut against the bearing boxes 24. Bolts 28^b pass through the enlargements 23 and lugs 28^a to secure the back door in place. One end of the shaft 25 projects beyond its bearing and carries a gear wheel 28, inclosed by a gear casing 29. The rear face of the plate or back door 27 is made with dove tail guides 30 for the reception of similarly shaped flanges 31 on a motor casing 32, the latter being thus removably attached directly to the drill body. The motor casing is provided with a gear casing 33 which serves to house gears 34—35, the former being secured to the motor shaft and the latter being mounted between the walls of the motor casing 32 and gear casing 33. The gear 35 receives motion from the gear 34 and imparts motion to the large gear 28 on the crank shaft 25. The joint between the gear casing 33 on the motor casing and the gear casing 29 on the drill body, is made angular as indicated by the line 29^a, Fig. 1 to permit the gears to properly mesh as the motor casing slides down in its dove tail seat. The gear casing 32 is secured to the body of the drill casing or barrel, to insure a grease-tight joint.

I prefer to employ an electric motor 36 of the alternating-current type for reasons explained further on, and the armature shaft 37 of the motor is made hollow to carry lubricant from the gear casing, through ducts 38 to the bearings of the armature. The rotor of the motor may be provided with removable hand starting wheel 38^a. This removable hand wheel carries a perforated tube 38^b, preferably of sheet metal, which enters the hollow shaft of the motor. In order to apply lubricant to the motor, the hand wheel 38^a and tube 38^b are removed and the tube will be filled with lubricant, such as grease. Said hand wheel and tube will then be replaced. The tube having numerous perforations, will permit the lubricant to enter the motor shaft and pass to the wearing faces.

Diametrically opposite walls of the chamber 22 in the enlargement 21 of the drill barrel or body 2, are made with spiral grooves 39—40, within which the ends of a draw bar 41 move. The draw bar 41 is made with an elongated opening which receives a sliding box 42, mounted sufficiently loose on the crank arm 26 of shaft 27 to permit said draw bar to move in the spiral grooves 39—40, when the crank shaft is operated to recipro-

cate said draw bar. At a point centrally of the drill barrel, the draw bar is made with a forward projection 43, provided with a tubular portion 44 adapted to project into the cylindrical head 12 at the rear end of the drill rod. The shank 45 of a tubular clutch barrel 46 is screwed into the tubular portion 44 of the draw bar, and said clutch barrel is provided exteriorly with beveled faces 47, against which a number of rollers 48 have their bearings. These clutch rollers project through grooves in a cylindrical carrier 49 and engage the wall of the cylindrical head 12 on the drill rod, so that when the draw bar is moved rearwardly, the rollers 48 will be crowded between the beveled faces of the clutch barrel and the wall of the cylindrical head 12 and move the drill rod rearwardly. The carrier 49 is secured to a longitudinally movable rod 50 which passes through the tubular clutch barrel and enters the tubular portion 44 of the draw bar. A spring 51 encircles the rod 50 within the clutch barrel and bears at one end against a shoulder 52 in said barrel, the forward end of said spring bearing against the carrier 49,—the spring thus tending to press the carrier forwardly and insure the gripping action of the clutch when the draw bar moves rearwardly.

A trip lever 53 is pivoted between its ends in the forward projection 43 of the draw bar and the longer arm of this lever projects into the path of the box 42 on the crank 26 of shaft 25. The shorter arm of the trip lever is pivotally attached to the rod 50, so that when the longer arm of said trip lever is engaged by the box 42 during its movement in the direction indicated by the arrow in Fig. 1 and when the draw bar shall have been withdrawn, the rod 50 will be moved rearwardly against the resistance of the spring 51, and the carrier 49 will move the rollers 48 down the inclined faces 47 of the clutch barrel, and then relieve the wedging action of said rollers between the clutch barrel and the intertor face of the cylindrical head 12. The cylindrical head of the drill rod having been thus released, the drill rod will be projected forwardly by the action of the springs 16, to cause the tool carried by the drill rod, to strike the rock. As the crank arm of shaft 25 continues to rotate, the draw bar will be moved forwardly and cause the clutch devices to reach after the escaped drill-rod-head and during such forward movement of the draw-bar, the clutch device will enter the cylindrical head 12 of the drill rod, and when the crank arm passes the forward extremity of its throw and begins the last half of its revolution, the clutch will become active within the cylindrical head 12 and withdraw the drill rod against the resistance of the springs 16 and compress said springs to store their power for the next forward thrust of the drill rod. During this last half-revolution of the crank of shaft 25, when the drill rod is withdrawn through the medium of the clutch and the draw bar, the latter will be caused to be turned slightly by means of the spiral grooves through which the ends of the draw-bar must move, and the draw-bar being at this time clutched to the drill rod, the latter is turned slightly as it moves rearwardly away from the rock. It is apparent that during the forward movement of the draw-bar, it is caused (by the action of the spiral grooves) to turn in a direction reverse to that just described, but when the draw-bar is thus moving forwardly, the draw bar and drill rod are not coupled by the clutch and hence the drill rod will not be turned during its forward thrust. From the above, it follows that the drill rod is turned, always in the same direction. In other words, it is made to rotate, step by step, and will make a complete revolution after about twenty thrusts of the drill rod.

The advantage attained by the use of a crank rather than a cam in my improved drill is of importance. The "dwell" of the draw bar as the crank passes the back center has a peculiar advantage, in that the full pull backward is had, and yet the box on the crank pin has movement enough to operate the trip and lose none of the length of the stroke. The front "dwell" of the draw bar also allows time for the clutch to come to its bearing without jerk and the next stroke is started without shock.

When direct current electric motors are used for operating rock drills, the force of the blow to be struck by the tool is usually controlled by changing the speed of the motor. In alternating current practice, changing the speed of a motor is not satisfactory. I therefore so construct the drill that the regulation of the force of the blow struck by the tool is wholly independent of the speed of the motor, and I prefer to employ an alternating current motor as the matter of speed is not important and as I am enabled to avoid the necessity for rheostat controllers commutators and brushes and all moving wires such as are used with direct current motors. The importance of so constructing a rock drill that its tool can be made to strike light as well as heavy blows, is apparent when it is remembered that a sharp tool or steel should be made to strike the rock lightly for a short time so that it will become "set or seasoned", and also, that in passing seams, a hard blow is not always advisable; nor is it in starting a new hole. To make good progress in the work however, light blows should be as frequent as possible. With my improved construction, the force of the blow struck by the tool can be readily controlled by merely adjusting the drill barrel (by means of the feed screw) relatively to the rock. To stop the stroke, it is simply necessary to back the drill

away from the rock and the motor need not be stopped. The reason of this is that when the machine is so placed that its tool cannot reach the rock, the drill rod will move forwardly beyond the reach of the clutch and hence the latter cannot engage the cylindrical head on the drill rod. Therefore, the motor, crank shaft, draw bar and clutch barrel will continue to operate while the drill rod and the tool or steel carried thereby, will remain stationary. The machine may be thus operated when the holes in the rock clean readily. In rock where the holes clog badly, it is sometimes desirable, to have the reciprocation of the drill steel continue when backing out of holes. In such cases, a larger buffer spring may be put into the drill, and as the cylindrical head 12 can no longer escape the clutch, the blow continues, but the greater buffing capacity permits this without damage. A buffer having little resilience is preferable, such as rope fiber or rubber. By employing a large number of springs 16 having long range of action, the desirable range of force of blows can be easily had. By so placing the drill, that engagement of the tool will but slightly compress the springs 16, but pressing the drill rod back a sufficient distance to permit the clutch barrel to reach into the cylindrical head 12, the drill rod will be so operated as to cause the tool to make light strokes. By now feeding the drill barrel forwardly, faster than the hole being bored deepens, the springs 16 will become more compressed and will gradually increase the force with which they will project the drill rod, until the maximum force of which the springs are capable is reached. As the drill barrel is thus fed toward the rod and the force of the blow increased, the clutch barrel will enter farther into the cylindrical head of the drill rod, at each stroke, and the length of the stroke will therefore remain constant throughout the range of adjustment of the force of the blow of which the machine is capable, and throughout this range of adjustment, the clutch will always engage the drill rod to withdraw it, wherever it may find it. Thus the means for withdrawing the drill rod will adapt themselves to variation of the relative positon of the drill to the rock.

The drill barrel can be moved so close to the rock that the drill rod will be forced back far enough to prevent the full throw of the draw-bar. In such case, the entire mechanism, including the motor, will stop, but as soon at the drill barrel is moved back far enough to permit the crank shaft to make a complete revolution, the machine will immediately start (the source of electric current to the motor not having been disturbed though the motor stand stalled some minutes), and the drill will again begin to make strokes, the drill being at this time so disposed relatively to the rock, that the springs 16 will be exerting their maximum propelling force. The design of the motor is preferably such that when stalled for about five minutes, the temperature will not be dangerous to the insulation.

It has been hereinbefore pointed out that if no resistance is offered to the throw of the drill rod (such as the tool striking the rock), the cylindrical head of the drill rod will move out of reach of the clutch head. This fact becomes important when, during the operation of the drill, the tool meets a hole in the rock. In such case, the head 12 of the drill rod will strike the buffer at the forward end of the drill barrel, but it will strike said buffer but once, because the drill rod will stop promptly. Such a stroke of the drill rod, being abnormally long, will not have the full power of the springs, and hence the forward thrust of the drill rod, when it is not met by the resistance of the rock, will not result in harmful jar or other injury to the mechanism.

To lose a "shift" in drilling a tunnel entails greater loss than the cost of repairing a broken machine. In rock drills of the class to which my invention relates, it has been proposed to employ a single large spring for projecting the drill tool. Should this spring break, the cost of repairing the machine must be added to the loss incident to the stopping of the work and the possible consequent losing of the "shift". With my construction, wherein I employ a "gang" of small, tough springs; a broken one means but little loss in first cost; is immediately seen, and can be ignored. Should several springs of the gang break, the "shift" can be finished, as the broken parts will still do good work. This immunity from disaster cannot be had with a single, large spring. Even when softly tempered, such a spring is subjected to severe vibration when the tool strikes the rock, and is liable to crystallize and be broken and thus result in disabling the drill to such an extent that no further work can be done until the broken spring shall have been displaced by a new one. Furthermore the use of a gang of light, tough springs is more economical than the single large springs heretofore employed, and can be more easily and quickly replaced. By arranging the springs around the front end of the drill body, I am enabled to save in length of the machine and provide room for so much spring capacity that the springs do not constitute the weak feature of the drill as heretofore.

Having fully described my invention what I claim as new and desire to secure by Letters-Patent, is:—

1. In a drill, the combination with a reciprocating drill rod, of springs for propelling the same forwardly, a clutch device behind the drill rod and movable in the same plane as the drill rod, for withdrawing the latter

and compressing the springs, means for reciprocating the clutch device, and means for tripping the clutch device at the rear end of its stroke and detaching it from the drill rod.

2. In a drill, the combination with a reciprocating drill rod, of a gang of springs for propelling the same forwardly, a draw bar, means for reciprocating the draw bar behind and in the same plane as the drill rod, a clutch device connected with and reciprocated by said draw bar behind the drill rod for withdrawing the drill rod and compressing the gang of springs, and means for tripping the clutch at the rear end of its throw and detaching it from the draw bar.

3. In a drill, the combination with a drill barrel having an annular series of pockets in its forward portion, and a reciprocating drill rod located centrally in said barrel and projecting forwardly beyond the same, of a series of springs located in the annular series of pockets and projecting forwardly beyond the same for propelling the drill rod forwardly, and a plate or head on the drill rod beyond the barrel, to receive the force of said springs to propel the drill rod, means for withdrawing the drill rod to store the energy of the springs, and means for releasing the withdrawing means at the rear end of the throw of the latter, from the drill rod.

4. In a drill, the combination with a drill barrel, and a drill rod, of spring propelling means for the drill rod carried by the drill barrel and projecting from one end thereof, a plate or head on the drill rod beyond the end of the barrel to receive the force of the propelling means, a chuck secured to the drill rod and a loose collar between the plate or head and the chuck.

5. In a drill, the combination of a drill barrel, a reciprocating drill rod, an annular series of springs for propelling the drill rod, a clutch device to engage the drill rod, a trip for the clutch device, means connected with the clutch device for reciprocating it positively in both directions to first withdraw the drill rod and compress the propelling springs and then to reëngage the drill rod after the latter has been released and completed its throw.

6. In a drill, the combination with a drill body and a drill rod, of spring propelling means for the drill rod carried by the forward portion of the drill body and projecting forward therefrom, a crank shaft mounted in the rear portion of the drill body, a draw bar located in the rear portion of the drill body and operated by the crank shaft, a clutch device connected with and operated by said draw bar for withdrawing the drill rod, and means for tripping said clutch device to release the drill rod and permit the spring propelling means at the forward end of the drill body to actuate the drill rod.

7. In a drill, the combination with a drill body having a cylindrical bore throughout a portion of its length, of a drill rod having a cylindrical head at its rear end movable in said cylindrical bore, a crank shaft in the rear portion of the drill body, a clutch device connected with said crank shaft and entering the cylindrical head on the drill rod for withdrawing the latter, means for propelling the drill rod forwardly, and means for tripping the clutch device to release the drill rod and permit the operation of the propelling means.

8. In a drill the combination with a drill body, of a drill rod having a cylindrical head at its rear end, spring propelling means for the drill rod carried by the drill body, a crank shaft mounted in the drill body in rear of said cylindrical head, a clutch barrel connected with said crank shaft and adapted to enter said cylindrical head, clutch rollers between said clutch barrel and the wall of the cylindrical head and means for moving said rollers to release the drill rod.

9. In a drill, the combination with a drill body, of a drill rod having a cylindrical head, spring propelling means for the drill rod carried by the drill body, a crank shaft mounted in the drill body in rear of the cylindrical head of the drill rod, a clutch barrel connected with said crank shaft and adapted to enter said cylindrical head, a series of clutch rollers disposed between said clutch barrel and the wall of the cylindrical head, a carrier for said rollers, and means for operating said carrier to move the rollers and release the drill rod.

10. In a drill, the combination with a drill body, of a drill rod having a cylindrical head at its rear end, spring propelling means for the drill rod, a crank shaft, a clutch barrel connected with said crank shaft, clutch rollers between the clutch barrel and wall of the cylindrical head, a carrier for said rollers, a rod secured to said carrier and passing through the clutch barrel, a spring in the clutch barrel and having a bearing at one end therein and at the other end against the carrier and a trip lever pivotally connected with the rear end of said rod.

11. In a drill, the combination with a drill barrel, of a drill rod having a cylindrical head at its rear end, spring propelling means for the drill rod, a crank shaft mounted in the drill body, a draw bar movable in the drill body and having an elongated opening, a bearing box mounted on the crank shaft and movable in said draw bar, a clutch device connected with the draw bar and coöperating with the cylindrical head on the drill rod, and a trip for the clutch operated by the bearing box on the crank shaft.

12. In a drill, the combination with a drill body and a drill rod, of a crank shaft, a draw bar, a bearing box on the crank shaft and

adapted to reciprocate in the draw bar, a clutch for connecting the draw bar with the drill rod, a trip for said clutch operated by the bearing box on the crank shaft, and means for propelling the drill rod forwardly when it shall have been released from the draw bar.

13. In a drill, the combination with a drill body and a drill rod, of a draw bar, means for longitudinally reciprocating and simultaneously rotatably oscillating the draw bar, and means for coupling the drill rod with the draw bar when the latter moves rearwardly.

14. In a drill, the combination with a drill body and a drill rod, of a draw bar, means for longitudinally reciprocating and simultaneously rotatably oscillating said draw bar, means for maintaining the drill rod and draw bar coupled together during their rearward movement and means for propelling the drill rod forwardly independently of the forward movement of the draw bar.

15. In a drill, the combination with a drill body and a drill rod, of a longitudinally reciprocating and rotatably oscillating draw bar, and means for clutching the draw bar to the drill rod when the former moves rearwardly and releasing the drill rod from the draw bar after the latter completes its rearward throw, whereby the drill rod will be turned a part of a revolution during rearward strokes only, and means for propelling the drill rod forwardly independently of the draw bar.

16. In a drill, the combination with a drill body and a drill rod, said drill body having spiral grooves therein, of a draw bar movable in said spiral grooves, means for operating the draw bar, means for clutching the draw bar to the drill rod, whereby the draw bar will turn the drill rod during their rearward throw, means for releasing the drill rod from the draw bar, and means for propelling the drill rod forwardly.

17. In a drill, the combination with a drill body and a drill rod, of a crank shaft mounted in the drill body, a draw bar mounted in said drill body, a cross head movable in said draw bar and loosely mounted on the crank pin of said shaft, means for oscillating said draw bar when it is reciprocated by the crank shaft, means for clutching the draw bar to the drill rod when the draw bar moves rearwardly, means for releasing the drill rod from the draw bar and means for effecting the forward throw of the drill rod independently of the draw bar.

18. In a drill, the combination with a drill body or casing having a removable back door, a drill rod and a crank shaft mounted in said drill body or casing and means for connecting crank shaft and drill rod, of an electric motor attached to said back door, gearing carried by the motor casing, a gear secured to the crank shaft and meshing with the motor gearing, and gear casings inclosing the motor gearing and the gear wheel on the crank shaft.

19. In a drill, the combination with a drill body or casing, having guideways on its rear face, a crank shaft mounted in said casing, a drill rod and means for connecting the crank shaft with the drill rod, of an electric motor comprising a frame having guides to engage the guides on the rear end of the drill casing, gearing carried by the frame of the motor and receiving motion from the rotary member of the motor, a gear casing inclosing said gearing, a gear wheel on the crank shaft to receive motion from the motor gearing, and a casing for inclosing said gear wheel.

20. In a drill, the combination with a drill body and a spring propelled drill rod, of a motor, means operated continuously by said motor to withdraw the drill rod against the propelling springs, releasable connecting means for connecting the motor and drill rod, said drill body being so proportioned relatively to the throw of the withdrawing means and the drill rod that the drill rod can pass out of reach of the drawing means when the drill tool meets no resistance, whereby the drill rod can be stopped without stopping the motor.

21. In a drill, the combination with a drill body and a lining therein having elongated ratchet ribs, of a drill rod, a head on said rod, means for rotating the drill rod in one direction and ratchet blocks carried by said cylindrical head and engaging ratchet ribs in the lining to prevent rotation of the drill rod in the reverse direction.

In testimony whereof, I have signed this specification in the presence of two subscribing witnesses.

THOMAS EDGAR ADAMS.

Witnesses:
JOHN R. ORPUTT,
F. W. SINRAM.