United States Patent [19]

Saupe

[11] **3,850,521**

[45] **Nov. 26, 1974**

[54] **ELECTROPHOTOGRAPHIC COPYING APPARATUS**

[75] Inventor: **Wolfram Saupe,** Mammolshain, Germany

[73] Assignee: **Kalle Aktiengesellschaft,** Wiesbaden-Biebrich, Germany

[22] Filed: **May 30, 1973**

[21] Appl. No.: **365,279**

[52] **U.S. Cl.** **355/15,** 15/1.5, 15/309, 134/1

[51] **Int. Cl.** **G03g 15/00,** A471 13/40, B08b 7/00

[58] **Field of Search** 355/15, 3, 14; 134/1; 15/1.5, 309

[56] **References Cited**

UNITED STATES PATENTS

3,483,679	12/1969	Balbierer	355/15 UX
3,668,008	6/1972	Severynse	355/15 X
3,743,540	7/1973	Hudson	355/15 X

Primary Examiner—Richard A. Wintercorn

[57] **ABSTRACT**

An electrophotographic copying apparatus including a photoconductor, a charging station for the uniform electrostatic charging of the photoconductor, an exposure station for the image-wise exposure of the charged photoconductor, a developing station for developing the photoconductor by means of toner particles, a transfer station for transferring the toner image from the photoconductor onto a copy material, a cleaning station for removing residual toner from the photoconductor and a suction device equipped with a filter, where the toner-laden air issuing from the cleaning station is drawn off and the toner is separated by the filter. The filter is positioned behind the cleaning station and comprises at least two electrodes positioned opposite to each other and arranged so that the air current carrying toner passes between them. The electrodes may be rectangular, circular or cylindrical in shape.

10 Claims, 7 Drawing Figures

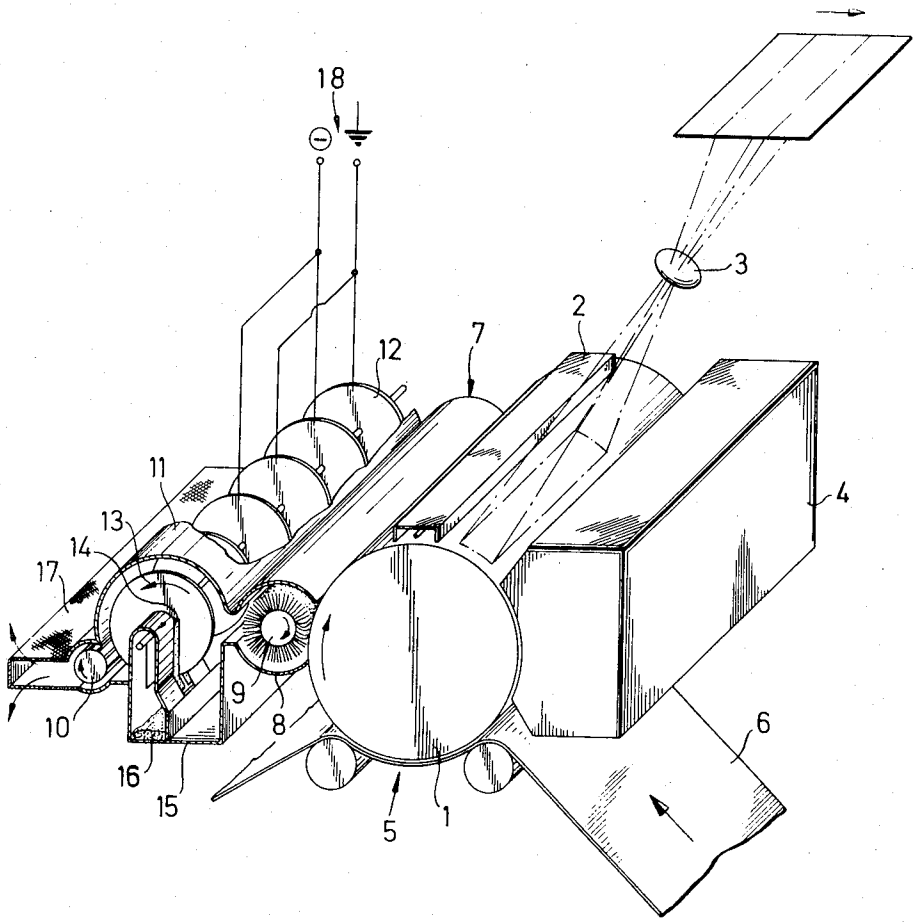

Fig.1

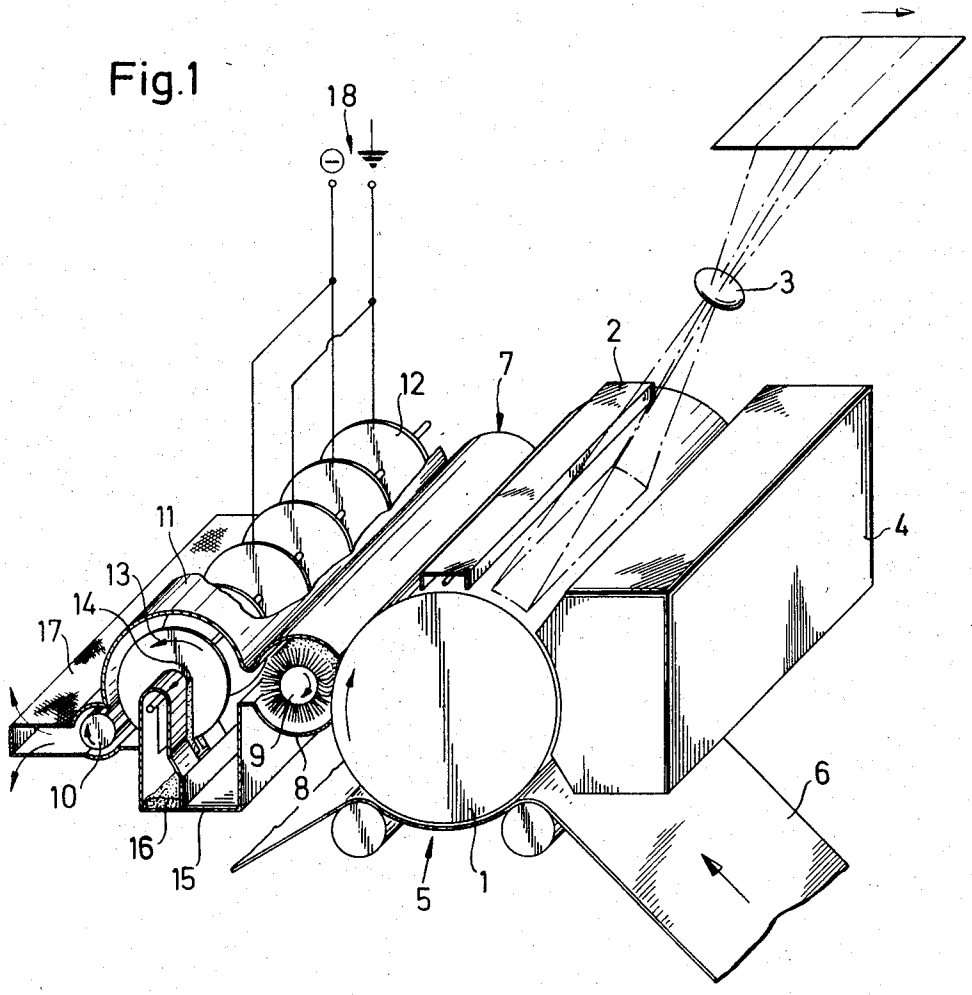

Fig.2

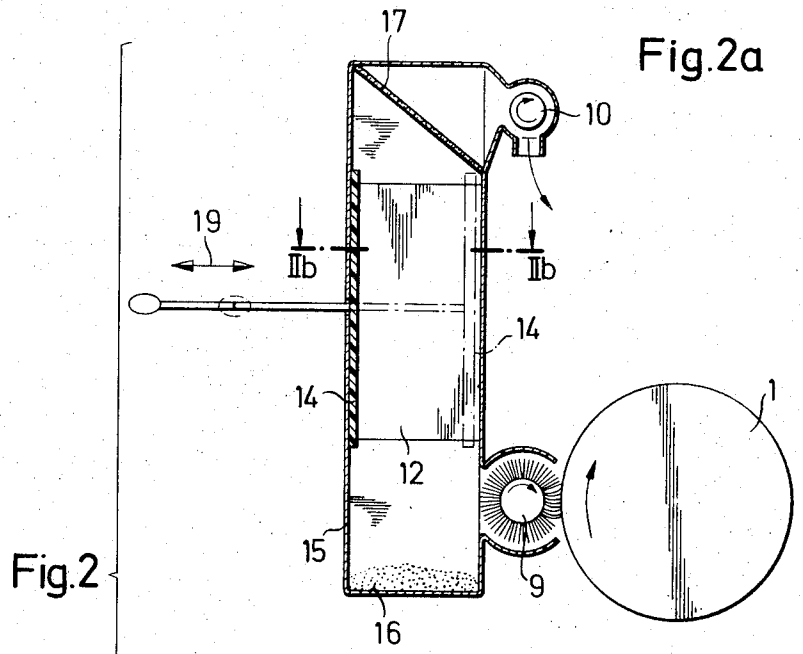

Fig.2a

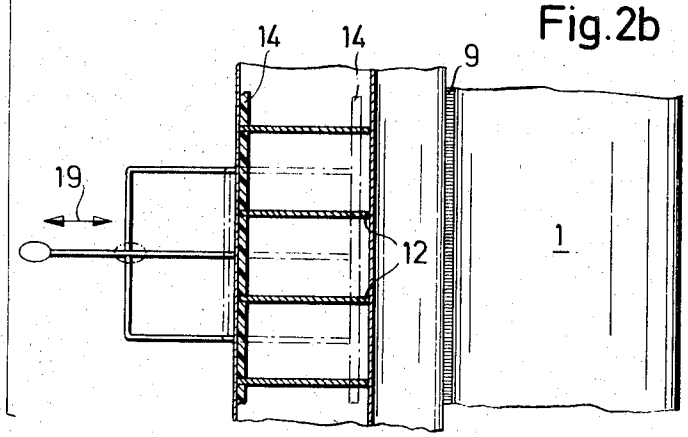

Fig.2b

Fig.3a

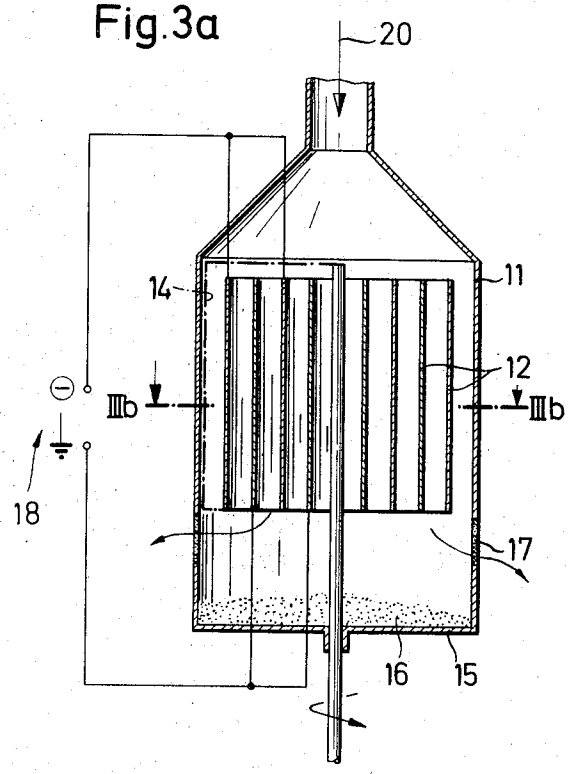

Fig.3b

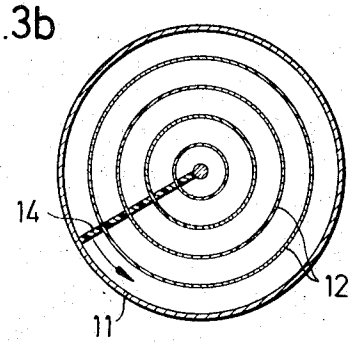

Fig.3

Fig. 4b

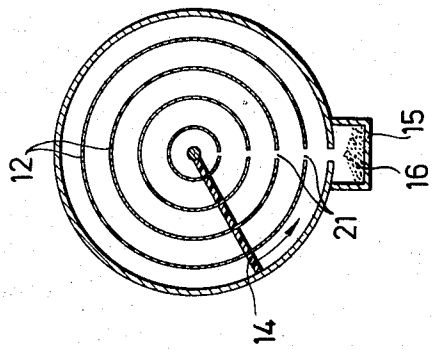

Fig. 4a

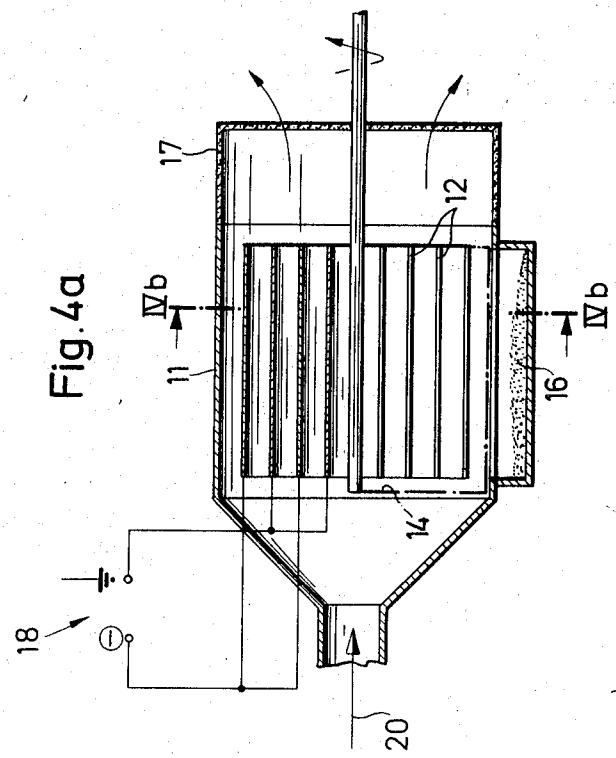

Fig. 4

ELECTROPHOTOGRAPHIC COPYING APPARATUS

The present invention relates to an electrophotographic copying apparatus comprising a reusable photoconductor, a charging station for charging the photoconductor, an exposure station for the image-wise exposure of the charged photoconductor, a developing station for developing the photoconductor by means of toner particles, a transfer station for transferring the toner image from the photoconductor to a copy material, a cleaning station for removing residual toner from the photoconductor, and a suction device equipped with a filter where the toner-laden air issuing from the cleaning station is drawn off and the toner is separated by the filter.

In known electrophotographic apparatuses of this type, the toner contained in the air drawn off is separated from the air current by means of a labyrinth filter. This means that the toner is lost. Moreover, such labyrinth filters increasingly lose in pressure with an increasing degree of contamination. Therefore, the filters require intensive maintenance and can be used only once.

In German Offenlegungsschrift No. 2,038,555, it has already been suggested to avoid these drawbacks by charging the toner particles with the aid of a corona discharge and then depositing them on a surface from where they are removed by means of a scraper. In this manner, it is possible to recover the toner from the air drawn off from the cleaning station.

This apparatus also has some undesirable features, however. Due to the use of sensitive corona wires in its construction, the apparatus is expensive, its separating capacity is not very high, and it involves the risk that individual particles of deposited toner are fused by local heat action due to a strong discharge.

It is the object of the present invention to provide a copying apparatus of the above described type equipped with a filter which is characterized in that the filter is positioned closely behind the cleaning station and comprises at least two electrode surfaces which are so constructed and arranged within the suction device in such a manner that the air current loaded with toner particles passes between the electrode surfaces and that at least one of the electrodes is grounded and at least one is connected to or capable of connection to a high voltage source.

It was found that in a copying apparatus of this construction, a very satisfactory cleaning of the air loaded with toner particles is possible. In this apparatus, there is no need for a corona discharge, and the residual charge of the toner particles themselves is utilized for cleaning the air. Therefore, the toner particles must be prevented from losing their residual charges during their transport from the cleaning station to the filtering device according to the invention, because otherwise the cleaning action of the electrodes would be substantially impaired.

In order to completely purify the air drawn off from the cleaning station and to prevent the air surrounding the copying apparatus from being contaminated by toner particles, if the high voltage source should fail, a mechanical safety filter is preferably arranged in the suction device behind the electrodes in the direction of the air current.

Although this mechanical filter has to be replaced from time to time, its useful life is substantially longer than that of the prior art filtering devices, because all the mechanical filter has to do is to remove residual toner particles from the air already cleaned by the electrodes.

Further, a wiper is preferably provided according to the present invention in order to remove the toner particles deposited on the electrodes. This wiper, which may be operated from the outside, detaches the separated toner material from the electrodes so that it drops into a collecting vessel. In this manner, not only the toner is recovered, but at the same time a uniform cleaning effect of the electrode surfaces is guaranteed. Standard constructional elements may be used when the electrodes are in the form of concentric cylinders arranged one within the other, with their axes corresponding to the main direction of the air current. If the cylinders are arranged with their axes horizontal and are slitted along the line of their lowest generatrix, the toner deposited may be removed by means of several brushes mounted for rotation about the cylinder axis, the wiped-off toner dropping through the slits into a tray placed beneath the outermost electrode.

A stationary wiper may be used when the electrodes consist of several flat circular disks mounted for rotation around their common median perpendicular.

The present invention will be described in more detail by reference to the following embodiments shown in the drawings, in which:

FIG. **1** is a diagrammatic representation of an electrophotographic copying apparatus according to the present invention, with the toner separating device enlarged;

FIG. **2***a* is another embodiment of a toner separating device according to the present invention;

FIG. **2***b* is a partial plan view of the embodiment of FIG. **2***a;*

FIG. **3***a* shows a toner separating device of the present invention in which the electrodes are in the form of concentric cylinders;

FIG. **3***b* is a partial plan view of the device of FIG. **3***a;*

FIG. **4***a* shows another version of a toner separating device of the present invention in which the electrodes are in the form of concentric cylinders; and

FIG. **4***b* is a partial plan view of the device of FIG. **4***a*.

In the electrophotographic copying apparatus shown in FIG. **1**, a photoconductor drum **1** is provided with a uniform electrostatic charge in a charging station **2.** In an exposure station **3,** the charged photoconductor layer is image-wise exposed, and the resulting charge image is developed in a developing station **4** by means of toner particles. The toner image thus produced on the drum **1** is then transferred in a transfer station **5** onto the copy material **6,** e.g., paper.

In a cleaning station, generally designated as **7,** the surface of the photoconductor **1** is freed from residual toner still adhering to it. For this purpose, a rotatable roller brush **9** covered with a long-haired nap is arranged within a casing **8.** This roller brush **9** may be rotated in the direction of the arrow, i.e opposite to the direction of rotation of the photoconductor drum. By means of a transverse blower **10** of the same width as the drum **1,** air is sucked into the casing **8** of the cleaning station **7.** Thus, the air blast is directed in a simple

manner, with little loss of pressure. The air supplied in this manner entrains the toner particles wiped off by the brush **9** and carries them to the separating station **11** described below.

Within the separating station, the casing **8** contains a special filter. This filter comprises several circular electrode plates **12** which have a common median perpendicular and are arranged at substantially the same distance from each other. The total width of this electrode system also corresponds to the width of the conductor drum. Thus, on its path from the photoconductor over the cleaning brush, the filter and the transverse blower to the safety filter, the air current always has the same width, measured transversely to the direction of the air current. The electrode plates **12** are alternatively connected to earth and to a high voltage source (−6,000 V). The electrode plates of the separating station **11** are mounted as closely as possible to the cleaning brush **9.**

The electrode plates **12** are mounted on a common shaft and may be rotated in the direction of the arrow **13** or in the opposite direction, by means of a motor (not shown). Moreover, each of the toner-accepting electrode plates is provided with a wiper **14** which extends from the axis of rotation of the disk to its periphery. The toner collected by such wiper **14** may drop into a vessel **15** disposed beneath the separating device. If desired, the toner **16** collected in said vessel may be used again.

In order to catch any traces of toner which may be contained in the air and to guarantee that the toner does not escape into the air surrounding the apparatus, if the high voltage source should fail, a safety filter **17** is provided on the air-outlet side of the blower **10.**

By its rotation, the brush **9** removes all toner particles still present on the photoconductor drum **1.** The air blast produced by the blower **10** lifts these toner particles from the brush and carries them between the electrode plates **12.** Since the electrode plates are arranged immediately adjacent to the brush, the toner particles can not become discharged. The residual positive charge of the toner particles causes them to be attracted by those plates which are connected to the negative pole of the high voltage source **18.** Therefore, the toner particles deposit on these electrode plates. By the rotation of the plates **12,** the deposited toner particles are seized by the wiper **14** and drop into the collecting vessel **15.** Toner particles still adhering to the electrode plates are conveyed to the safety filter by means of the blower **10.** The air issuing from the safety filter is cleaned completely.

In the device shown in FIGS. **2***a* and **2***b*, the safety filter **17** is arranged in front of the blower **10.** In this case, the electrode plates **12** are of substantially rectangular shape and the wipers **14** may be displaced in the horizontal direction, as indicated by the arrow **19.** The toner material drops into the collecting vessel **15.**

In the separating devices **11** shown in FIGS. **3***a*/*b* and **4***a*/*b*, the electrodes **12** take the form of concentric cylinders. In the embodiment shown in FIGS. **3***a* and **3***b*, these cylinders are arranged upright, i.e., their common axis extends in the vertical direction. The toner-laden air to be cleaned enters the separating device in the direction of the arrow **20.** Each of the cylinders **12** is connected either to the high voltage source **18** or to earth.

The toner deposited by the air current on the cylindrical electrodes **12** is removed by means of a wiper **14** which rotates about the axis of the cylinders. The toner wiped off drops to the bottom section **15** of the flask-like separating station **11.** The outer cylinder jacket of the separating station **11** is provided with an annular safety filter **17** by which any traces of toner still contained in the air are held back.

The separating station **11** shown in FIGS. **4***a* and **4***b* corresponds to the device shown in FIGS. **3***a* and **3***b* as far as the construction of the electrodes is concerned. In this case, however, the electrodes are arranged in such a manner that their common cylinder axis is horizontal. Further, the electrodes are provided with slits **21** which for each electrode extend along the line of its lowest generatrix. The wiper **14** pushes the toner particles deposited on the electrodes to the slit **21.** The separated toner drops through the slits **21** into the collecting vessel **15.** In this embodiment, the safety filter may cover the whole front surface away from the air intake side of the separating station **11,** as is shown in FIGS. **4***a* and **4***b*.

In the embodiments shown in the drawings, the distance between the electrodes ranges from 5 to 50 mm. The voltage applied to the electrodes is preferably in the range from −3 kV to −15 kV, when the photoconductor is negatively charged. The air passing the electrodes should have a speed of the order of 0.5 to 3.0 m/sec. When using a separating station of the inventive construction 93 percent of the toner contained in the air current could be easily recovered.

The following should be noted when selecting the distance between electrodes: The distance of the electrode surfaces should be so wide that at the voltage used during operation (i.e., −6 kV, for example), spark-overs are reliably avoided. For this purpose, a spark-over voltage should be considered which corresponds to spark-overs between peaks and plates in air, because the surface of the electrodes becomes relatively inhomogeneous when toner is deposited thereon, so that the higher spark-over voltages between plates can no longer be applied. This means that, although at a voltage of 5 kV a distance between electrodes of 10 mm is absolutely sufficient, distances between 30 and 40 mm should be selected for a voltage of 10 kV. Of course, these values are dependent on air humidity and atmospheric pressure.

What is claimed is:

1. Electrophotographic copying apparatus comprising

a. a reusable photoconductor,

b. a charging station for the uniform electrostatic charging of this photoconductor,

c. an exposure station for the image-wise exposure of the charged photoconductor,

d. a developing station for developing the photoconductor by means of charged toner particles,

e. a transfer station for transferring the charged toner image from the photoconductor onto a copy material,

f. a cleaning station for removing residual charged toner from the photoconductor, and

g. a suction device equipped with a filter, where the toner-laden air issuing from the cleaning station is drawn off and the charged toner is separated by the filter, said filter being positioned closely behind the cleaning station and comprising at least two elec-

trode surfaces opposite to each other which are so constructed and arranged within the suction device in such a manner that the air current loaded with charged toner passes between them, and at least one of the electrodes is grounded and at least one of the electrodes is connected to or capable of connection to a high voltage source.

2. The copying apparatus according to claim **1,** in which the distance between the electrodes is substantially the same and the electrodes are alternatively connected to one or the other of the two poles of the high voltage source.

3. The copying apparatus according to claim **1,** including a mechanical safety filter arranged in the suction device behind the electrodes in the direction of the air current.

4. The copying apparatus according to claim **1,** including a wiper for removing deposited charged toner particles from the electrodes.

5. The copying apparatus according to claim **1,** in which the electrodes are in the form of concentric cylinders arranged one within the other, with their axis corresponding to the main direction of the air current.

6. The copying apparatus according to claim **5,** in which the electrodes are in the form of concentric cylinders arranged so that their axis is horizontal, said cylinders being slit along the line of their lowest generatrix, the wiper consists of a number of brushes mounted for rotation around the axis of the cylinders, that the brushes contact the cylinder electrodes along their generatrices, and below the outermost electrode there is a vessel for collecting the separated charged toner dropping through the slits.

7. The copying apparatus according to claim **1,** including stationary wipers for said electrodes, said electrodes consisting of several circular disks whose centers lie on a common perpendicular and are mounted for rotation.

8. The copying apparatus according to claim **1,** in which the electrodes consist of several substantially rectangular plates which are arranged parallel to each other.

9. The copying apparatus according to claim **1,** in which the cleaning station substantially consists of a rotatable roller brush, the roller brush and the electrodes are arranged closely adjacent in a common casing which has two openings, one of the openings being closely adjacent to the photoconductor to be cleaned, and the other being in connection with a suction blower.

10. The copying apparatus according to claim **7,** in which the suction device is equipped with a transverse blower and the width of the transverse blower and the width of the filter substantially correspond to the width of the photoconductor drum.

* * * * *