US 20140198195A1

(19) United States

(12) Patent Application Publication

(10) Pub. No.: US 2014/0198195 A1

(43) Pub. Date: Jul. 17, 2014

JUN et al.

(54) TERAHERTZ HEALTH CHECKER

(71) Applicant: **Electronics and Telecommunications Research Institute**, Daejeon (KR)

(72) Inventors: **Dong Suk JUN**, Daejeon (KR); **Seok-Hwan MOON**, Daejeon (KR); **In-Kyu YOU**, Daejeon (KR); **Jae Ick CHOI**, Daejeon (KR)

(73) Assignee: **Electronics and Telecommunications Research Institute**, Daejeon (KR)

(21) Appl. No.: **14/156,804**

(22) Filed: **Jan. 16, 2014**

(30) **Foreign Application Priority Data**

Jan. 17, 2013 (KR) 10-2013-0005390
Oct. 18, 2013 (KR) 10-2013-0124408

Publication Classification

(51) **Int. Cl.**
H04N 5/33 (2006.01)

(52) **U.S. Cl.**
CPC *H04N 5/33* (2013.01)
USPC **348/77**

(57) **ABSTRACT**

Provided is a terahertz health checker. The terahertz health checker includes a terahertz wave transmitter generating terahertz waves in a terahertz band, a lens outputting the terahertz waves and receiving terahertz waves reflected from the outputted terahertz waves, an imaging chip connected to the lens, detecting the received terahertz waves, and generating a digital image signal based on the detected terahertz waves, a readout circuit reading out the digital image signal, and a transceiver outputting the read-out digital image signal to the outside.

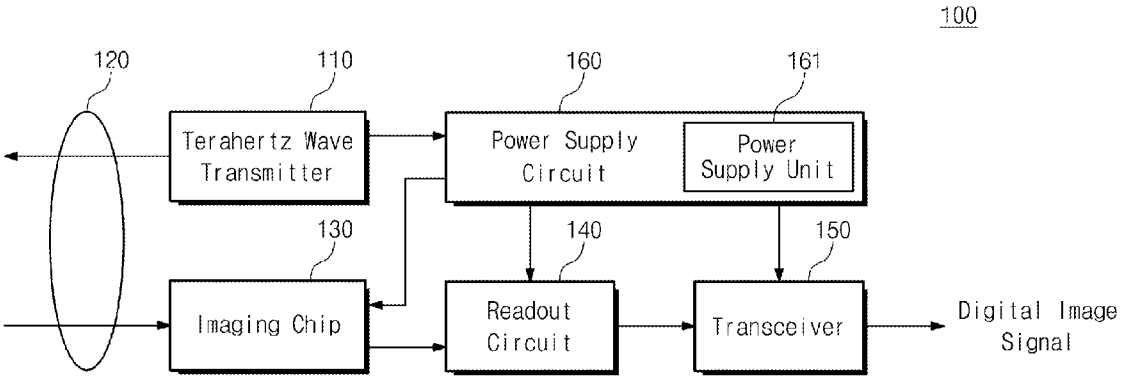

Fig. 1

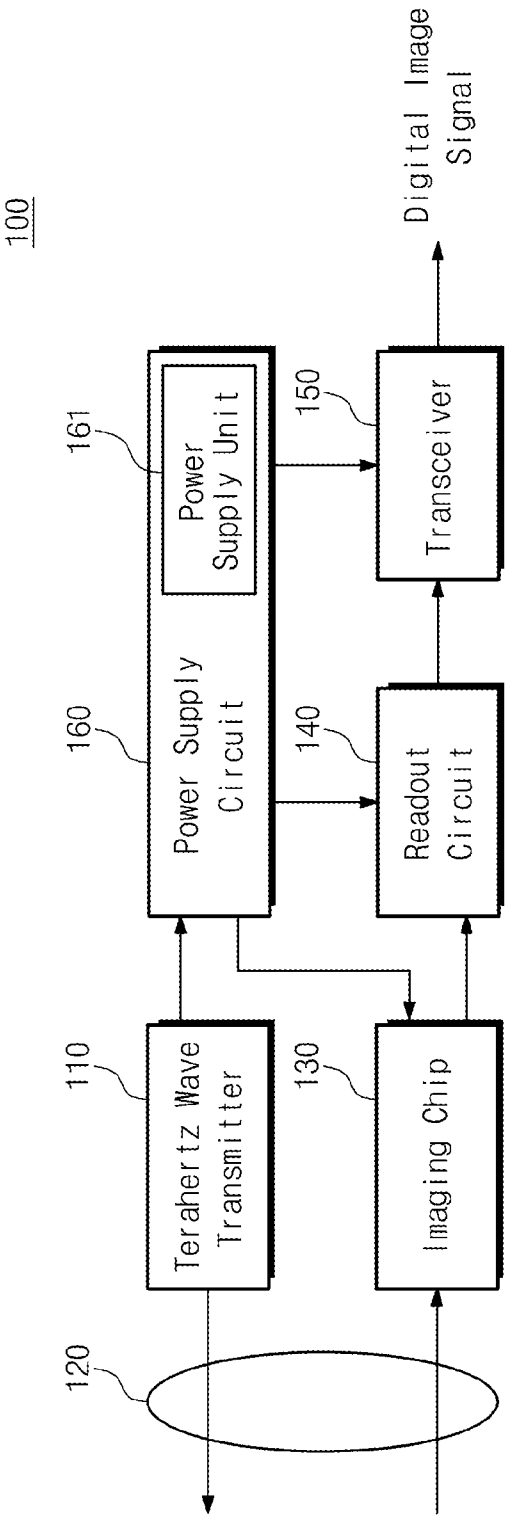
100
Digital Image Signal
161
Power Supply Unit
150
Transceiver
160
Power Supply Circuit
140
Readout Circuit
110
Terahertz Wave Transmitter
130
Imaging Chip
120

Fig. 2

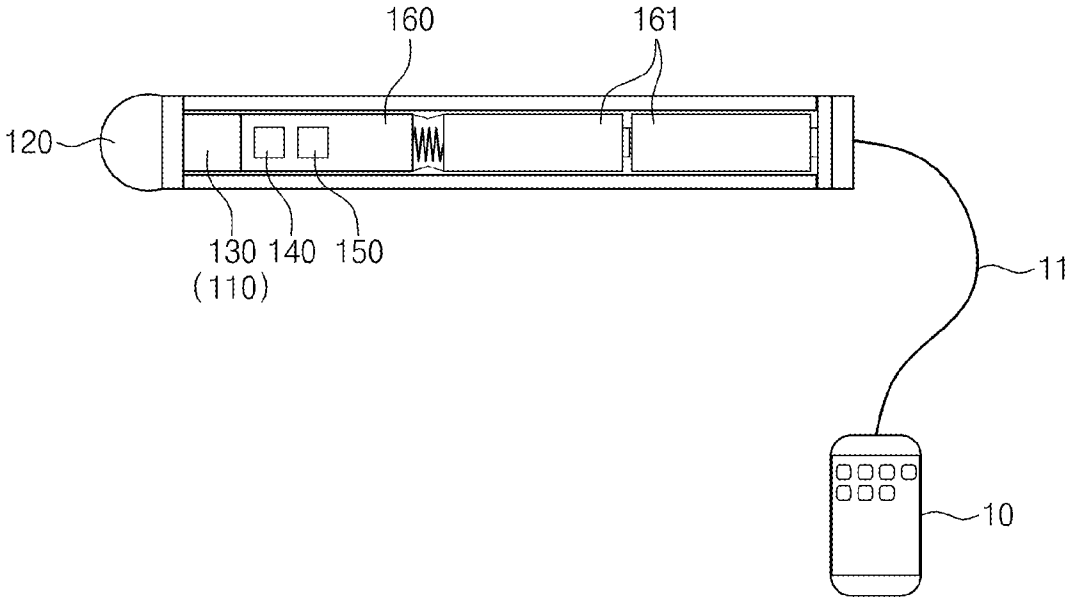

Fig. 3

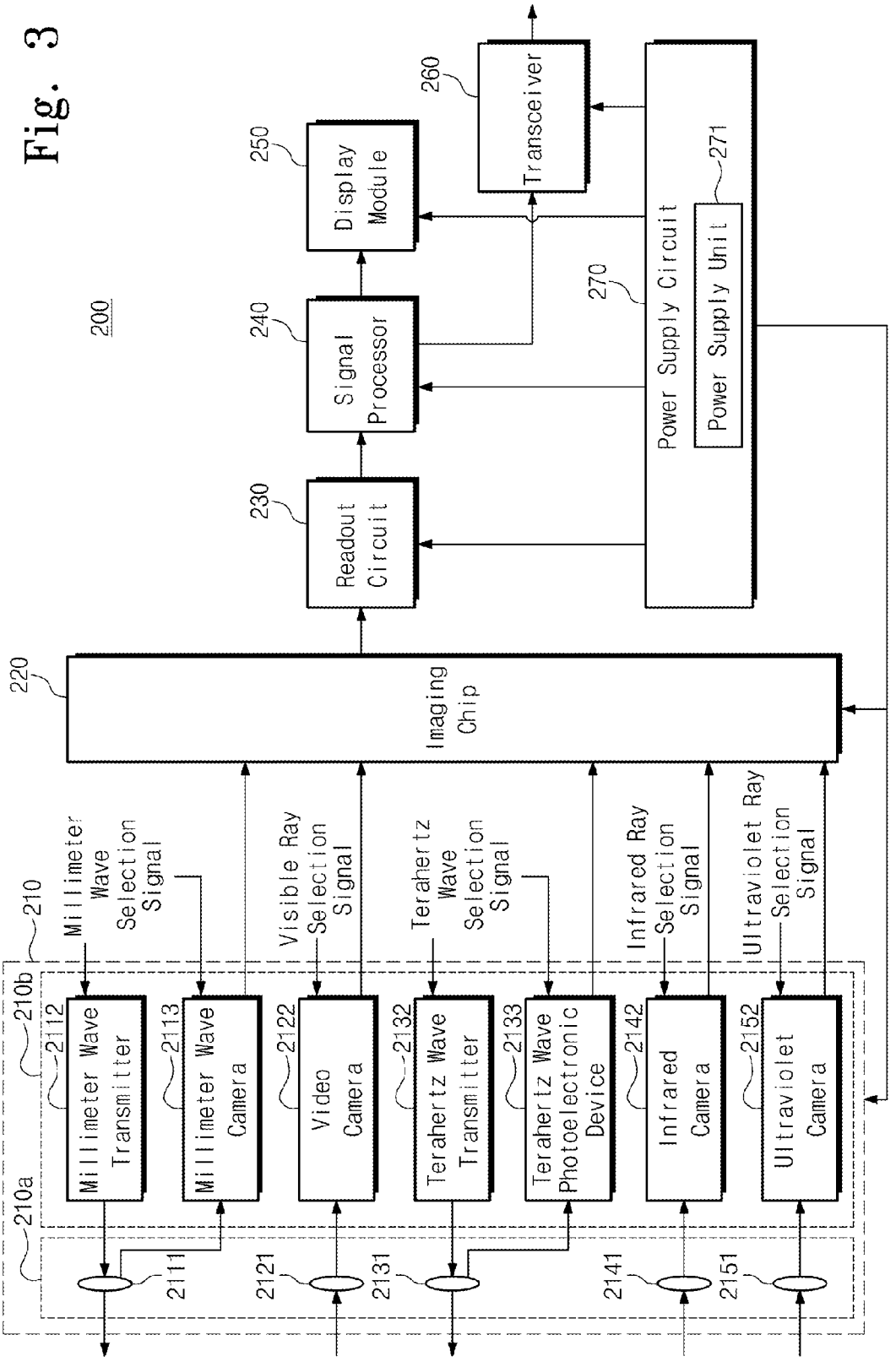
200
260
Transceiver
250
Display Module
240
Signal Processor
230
Readout Circuit
270
Power Supply Circuit
271
Power Supply Unit
220
Imaging Chip
210
210a
210b
Millimeter Wave Selection Signal
Visible Ray Selection Signal
Terahertz Wave Selection Signal
Infrared Ray Selection Signal
Ultraviolet Ray Selection Signal
2112
Millimeter Wave Transmitter
2113
Millimeter Wave Camera
2122
Video Camera
2132
Terahertz Wave Transmitter
2133
Terahertz Wave Photoelectronic Device
2142
Infrared Camera
2152
Ultraviolet Camera
2111
2121
2131
2141
2151

Fig. 4

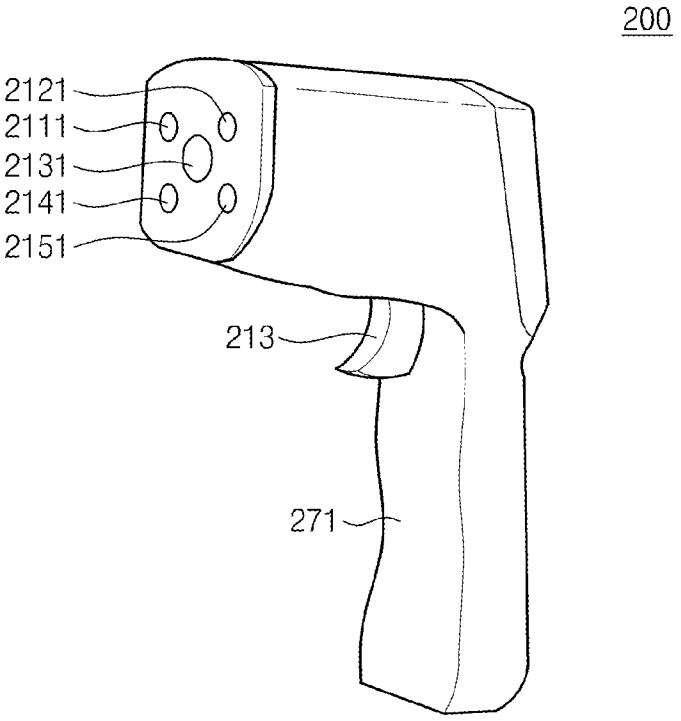

Fig. 5

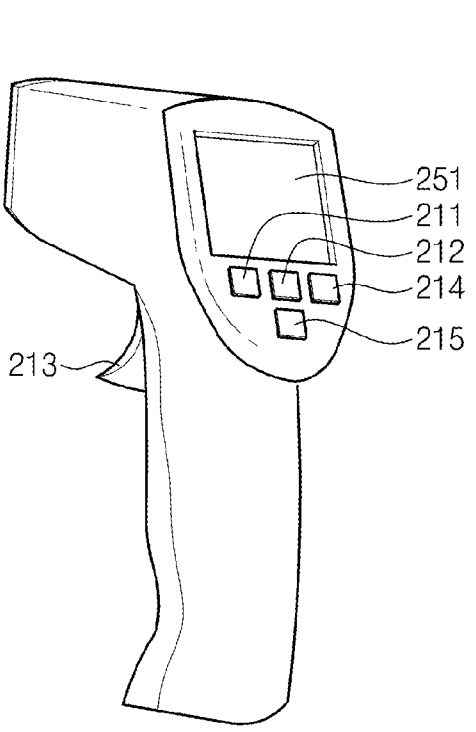

Fig. 6

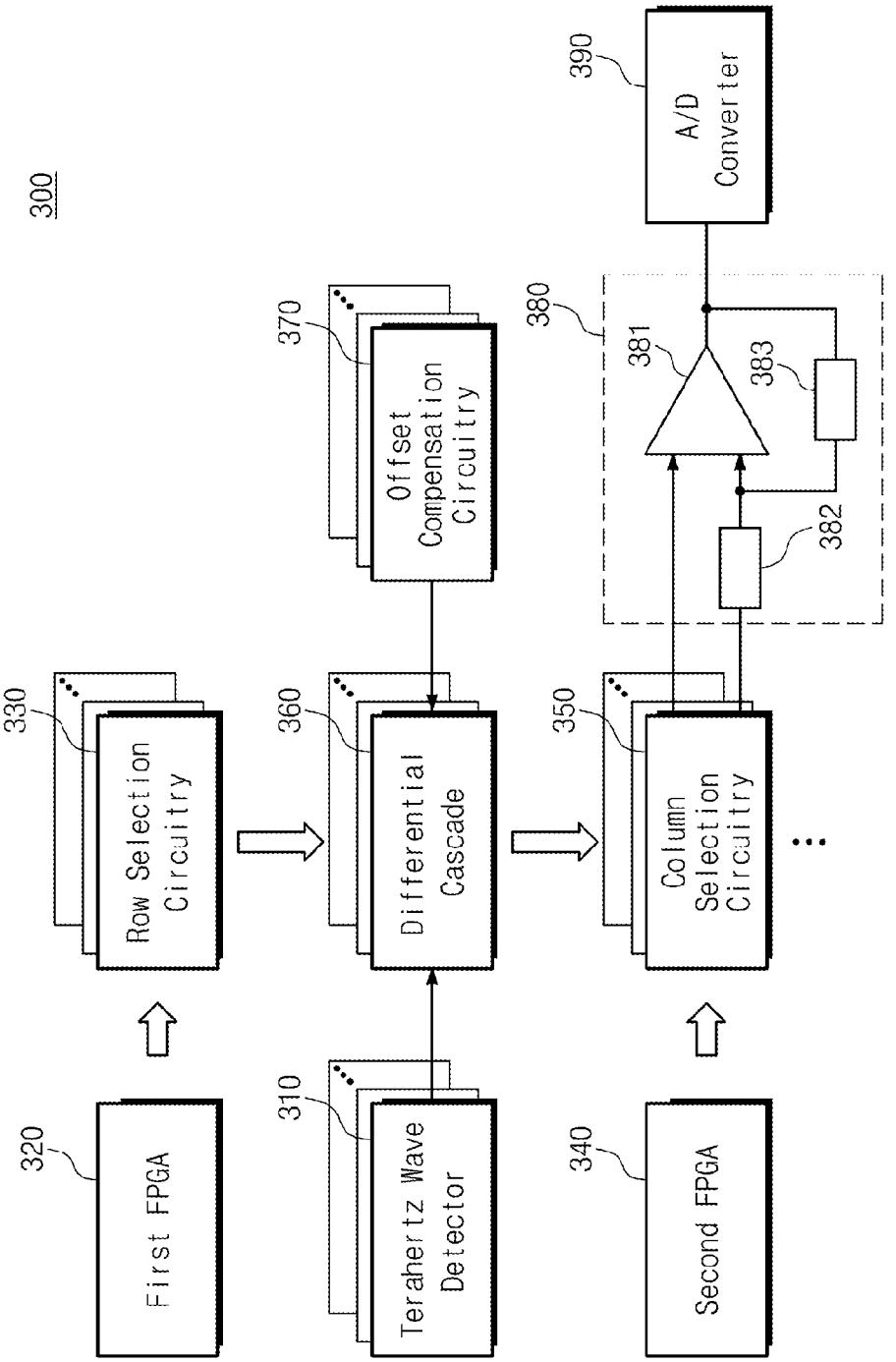
300
390
A/D Converter
380
381
383
382
370
Offset Compensation Circuitry
330
Row Selection Circuitry
360
Differential Cascade
350
Column Selection Circuitry
320
First FPGA
310
Teraherz Wave Detector
340
Second FPGA

Fig. 7

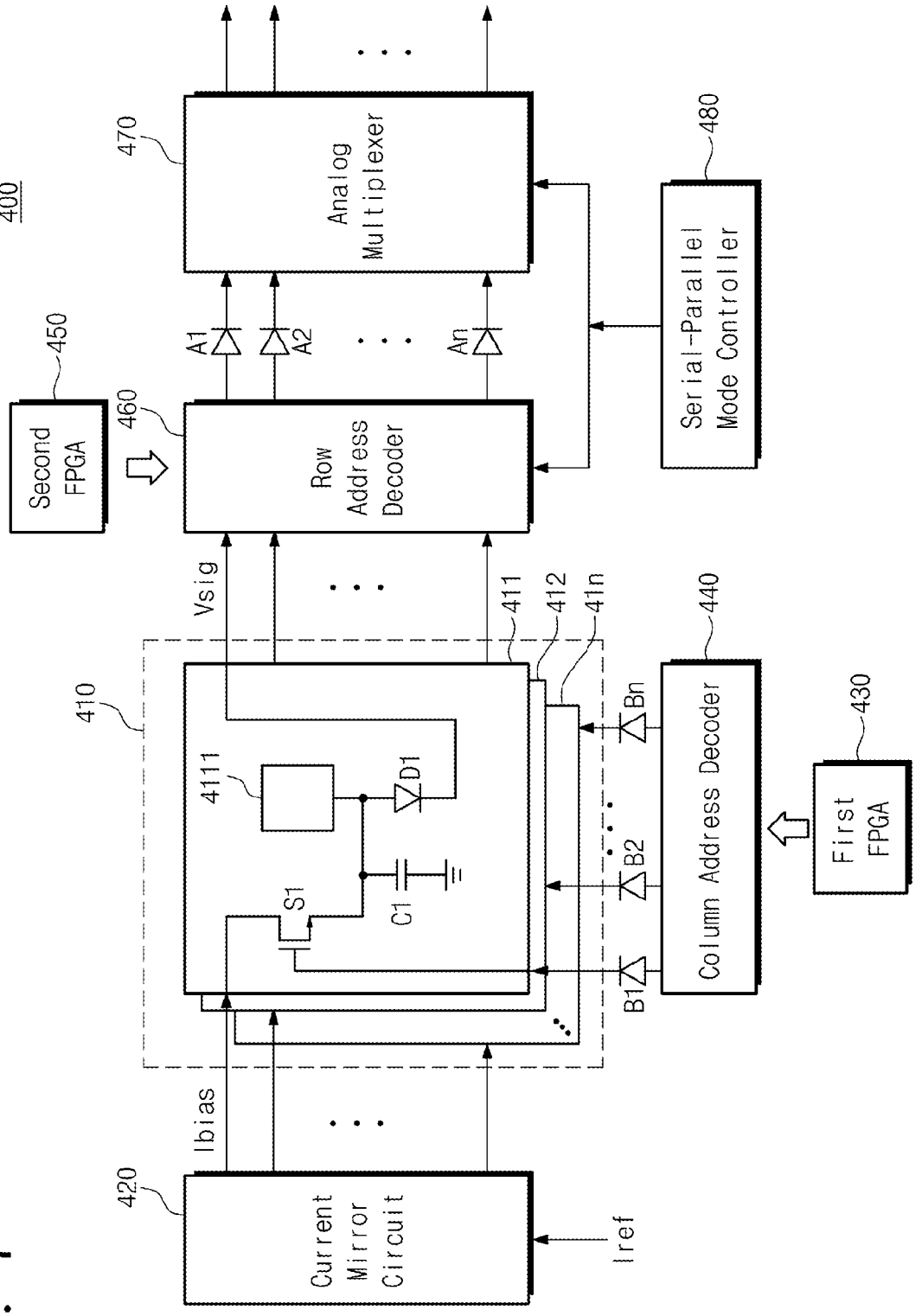
400
470
Analog Multiplexer
480
Serial-Parallel Mode Controller
450
Second FPGA
460
Row Address Decoder
A1
A2
An
Vsig
411
412
41n
410
4111
D1
S1
C1
Bn
B2
B1
440
Column Address Decoder
430
First FPGA
Ibias
420
Current Mirror Circuit
Iref

Fig. 8

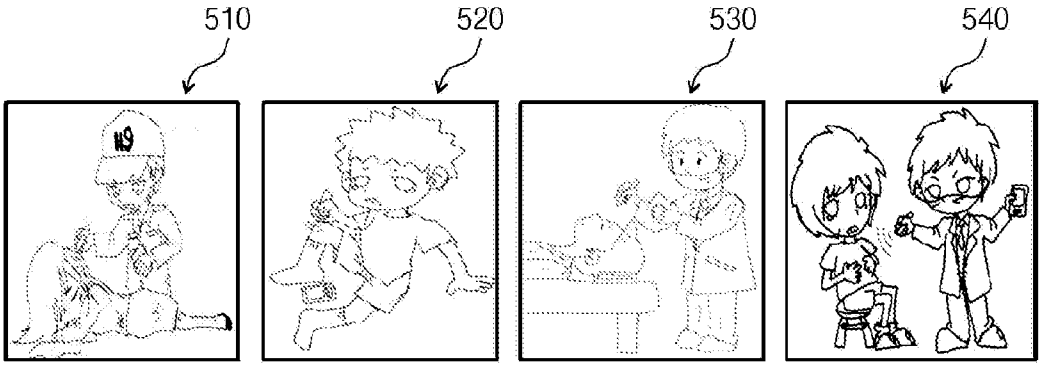

TERAHERTZ HEALTH CHECKER

CROSS-REFERENCE TO RELATED APPLICATIONS

[0001] This U.S. non-provisional patent application claims priority under 35 U.S.C. §119 of Korean Patent Application Nos. 10-2013-0005390, filed on Jan. 17, 2013, and 10-2013-0124468, filed on Oct. 18, 2013, the entire contents of which are hereby incorporated by reference.

BACKGROUND OF THE INVENTION

[0002] The present disclosure herein relates to a detection and measurement system, and more particularly, to a terahertz health checker using a terahertz band.

[0003] Generally, there are many kinds of detection devices for detecting peripheral environments, objects, animals, human bodies. As an example, detection devices using X-rays may have bad effects on animals or human bodies due to radiation included in X-ray signals. Since visible rays have total reflection properties, it is difficult to use detection devices using visible rays. Due to peripheral environments or colors of targets to be detected, detection devices using infrared rays have a limitation in a detection distance. Also, detection devices using ultraviolet rays receive a great effect from an electric field and have severe fluctuation in noise according to size.

[0004] As an example, health checkers are used as detection devices for checking a physical condition of a human body. Due thereto, health checkers overcoming limitations of general detection devices and having high resolution, that is, high measuring performance are needed.

[0005] In addition, such health checkers may be used to frequently measure pulses, blood pressures, and cardiac impulses or may be used in situations such as occurrence of emergency patients. For this, health checkers have evolved to have easily portable small sized shapes. Accordingly, it is necessary to reduce a size of a health checker.

SUMMARY OF THE INVENTION

[0006] The present disclosure provides a terahertz health checker having high resolution and using terahertz waves.

[0007] The present disclosure also provides a terahertz health checker having a small size.

[0008] Embodiments of the present invention provide terahertz health checkers including a terahertz wave transmitter generating terahertz waves in a terahertz band, a lens outputting the terahertz waves and receiving terahertz waves reflected from the outputted terahertz waves, an imaging chip connected to the lens, detecting the received terahertz waves, and generating a digital image signal based on the detected terahertz waves, a readout circuit reading out the digital image signal, and a transceiver outputting the read-out digital image signal to the outside.

[0009] In some embodiments, the digital image signal may be an image-shaped signal formed of digital signals 0 and 1 depending on whether terahertz waves detected from a detection area of the outputted terahertz waves are present or not.

[0010] In other embodiments, the terahertz health checker may further include a power supply circuit for supplying operating power to the terahertz transmitter, the imaging chip, the readout circuit, and the transceiver.

[0011] In still other embodiments, the terahertz health checker may further include a millimeter wave generator for generating and transmitting a millimeter wave signal, a lens outputting the generated millimeter waves and receiving millimeter waves corresponding to the outputted millimeter waves, and a millimeter wave camera outputting the received millimeter wave signal to the imaging chip.

[0012] In even other embodiments, the terahertz health checker may further include a lens for receiving visible rays and a video camera outputting the received visible rays to the imaging chip.

[0013] In yet other embodiments, the terahertz health checker may further include a lens for receiving infrared rays and an infrared camera outputting the received infrared rays to the imaging chip.

[0014] In further embodiments, the terahertz health checker may further include a lens for receiving ultraviolet rays and an ultraviolet camera outputting the received ultraviolet rays to the imaging chip.

[0015] In still further embodiments, the terahertz health checker may further include a signal processor processing the digital image signal and a display module displaying the signal-processed image.

[0016] In even further embodiments, the imaging chip may include a first field programmable gate array (FPGA) generating a row address, a row selection circuitry generating row bits using the row address, a terahertz wave detector detecting the terahertz waves, a differential cascade matching the detected terahertz waves with the row bits and outputting the same, a second FPGA generating a column address, a column selection circuitry generating column bits using the column address, matching the terahertz waves matched with the row bits with the column bits, and output the same, a sample hold amplifier amplifying a terahertz wave signal matched with the column bits and row bits and outputting the amplified signal using a holding operation according to an external control signal, and an A/D converter converting the amplified signal into a digital signal and outputting the digital signal.

[0017] In yet further embodiments, the imaging chip may further include an offset compensation circuitry compensating the differential cascade with an offset of the detected terahertz wave signal.

[0018] In much further embodiments, the imaging chip may include a first FPGA generating a column address, a column address decoder generating a column selection address using the column address, a current mirror circuit receiving a reference current and providing a current signal for detecting terahertz waves, a terahertz wave detector detecting the received terahertz waves based on the current signal and the column selection address, a second FPGA generating a row address, a row address decoder generating a row selection address using the row address and outputting the detected terahertz waves using the row selection address, an analog multiplexer multiplexing and outputting the outputted terahertz waves by operating in one of a serial mode and a parallel mode, and a serial-parallel mode controller controlling operations of the row address decoder and the analog multiplexer as one of the serial mode and parallel mode.

[0019] In still much further embodiments, the terahertz wave detector may include a plurality of terahertz wave detecting devices. The terahertz wave detecting device may include an antenna detecting the terahertz waves, a switch receiving the current signal through a drain and operating according to the column selection address inputted through a gate, a capacitor whose one end is connected to a source of the

switch and another is grounded, and a Shottky diode whose anode is connected to a contact point between the one end of the capacitor and an output of the antenna, the Shottky diode outputting the terahertz waves detected by the antenna through a cathode thereof.

[0020] In even much further embodiments, the imaging chip may further include a plurality of buffers providing the terahertz wave detecting devices with outputs of the column address decoder, respectively and a plurality of amplifiers amplifying a plurality of outputs of the row address decoder.

[0021] In other embodiments of the present invention, terahertz health checkers include a lens receiving terahertz waves, an imaging chip connected to the lens, detecting the received terahertz waves, and generating a digital image signal based on the detected terahertz waves, and a readout circuit reading out the digital image signal. In this case, the imaging chip includes a first FPGA generating a row address, a row selection circuitry generating row bits using the row address, a terahertz wave detector detecting the terahertz waves, a differential cascade matching the detected terahertz waves with the row bits and outputting the same, a second FPGA generating a column address, a column selection circuitry generating column bits using the column address, matching the terahertz waves matched with the row bits with the column bits, and output the same, a sample hold amplifier amplifying a terahertz wave signal matched with the column bits and row bits and outputting the amplified signal using a holding operation according to an external control signal, and an A/D converter converting the amplified signal into a digital signal and outputting the digital signal.

[0022] In some embodiments, the digital image signal may be an image-shaped signal formed of digital signals 0 and 1 depending on whether terahertz waves detected from a detection area of the outputted terahertz waves are present or not.

[0023] In other embodiments, the imaging chip may further include an offset compensation circuitry compensating the differential cascade with an offset of the detected terahertz wave signal.

[0024] In still other embodiments of the present invention, terahertz health checkers include a lens receiving terahertz waves, an imaging chip connected to the lens, detecting the received terahertz waves, and generating a digital image signal based on the detected terahertz waves, and a readout circuit reading out the digital image signal. In this case, the imaging chip includes a first FPGA generating a column address, a column address decoder generating a column selection address using the column address, a current mirror circuit receiving a reference current and providing a current signal for detecting terahertz waves, a terahertz wave detector detecting the received terahertz waves based on the current signal and the column selection address, a second FPGA generating a row address, a row address decoder generating a row selection address using the row address and outputting the detected terahertz waves using the row selection address, an analog multiplexer multiplexing and outputting the outputted terahertz waves by operating in one of a serial mode and a parallel mode, and a serial-parallel mode controller controlling operations of the row address decoder and the analog multiplexer as one of the serial mode and parallel mode.

[0025] In some embodiments, the digital image signal may be an image-shaped signal formed of digital signals 0 and 1 depending on whether terahertz waves detected from a detection area of the outputted terahertz waves are present or not.

[0026] In other embodiments, the terahertz wave detector may include a plurality of terahertz wave detecting devices. The terahertz wave detecting device may include an antenna detecting the terahertz waves, a switch receiving the current signal through a drain and operating according to the column selection address inputted through a gate, a capacitor whose one end is connected to a source of the switch and another is grounded, and a Shottky diode whose anode is connected to a contact point between the one end of the capacitor and an output of the antenna, the Shottky diode outputting the terahertz waves detected by the antenna through a cathode thereof.

[0027] In still other embodiments, the imaging chip may further include a plurality of buffers providing the terahertz wave detecting devices with outputs of the column address decoder, respectively and a plurality of amplifiers amplifying a plurality of outputs of the row address decoder.

BRIEF DESCRIPTION OF THE DRAWINGS

[0028] The accompanying drawings are included to provide a further understanding of the present invention, and are incorporated in and constitute a part of this specification. The drawings illustrate exemplary embodiments of the present invention and, together with the description, serve to explain principles of the present invention. In the drawings:

[0029] FIG. **1** is a view illustrating a terahertz health checker according to an embodiment of the present invention;

[0030] FIG. **2** is a view illustrating an external shape of the terahertz health checker of FIG. **1**;

[0031] FIG. **3** is a view illustrating a terahertz health checker according to another embodiment of the present invention;

[0032] FIG. **4** is a view illustrating one side of the terahertz health checker of FIG. **3**;

[0033] FIG. **5** is a view illustrating another side of the terahertz health checker of FIG. **3**;

[0034] FIG. **6** is a view illustrating a terahertz wave detector and a readout circuit according to an embodiment of the present invention;

[0035] FIG. **7** is a view illustrating a terahertz wave detector and a readout circuit according to another embodiment of the present invention; and

[0036] FIG. **8** is a view illustrating operations of using the terahertz health checker.

DETAILED DESCRIPTION OF PREFERRED EMBODIMENTS

[0037] Hereinafter, preferred embodiments of the present invention will be described below in more detail with reference to the accompanying drawings. In a following description, only parts necessary for understanding operations according to the embodiments will be described and a description of other parts will be omitted not to obscure the subject matters of the present invention.

[0038] The present invention provides a terahertz health checker using a terahertz band, being portable, and having high performance. The terahertz health checker uses transmission and reflection properties of terahertz waves. Terahertz waves are electronic waves having penetrability, which have excellent penetrating force due to a wavelength thereof longer than that of visible rays or infrared rays but do not cause harm to human bodies because of low energy.

[0039] Due thereto, the terahertz health checker may obtain and use digital images of terahertz waves of a signal reflected and returning through a human body.

[0040] Although the embodiments will be described based on the terahertz health checker, the embodiments may be used to detect properties of diverse targets to be detected, such as environments, objects, and animals in other fields.

[0041] FIG. **1** is a view illustrating a terahertz health checker **100** according to an embodiment of the present invention.

[0042] Referring to FIG. **1**, the terahertz health checker **100** includes a terahertz wave transmitter **110**, a lens **120**, an imaging chip **130**, a readout circuit **140**, a transceiver **150**, and a power supply circuit **160**.

[0043] The terahertz wave transmitter **110** may operate in response to an operation control signal, etc. and generates terahertz waves in a terahertz band. The terahertz wave transmitter **110** outputs the generated terahertz waves to the lens **120**.

[0044] The lens **120** outputs inputted terahertz waves and receives terahertz waves reflected and returning from the outputted terahertz waves. The lens **120** outputs the received terahertz waves to the imaging chip **130**. For example, the lens **120** includes a silicone lens, more particularly, a hyper hemispherical silicone lens or a metamaterial lens.

[0045] The imaging chip **130** includes a terahertz detector. The imaging chip **130** generates a digital image signal depending on whether a terahertz wave signal outputted by the lens **120** and reflected and returning through a target such as a human body is present or not. The imaging chip **130** may include a terahertz detector formed of a complementary metal-oxide semiconductor (CMOS) or a Schottky barrier diode (SBD) terahertz detector. The imaging chip **130** outputs the generated digital image to the readout circuit **140**.

[0046] The readout circuit **140** reads out the digital image signal outputted from the imaging chip **130**. The readout circuit **140** outputs the read-out digital image signal to the transceiver **150**.

[0047] The transceiver **150** may be connected to an external device while being wireless or wired. When being connected by wires, the transceiver **150** outputs the digital image signal outputted by the readout circuit **140** to an output terminal such as a connecting line, a cable, and a wire. When being wirelessly connected, the transceiver **150** outputs the digital image signal as a wireless signal. For this, the transceiver **150** may be configured to support, for example, Bluetooth, wireless local area network (WLAN), wireless personal area network (WPAN), etc. However, the transceiver **150** may be configured to have various communication functions in addition to the described manners to be connected to external devices.

[0048] Also, the transceiver **150** may receive a control signal for controlling operations of the terahertz health checker **100** from the outside.

[0049] The power supply circuit **160** supplies power for allowing the terahertz health checker **100** to operate. For this, the power supply circuit **160** includes a power supply unit **161**.

[0050] The power supply unit **161** includes a battery, etc. for supplying power and provides the power supply circuit **160** with operating power. On the other hand, when receiving external power, the power supply unit **161** may provide the power supply circuit **160** with the external power.

[0051] The power supply circuit **160** provides the terahertz wave transmitter **110**, the imaging chip **130**, the readout circuit **140**, and the transceiver **150** with the operating power.

[0052] In this case, for miniaturization, the terahertz health checker **100** does not include a signal processor (not shown) for processing a digital image signal. For this, a function of the signal processor may be included in a mobile device of a user.

[0053] FIG. **2** is a view illustrating an external shape of the terahertz health checker **100**.

[0054] Referring to FIG. **2**, the terahertz health checker **100** is connected to a smart phone **10** via a connecting line **11**.

[0055] Referring to FIG. **1**, the terahertz health checker **100** includes the terahertz wave transmitter **110**, the lens **120**, the imaging chip **130**, the readout circuit **140**, the transceiver **150**, and the power supply circuit **160**.

[0056] The terahertz wave transmitter **110** outputs generated terahertz waves to the lens **120**. In this case, the terahertz wave transmitter **110** may be formed in the imaging chip **130**, which will be shown as an example.

[0057] The lens **120**, in order to minimize an effect of a surface wave and to increase detection performance of the terahertz health checker **100**, is formed of an extended hyper hemispherical silicone lens, for example, whose diameter is about 15 mm

[0058] The imaging chip **130** is aligned based on a center of the lens **120**. An antenna for receiving a terahertz wave signal at the imaging chip **130** is an on-chip antenna and is extended through the lens **120**. The imaging chip **130** includes a terahertz detector configured to have high input impedance within a range from about 500 to about 1000 Ω for broadband conjugation impedance matching. The imaging chip **130** outputs an obtained digital image to the readout circuit **140**.

[0059] The readout circuit **140** reads out a digital image signal from the imaging chip **130** and outputs the read-out digital image signal to the transceiver **150**.

[0060] The transceiver **150** outputs the digital image signal to an external device **10**, for example, a smart phone through the connecting line **11**.

[0061] The power supply circuit **160** supplies power supplied from the power supply unit **161** formed of two batteries to the terahertz wave transmitter **110**, the imaging chip **130**, the readout circuit **140**, and the transceiver **150**. The power supply circuit **160** may be connected to a power control button for turning on/off operation of the terahertz health checker **100**.

[0062] In this case, the smart phone **10** may include a signal processor for processing the digital image signal. In this case, the signal processor may obtain desired information from the digital image signal. The smart phone **10** may output the obtained information via a display unit by using the signal processor.

[0063] Also, the smart phone **10** may receive a control command for controlling the operation of the terahertz health checker **100** from a user and may output a control signal corresponding to the control command to the terahertz health checker **100** through the connecting line **11**.

[0064] FIG. **3** is a view illustrating a terahertz health checker **200** according to another embodiment of the present invention.

[0065] Referring to FIG. **3**, the terahertz health checker **200** includes a multiple camera module **210**, an imaging chip **220**, a readout circuit **230**, a signal processor **240**, a display module **250**, a transceiver **260**, and a power supply circuit **270**.

[0066] The multiple camera module **210** includes a lens unit **210***a* and a camera unit **210***b*. In this case, the lens unit **210***a* is distinguished only to describe input/output of various signals and may be included in the camera unit **210***b*.

[0067] The lens unit **210***a* includes a first lens **2111**, a second lens **2121**, a third lens **2131**, a fourth lens **2141**, and a fifth lens **2151**.

[0068] The camera unit **210***b* includes a millimeter wave transmitter **2112**, a millimeter wave camera **2113**, a video camera **2122**, a terahertz wave transmitter **2132**, a terahertz wave photoelectronic device **2133**, an infrared camera **2142**, and an ultraviolet camera **2152**. The first lens **2111** outputs millimeter waves or receives millimeter waves reflected and returning. The first lens **2111** outputs inputted millimeter waves to the millimeter wave camera **2113**.

[0069] The second lens **2121** receives visible rays. The second lens **2121** outputs inputted visible rays to the video camera **2122**.

[0070] The third lens **2131** outputs terahertz waves or receives terahertz waves reflected and returning. The third lens **2131** outputs inputted terahertz waves to the terahertz wave photoelectronic device **2133**.

[0071] The fourth lens **2141** receives infrared rays. The fourth lens **2141** outputs inputted infrared rays to the infrared camera **2142**.

[0072] The fifth lens **2151** receives ultraviolet rays. The fifth lens **2151** outputs inputted ultraviolet rays to the ultraviolet camera **2152**.

[0073] The camera unit **210***b* includes the millimeter wave transmitter **2112**, the millimeter wave camera **2113**, the video camera **2122**, the terahertz wave transmitter **2132**, the terahertz wave photoelectronic device **2133**, the infrared camera **2142**, and the ultraviolet camera **2152**.

[0074] The millimeter transmitter **2112**, in response to a millimeter wave selection signal, generates millimeter waves in a millimeter wave band. As an example, millimeter waves are electronic waves at from about 30 to about 300 gigahertz (GHz) and have a wavelength of from about 1 to about 10 mm. The millimeter transmitter **2112** outputs generated millimeter waves through the first lens **2111**.

[0075] The millimeter wave camera **2113**, in response to the millimeter wave selection signal, detects millimeter waves inputted through the first lens **2111**. The millimeter wave camera **2113** outputs the inputted millimeter waves to the imaging chip **220**.

[0076] The video camera **2122**, in response to a visible ray selection signal, receives visible rays inputted through the second lens **2121**. The video camera **2122** outputs the received visible rays to the imaging chip **220**.

[0077] Terahertz wave transmitter **2132**, in response to a terahertz wave selection signal, generates terahertz waves. Terahertz wave transmitter **2132** outputs the generated terahertz waves through the third lens **2131**. Also, the terahertz wave transmitter **2132** time-delays and outputs some of the generated terahertz waves to a terahertz wave detector of the imaging chip **220**. Through this, the terahertz wave transmitter **2132** may allow a signal of transmitted terahertz waves and a signal of received terahertz waves to be compared with each other inside the imaging chip **220**.

[0078] The terahertz wave photoelectronic device **2133**, in response to the terahertz wave selection signal, receives terahertz waves received through the third lens **2131**. The terahertz wave photoelectronic device **2133** outputs the received terahertz waves to the imaging chip **220**.

[0079] The infrared camera **2142**, in response to an infrared ray selection signal, receives infrared rays inputted through the fourth lens **2141**. The infrared camera **2142** outputs the received infrared rays to the imaging chip **220**.

[0080] The ultraviolet camera **2152**, in response to an ultraviolet ray selection signal, receives ultraviolet rays inputted through the fifth lens **2151**. The ultraviolet camera **2152** outputs the received ultraviolet rays to the imaging chip **220**.

[0081] The imaging chip **220** may receive signals having various waveforms and may composite detected images by using the received signals. In this case, the imaging chip **220** may generate a digital image signal with respect to the detected image based on a signal received through a target to be detected, for example, a human body. Particularly, with respect to terahertz waves, the imaging chip **220** generates a digital image signal depending on whether a terahertz wave signal reflected and returning through a target to be detected, for example, a human body. The imaging chip **220** may composite digital image signals generated with respect to at least some of millimeter waves, visible rays, terahertz waves, infrared rays, and ultraviolet rays.

[0082] Also, the imaging chip **220** may include a terahertz detector formed of a CMOS or an SBD terahertz detector. The imaging chip **220** outputs a generated digital image to the readout circuit **230**.

[0083] The readout circuit **230** reads out the digital image signal outputted from the imaging chip **220**. The readout circuit **230** outputs the read-out digital image signal to the signal processor **240**.

[0084] The signal processor **240** processes the digital image signal outputted from the imaging chip **220**. Through this, the signal processor **240** may process the digital image signal in two manners. As one manner, the signal processor **240**, when the digital image signal has an image shape, synchronizes the digital image signal with a spectrum image. The signal processor **240** may perform a signal processing operation for combining a video image with a terahertz image and may use data previously stored. As another manner, the signal processor **240**, when the digital image has a spectrum shape, may obtain a spectroscope image. The signal processor **240** may analyze a waveform using the spectroscope image. For this, the signal processor **240** may perform operations related to calculation, alignment, Fourier transform, spectrum analysis, spectrum response comparison, and correlation.

[0085] The signal processor **240** may include a memory (not shown) to process the digital image signal and may use data previously stored in the memory. The signal processor **240** outputs a signal-processed digital image to the display module **250**.

[0086] Also, the signal processor **240** may output the signal-processed digital image to the transceiver **260**.

[0087] The display module **250** may output the digital image signal-processed by the signal processor **240** via a display screen.

[0088] The transceiver **260** may be connected to an external device while being wireless or wired. When being connected while being wired, the spectroscope image is outputted to an output terminal such as a connecting line, a cable, wires, etc. While being connected wirelessly, the transceiver **260** outputs the signal-processed digital image using a wireless signal. For this, the transceiver **260** may be configured to support, for example, Bluetooth, a WLAN, a WPAN, etc. However, the transceiver **260** may be configured to have

various communication functions in addition to the described manners to be connected to external devices.

[0089] On the other hand, when the connected device includes functions of the signal processor **240**, the transceiver **260** may receive a digital image signal from the readout circuit **230** and may output the digital image signal to the external device.

[0090] Also, the transceiver **260** may receive a control signal for controlling operations of the terahertz health checker **200** from the external device.

[0091] The power supply circuit **270** supplies power for allowing the terahertz health checker **200** to operate. For this, the power supply circuit **270** includes a power supply unit **271**.

[0092] The power supply unit **271** includes a battery, etc. for supplying power and provides the power supply circuit **270** with operating power. On the other hand, when receiving external power, the power supply unit **271** may provide the power supply circuit **270** with the external power.

[0093] The power supply circuit **270** provides the multiple camera unit **210**, the imaging chip **220**, the readout circuit **230**, the signal processor **240**, the display module **250**, and the transceiver **260** with the operating power.

[0094] The imaging chips **130** and **220** included in the terahertz health checkers **100** and **200** shown in FIGS. **1** and **3**, respectively, may determine a case, in which terahertz waves are reflected and return, as a digital signal **1** and may determine a case, in which terahertz waves do not return, as a digital signal 0.

[0095] For this, the terahertz health checkers **100** and **200** may obtain digital images using whether terahertz waves returning from a detection area, to which terahertz waves are emitted, are present or not. In this case, the digital image may be formed of 0 and 1 and is allowed to include information on various health statuses of the detection area.

[0096] Accordingly, the terahertz health checkers **100** and **200** may check a health status by analyzing the detected digital image using an external device such as a smart phone and a personal computer or by processing the detected digital image using a signal processor built therein.

[0097] FIG. **4** is a view illustrating one side of the terahertz health checker **200**.

[0098] Referring to FIG. **4**, the terahertz health checker **200** may be configured to have a shape allowing the power supply unit **271**, that is, a battery to be inserted into a grip. In this case, the terahertz health checker **200** includes the first to fifth lenses **2111** to **2151** in a front portion thereof. In this case, the first lens **2111** receives millimeter waves, the second lens **2121** receives visible rays, and the third lens **2131** receives terahertz waves. Also, the fourth lens **2141** receives infrared rays, and the fifth lens **2151** receives ultraviolet rays.

[0099] The terahertz health checker **200** includes a terahertz wave button **213**.

[0100] The terahertz wave selection button **213** is for a detection using terahertz waves. When the terahertz wave selection button **213** is pushed, a terahertz wave selection signal is generated. The terahertz wave selection signal generated by the terahertz wave selection button **213** is provided to the terahertz wave transmitter **2132** and the terahertz wave photoelectronic device **2133**.

[0101] FIG. **5** is a view illustrating another side of the terahertz health checker **200**.

[0102] Referring to FIG. **5**, the terahertz health checker **200** includes a display screen **251** of the display module **250**. The display module **250** outputs a signal-processed digital image via the display screen **251**.

[0103] The terahertz health checker **200** includes a millimeter wave selection button **211**, a visible ray selection button **212**, an infrared ray selection button **214**, and an ultraviolet ray selection button **215**.

[0104] The millimeter wave selection button **211** is for detecting a target to be detected by using millimeter waves. When the millimeter wave selection button **211** is pushed, a millimeter wave selection signal is generated. The millimeter wave selection signal generated by the millimeter wave selection button **211** is provided to the millimeter wave transmitter **2112** and the millimeter wave camera **2113**.

[0105] The visible ray selection button **212** is for detecting a target to be detected by using visible rays. When the visible ray selection button **212** is pushed, a visible ray selection signal is generated. The visible ray selection signal generated by the visible ray selection button **212** is provided to the video camera **2122**.

[0106] The infrared ray selection button **214** is for detecting a target to be detected by using infrared rays. When the infrared ray selection button **214** is pushed, an infrared ray selection signal is generated. The infrared ray selection signal generated by the infrared ray selection button **214** is provided to the infrared camera **2142**.

[0107] The ultraviolet ray selection button **215** is for detecting a target to be detected by using ultraviolet rays. When the ultraviolet ray selection button **215** is pushed, an ultraviolet ray selection signal is generated. The ultraviolet ray selection signal generated by the ultraviolet ray selection button **215** is provided to the ultraviolet camera **2152**.

[0108] FIG. **6** is a view illustrating an imaging chip **300** according to an embodiment of the present invention.

[0109] Referring to FIG. **6**, the imaging chip **300** includes a terahertz wave detector **310**, a first field programmable gate array (FPGA) **320**, a row selection circuitry **330**, a second FPGA **340**, a column selection circuitry **350**, a differential cascade **360**, an offset compensation circuitry **370**, a sample hold amplifier **380**, and an analog/digital (A/D) converter **390**.

[0110] The terahertz wave detector **310** detects a plurality of terahertz wave signals inputted through a lens.

[0111] The first FPGA **320** programs and stores a matrix. The first FPGA **320** generates a row address by using information on the programmed matrix. As an example, the first FPGA **320** may generate a row selection address 0-31 of 32 bits. The first FPGA **320** outputs the generated row selection address to the row selection circuitry **330**.

[0112] The row selection circuitry **330** selects row bits corresponding to the detected terahertz waves based on the row selection address. The row selection circuitry **330** outputs the selected row bits to the differential cascade **360**.

[0113] The second FPGA **340** programs and stores a matrix. The second FPGA **340** generates a column address by using information on the programmed matrix. As an example, the second FPGA **340** may generate a column selection address 0-31 of 32 bits. The second FPGA **340** outputs the generated column selection address to the column selection circuitry **350**.

[0114] The column selection circuitry **350** selects column bits corresponding to the detected terahertz waves based on the column selection address. The column selection circuitry

350, for example, may be formed of 5 bits. A single column of the column selection circuitry **350** is biased toward time.

[0115] The differential cascade **360** is biased by a voltage of an antenna common node. The single column is biased toward time by the column selection circuitry **350**. Through this, the differential cascade **360** matches the detected terahertz waves with the row bits and outputs the same to the column selection circuitry **350**. The differential cascade **360**, for example, selects a single pixel capable of being buffered by a single gain amplifier, that is, the sample hold amplifier **380** having a gain band of about 0.4 megahertz (MHz). For example, the differential cascade **360** may perform parallel processing of 1024 pixels while activating the single column formed of 32 bits.

[0116] The offset compensation circuitry **370** compensates an offset of a signal according to detecting terahertz waves by using the differential cascade **360**.

[0117] On the other hand, the column selection circuitry **350** matches a detection signal matched with the row bits with a column signal and outputs the same to the sample hold amplifier **380**.

[0118] The sample hold amplifier **380** amplifies and outputs a signal outputted through the column selection circuitry **350** to the A/D converter **390**. In response to external control, when a switching off signal is inputted, the sample hold amplifier **380** stores the switching off signal, and when a switching on signal is inputted, the sample hold amplifier **380** outputs the switching on signal to the A/D converter **390**.

[0119] The sample hold amplifier **380** includes an amplifier **381**, a first gain controller **382**, and a second gain controller **383**.

[0120] The amplifier **381** amplifies an inputted signal and outputs the amplified signal to the A/D converter **390**.

[0121] The first gain controller **382** is connected to one of input terminals of the amplifier **381** and controls gains.

[0122] The second gain controller **383** is connected between an output of the first gain controller **382** and an output of the amplifier **381** and controls gains.

[0123] The A/D converter **390** converts the signal amplified by the sample hold amplifier **380** into a digital signal and outputs the digital signal.

[0124] FIG. **7** is a view illustrating an imaging chip **400** according to another embodiment of the present invention.

[0125] Referring to FIG. **7**, the imaging chip **400** includes a terahertz wave detector **410**, a current mirror circuit **420**, a first FPGA **430**, a column address decoder **440**, a second FPGA **450**, a row address decoder **460**, an analog multiplexer **470**, and a serial-parallel mode controller **480**.

[0126] In this case, the imaging chip **400** includes a terahertz wave detector **410** formed of a CMOS SBD.

[0127] The terahertz wave detector **410** detects a plurality of terahertz waves inputted through a lens. The terahertz wave detector **410** may be formed of a shape connecting a plurality of terahertz wave detecting devices **411**, **412**, . . . , and **41***n*.

[0128] A terahertz wave detecting device **411** includes an antenna **4111**, a switch S**1**, a capacitor C**1**, and a Shottky diode D**1**.

[0129] The antenna **4111** receives a terahertz wave signal inputted through the lens.

[0130] The switch S**1** switches according to a column selection signal outputted from the column address decoder **440**. The switch S**1** may be formed of a transistor, and a gate thereof receives the column selection signal through a first buffer B**1** connected to the column address decoder **440**. A source of the switch S**1** is connected to a contact point between one end of the capacitor C**1** and an anode of the Shottky diode D**1**. A drain of the switch **51** receives a current signal Ibias outputted from the current mirror circuit **420**.

[0131] The one end of the capacitor C**1** is connected to a contact point between the source of the switch S**1** and the anode of the Shottky diode D**1** and another is grounded.

[0132] The anode of the Shottky diode D**1** is connected to the one end of the capacitor C**1** and receives a signal detected by the antenna **4111**. A cathode of the Shottky diode D**1** is connected to an input terminal of the row address decoder **460** and outputs a voltage signal Vsig according to terahertz detection.

[0133] The current mirror circuit **420** receives a reference current Iref, generates a plurality of current signals Ibias having same current values from the reference current Iref, and outputs the plurality of current signals Ibias to the plurality of terahertz wave detecting devices **411**, **412**, and **41***n*, respectively. Through this, the current mirror circuit **420** provides the terahertz wave detector **410** with the current signals Ibias for detecting terahertz waves.

[0134] The first FPGA **430** programs and stores a matrix. The first FPGA **430** generates a column selection address by using information on the programmed matrix. As an example, the first FPGA **430** may generate a column selection address 0-31 of 32 bits. The first FPGA **430** outputs the generated column selection address to the column address decoder **440**.

[0135] The column address decoder **440** selects column bits corresponding to detected terahertz waves based on the column selection address. Information on the selected column bits is outputted to each of the terahertz wave detecting devices **411**, **412**, . . . , and **41***n* through a plurality of buffers B**1**, . . . , and Bn connected to the column address decoder **440**.

[0136] The second FPGA **450** programs and stores a matrix. The second FPGA **450** generates a row selection address by using information on the programmed matrix. As an example, the second FPGA **450** may generate a row selection address 0-31 of 32 bits. The second FPGA **450** outputs the generated row selection address to the row address decoder **460**.

[0137] The row address decoder **460** matches a signal Vsig outputted from the terahertz wave detector **410** according to inputted row selection address with selected row selection address and outputs the same to a plurality of amplifiers A**1**, . . . , and An. In this case, the signal outputted from the terahertz wave detector **410** is a signal selected and outputted according to the row selection address. In a serial mode, an image output operates with small noise. In a parallel mode, the image output operates at a high speed.

[0138] The analog multiplexer **470** combines signals outputted through the amplifiers A**1**, . . . , and An and operates in one of a serial mode and a parallel mode. In the serial mode, the analog multiplexer **470** is combined with the amplifiers A**1**, . . . , and An and connects all inputs of the amplifiers A**1**, . . . , and An to a pixel whose address is selected.

[0139] Through this, the analog multiplexer **470** multiplexes and outputs the detected terahertz waves.

[0140] The serial-parallel mode controller **480** may provide the row address decoder **460** and the analog multiplexer **470** with a mode control signal for controlling to operate in one of a serial mode and a parallel mode.

[0141] The imaging chips **300** and **400** shown in FIGS. **6** and **7** may be used as the imaging chips **130** and **220** shown in FIGS. **1** to **3**.

[0142] Also, the imaging chips **300** and **400** decode a detected signal based on a column and row with respect to a detection area, thereby allowing the terahertz health checkers **100** and **200** to obtain a digital signal having an image shape using detected terahertz waves.

[0143] FIG. **8** is a view illustrating operations of using the terahertz health checker.

[0144] Referring to FIG. **8**, in **510**, a pulse and temperature of a patient are checked using the terahertz health checker.

[0145] In **520**, a fracture is checked using the terahertz health checker. In **530**, teeth and skin are checked using the terahertz health checker.

[0146] In **540**, breasts of a patient are checked using the terahertz health checker.

[0147] In FIG. **8**, there are shown examples of using the terahertz health checker. In addition thereto, the terahertz health checker may be used to check various statuses of patients or nonpatients.

[0148] The terahertz health checker according to the present embodiment has measurement performance with high resolution by image-scattering a detected signal by using terahertz waves. Also, the terahertz health checker may digitally image a detection signal by using terahertz waves, thereby having a miniaturized size.

[0149] The above-disclosed subject matter is to be considered illustrative, and not restrictive, and the appended claims are intended to cover all such modifications, enhancements, and other embodiments, which fall within the true spirit and scope of the present invention. Thus, to the maximum extent allowed by law, the scope of the present invention is to be determined by the broadest permissible interpretation of the following claims and their equivalents, and shall not be restricted or limited by the foregoing detailed description.

What is claimed is:

1. A terahertz health checker comprising:
- a terahertz wave transmitter generating terahertz waves in a terahertz band;
- a lens outputting the terahertz waves and receiving terahertz waves reflected from the outputted terahertz waves;
- an imaging chip connected to the lens, detecting the received terahertz waves, and generating a digital image signal based on the detected terahertz waves;
- a readout circuit reading out the digital image signal; and
- a transceiver outputting the read-out digital image signal to the outside.

2. The terahertz health checker of claim **1**, wherein the digital image signal is an image-shaped signal formed of digital signals 0 and 1 depending on whether terahertz waves detected from a detection area of the outputted terahertz waves are present or not.

3. The terahertz health checker of claim **1**, further comprising a power supply circuit for supplying operating power to the terahertz transmitter, the imaging chip, the readout circuit, and the transceiver.

4. The terahertz health checker of claim **1**, further comprising:
- a millimeter wave generator for generating and transmitting a millimeter wave;
- a lens outputting the generated millimeter wave and receiving millimeter wave corresponding to the outputted millimeter wave; and
- a millimeter wave camera outputting the received millimeter wave to the imaging chip.

5. The terahertz health checker of claim **1**, further comprising:
- a lens for receiving visible rays; and
- a video camera outputting the received visible rays to the imaging chip.

6. The terahertz health checker of claim **1**, further comprising:
- a lens for receiving infrared rays; and
- an infrared camera outputting the received infrared rays to the imaging chip.

7. The terahertz health checker of claim **1**, further comprising:
- a lens for receiving ultraviolet rays; and
- an ultraviolet camera outputting the received ultraviolet rays to the imaging chip.

8. The terahertz health checker of claim **1**, further comprising:
- a signal processor processing the digital image signal; and
- a display module displaying the signal-processed digital image signal.

9. The terahertz health checker of claim **1**, wherein the imaging chip comprises:
- a first field programmable gate array (FPGA) generating a row address;
- a row selection circuitry generating row bits using the row address;
- a terahertz wave detector detecting the terahertz waves;
- a differential cascade matching the detected terahertz waves with the row bits and outputting the same;
- a second FPGA generating a column address;
- a column selection circuitry generating column bits using the column address, matching the terahertz waves matched with the row bits with the column bits, and output the same;
- a sample hold amplifier amplifying a terahertz wave signal matched with the column bits and row bits and outputting the amplified signal using a holding operation according to an external control signal; and
- an A/D converter converting the amplified signal into a digital signal and outputting the digital signal.

10. The terahertz health checker of claim **9**, wherein the imaging chip further comprises an offset compensation circuitry compensating the differential cascade with an offset of the detected terahertz wave signal.

11. The terahertz health checker of claim **1**, wherein the imaging chip comprises:
- a first FPGA generating a column address;
- a column address decoder generating a column selection address using the column address;
- a current mirror circuit receiving a reference current and providing a current signal for detecting terahertz waves;
- a terahertz wave detector detecting the received terahertz waves based on the current signal and the column selection address;
- a second FPGA generating a row address;
- a row address decoder generating a row selection address using the row address and outputting the detected terahertz waves using the row selection address;
- an analog multiplexer multiplexing and outputting the outputted terahertz waves by operating in one of a serial mode and a parallel mode; and
- a serial-parallel mode controller controlling operations of the row address decoder and the analog multiplexer as one of the serial mode and parallel mode.

12. The terahertz health checker of claim **11**, wherein the terahertz wave detector comprises a plurality of terahertz wave detecting devices,

wherein the terahertz wave detecting device comprises:

an antenna detecting the terahertz waves;

a switch receiving the current signal through a drain and operating according to the column selection address inputted through a gate;

a capacitor whose one end is connected to a source of the switch and another is grounded; and

a Shottky diode whose anode is connected to a contact point between the one end of the capacitor and an output of the antenna, the Shottky diode outputting the terahertz waves detected by the antenna through a cathode thereof.

13. The terahertz health checker of claim **12**, wherein the imaging chip further comprises:

a plurality of buffers providing the terahertz wave detecting devices with outputs of the column address decoder, respectively; and

a plurality of amplifiers amplifying a plurality of outputs of the row address decoder.

14. A terahertz health checker comprising:

a lens receiving terahertz waves;

an imaging chip connected to the lens, detecting the received terahertz waves, and generating a digital image signal based on the detected terahertz waves; and

a readout circuit reading out the digital image signal,

wherein the imaging chip comprises:

a first FPGA generating a row address;

a row selection circuitry generating row bits using the row address;

a terahertz wave detector detecting the terahertz waves;

a differential cascade matching the detected terahertz waves with the row bits and outputting the same;

a second FPGA generating a column address;

a column selection circuitry generating column bits using the column address, matching the terahertz waves matched with the row bits with the column bits, and output the same;

a sample hold amplifier amplifying a terahertz wave signal matched with the column bits and row bits and outputting the amplified signal using a holding operation according to an external control signal; and

an A/D converter converting the amplified signal into a digital signal and outputting the digital signal.

15. The terahertz health checker of claim **14**, wherein the digital image signal is an image-shaped signal formed of digital signals 0 and 1 depending on whether terahertz waves detected from a detection area of the outputted terahertz waves are present or not.

16. The terahertz health checker of claim **14**, wherein the imaging chip further comprises an offset compensation circuitry compensating the differential cascade with an offset of the detected terahertz wave signal.

17. A terahertz health checker comprising:

a lens receiving terahertz waves;

an imaging chip connected to the lens, detecting the received terahertz waves, and generating a digital image signal based on the detected terahertz waves; and

a readout circuit reading out the digital image signal,

wherein the imaging chip comprises:

a first FPGA generating a column address;

a column address decoder generating a column selection address using the column address;

a current mirror circuit receiving a reference current and providing a current signal for detecting terahertz waves;

a terahertz wave detector detecting the received terahertz waves based on the current signal and the column selection address;

a second FPGA generating a row address;

a row address decoder generating a row selection address using the row address and outputting the detected terahertz waves using the row selection address;

an analog multiplexer multiplexing and outputting the outputted terahertz waves by operating in one of a serial mode and a parallel mode; and

a serial-parallel mode controller controlling operations of the row address decoder and the analog multiplexer as one of the serial mode and parallel mode.

18. The terahertz health checker of claim **17**, wherein the digital image signal is an image-shaped signal formed of digital signals **0** and **1** depending on whether terahertz waves detected from a detection area of the outputted terahertz waves are present or not.

19. The terahertz health checker of claim **17**, wherein the terahertz wave detector comprises a plurality of terahertz wave detecting devices,

wherein the terahertz wave detecting device comprises:

an antenna detecting the terahertz waves;

a switch receiving the current signal through a drain and operating according to the column selection address inputted through a gate;

a capacitor whose one end is connected to a source of the switch and another is grounded; and

a Shottky diode whose anode is connected to a contact point between the one end of the capacitor and an output of the antenna, the Shottky diode outputting the terahertz waves detected by the antenna through a cathode thereof.

20. The terahertz health checker of claim **17**, wherein the imaging chip further comprises:

a plurality of buffers providing the terahertz wave detecting devices with outputs of the column address decoder, respectively; and

a plurality of amplifiers amplifying a plurality of outputs of the row address decoder.

* * * * *