PRINTING ASSEMBLY CONTROLLED BY ELECTRIC PULSES

Filed Feb. 8, 1967

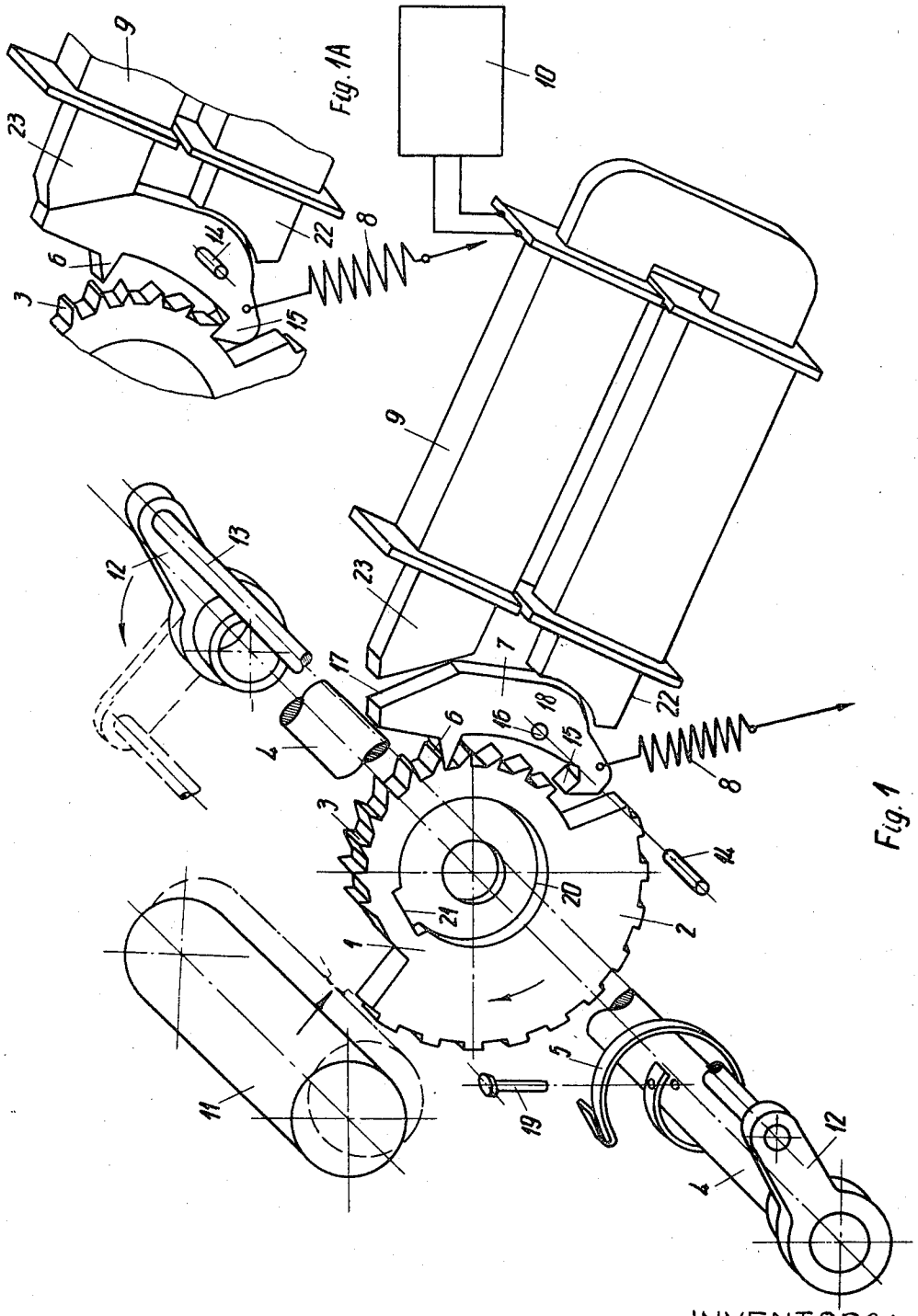

INVENTORS:
Stefan Todorov BAKARDJIEV
Ivan Tenev STANTCHEV
Lubomir Iordanov ANTONOV
by: Arthur O. Klein, their Attorney

PRINTING ASSEMBLY CONTROLLED BY ELECTRIC PULSES

Filed Feb. 8, 1967

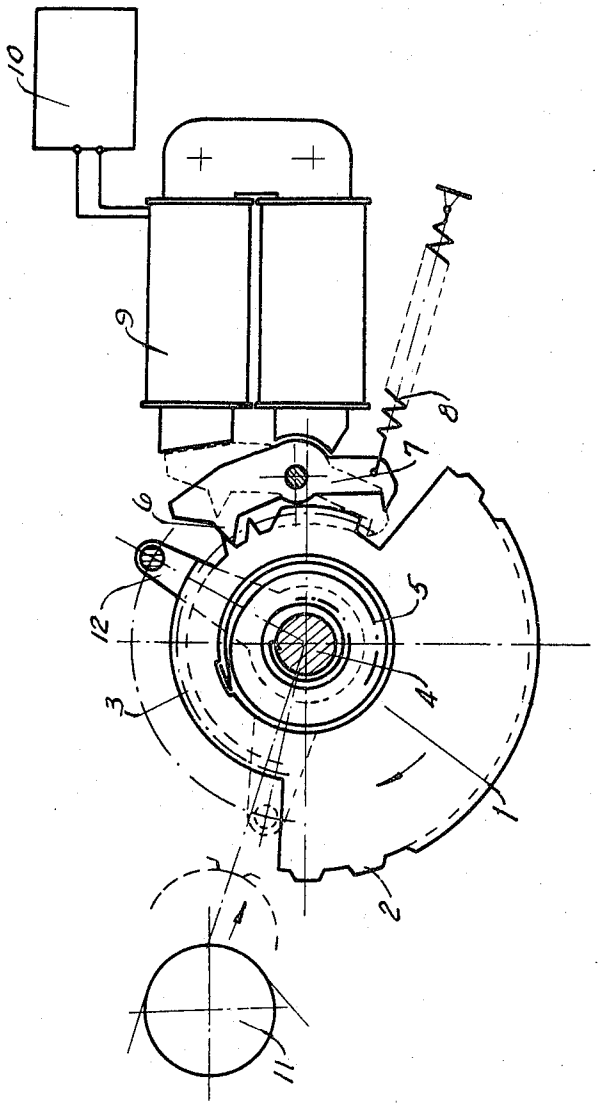

Fig. 2

INVENTORS:
Stefan Todorov BAKARDJIEV
Ivan Tenev STANTCHEV
BY: Lubomir Iordanov ANTONOV
Arthur O. Klein
their Attorney

United States Patent Office

3,422,754

Patented Jan. 21, 1969

1

3,422,754
PRINTING ASSEMBLY CONTROLLED BY ELECTRIC PULSES

Stefan T. Bakardjiev, Ivan Tenev Stantchev, and Dubomir Iordanov Antonov, Sofia, Bulgaria, assignors to Zentralen Institut Po Iztchislitelna Technika, Sofia, Bulgaria, a firm

Filed Feb. 8, 1967, Ser. No. 615,016
Claims priority, application Bulgaria, Mar. 9, 1966, I-217
U.S. Cl. 101—79 7 Claims
Int. Cl. B41j *45/00, 1/60*

ABSTRACT OF THE DISCLOSURE

A printing assembly wherein a rotary printing member and a rotary ratchet member are connected to each other for rotation together about a given axis so as to locate a selected one of a series of printing types, which are angularly distributed along a peripheral portion of the printing member, at a printing position, upon turning of the members around this axis from a predetermined starting position. The ratchet member has a series of ratchet teeth corresponding to the number of printing types which are angularly distributed along the peripheral portion of the printing member. An armature, which has the configuration of a pawl, coacts with the teeth of the ratchet member to control the stepping of the latter together with the printing member around the axis of rotation thereof. A spring urges the printing member to turn from the starting position so as to locate a selected type at the printing location. An electromagnetic means coacts with the armature to oscillate the latter so as to control the stepping of the printing member by the number of pulses transmitted to the electromagnetic means, this number of pulses corresponding to the number of oscillations of the pawl so as to control the number of steps through which the printing member turns to locate a selected type at the printing position.

The present invention relates to printing assemblies. In particular, the present invention relates to that type of printing assembly where a rotary printing member has a peripheral portion provided with a plurality of angularly distributed types, a selected one of which is to be located at a printing position.

Devices of the aforedescribed general type are known and are, for example, described in U.S. Patents, Nos. 3,156,181 and 3,173,359.

While devices of the above general type are known for locating selected types at a printing location, in one type of known construction electric pulses not only serve to control the movement of the printing member, but in addition the electrical energy is used for driving the printing member, so that relatively strong electric pulses are required, resulting in complex and expensive pulse generators.

There are also known constructions where the electrical controls for displacing a selected type to the printing position are separate from the driving structure which drives the printing member, but with this type of construction the selection is controlled by a light fixing element which coacts with the electric pulses, resulting also in a complex arrangement. This latter type of construction requires a system for synchronizing the movement of the printing member with the operation of the electric pulse generator, so that a complex pulse generator is required, and this latter type of structure has frequent service problems.

It is accordingly a primary object of the present invention to provide a printing assembly of the above general type which will avoid the above drawbacks.

2

In particular, it is an object of the present invention to provide a printing assembly in which the selection of a given printing type is controlled by electric pulses while the printing member itself is driven from a separate source.

It is also an object of the invention to provide an exceedingly simple, compact structure which will operate very reliably to produce the desired results.

With the structure of the invention a rotary printing member has a peripheral portion provided with a series of printing types which are angularly distributed at the peripheral portion of the printing member around the turning axis thereof, a suitable support means being provided to support the printing member for rotary movement about this axis. A ratchet member is fixed to the printing member for rotation therewith, and the ratchet member has a series of ratchet teeth also angularly distributed about the latter axis and corresponding to the series of printing types. A spring means coacts with one of these members for turning both of them about the latter axis so as to locate a selected printing type at the printing position. An armature is provided, this armature having the construction of a pawl which coacts with the ratchet teeth to control the stepping of the printing member by the force of the spring means, and an electromagnetic means cooperates with the armature for oscillating the latter so as to control the stepping of the printing member in accordance with the pulses received by the electromagnetic means. In this way a selected type will be located at a printing position.

The invention is illustrated by way of example in the accompanying drawing which forms part of this application and in which:

FIG. 1 is an exploded perspective illustration of one of a series of assemblies according to the invention; and

FIG. 1A shows part of the structure of FIG. 1 in a different position.

FIG. 2 illustrates diagrammatically in plan view the device illustrated in FIGS. 1 and 1A.

Referring now to the drawing, there is shown in FIG. 1 a rotary printing member **2** and a rotary ratchet member **3** fixed to the member **2** for rotation therewith. The members **2** and **3** are integrally connected with each other, are located in a common plane, and form a single plate **1**. This plate is formed with an opening through which the common turning axis of the members **2** and **3** extends, and a stationary shaft **4** extends through this opening and forms a support means for the plate **1**, the latter being freely turnable on the shaft **4**, so that in this way the integrally connected printing member **2** and ratchet member **3** are capable of turning as a unit about the axis of the shaft **4**. The printing member **2** has at its outer periphery a series of angularly displaced types which are angularly distributed about the axis of the shaft **4**, while the ratchet member **3** is angularly displaced with respect to the entire printing member **2** and has its ratchet teeth also angularly distributed about the axis of the shaft **4**. The number of ratchet teeth of course correspond to the number of printing types, and the angular positions of the ratchet teeth correspond to the angular positions of the printing types, so that in this way it will become possible, in a manner described in greater detail below, to locate a selected printing type at a printing position which is shown in phantom lines in the drawing.

A spring means **5** is operatively connected with the plate **1**, so that in this way it is connected to one of the members **2** or **3**, and this spring means **5** acts to turn the members **2** and **3** from a predetermined starting position to a position where a selected one of the types of the printing member **2** will be located in a printing position. In the illustrated example the plate **1** is formed in

a side surface thereof with an annular recess **20** surrounding the shaft **4**, and the spring **5** is in the form of a spiral spring situated within this recess and having its inner end fixed to the stationary shaft **4**. The outer end of the spiral spring **5** is fixed to the plate **1** in a notch **21** thereof which communicates with the outer periphery of the annular recess in which the spring **5** is situated, as indicated diagrammatically in FIGS. 1 and 1A, so that with this construction the spring **5** seeks to turn the plate **1** in a clockwise direction, as indicated by the arrow in the drawing. The inner end of spring **5** is fixed to shaft **4** by a pin **19**.

The structure of the invention includes an armature **7** in the form of a pawl supported for swinging movement about an axis parallel to the shaft **4** and having an upper tooth **6** which coacts with the ratchet teeth of the ratchet member **3** in the manner shown in the drawing. A second spring means **8** coacts with the pawl **7** to turn the latter to a position which will locate the pawl tooth **6** in engagement with one of the ratchet teeth so as to prevent turning of the plate **1** by the spring **5**. An electromagnetic means **9** coacts with the pawl **7** for oscillating the latter, and in the position of the parts shown in FIG. 1 the electromagnetic means is unenergized so that the spring **8** locates the tooth **6** in engagement with one of the ratchet teeth. When the electromagnetic means **9** is energized it will swing the armature **7** in a clockwise direction, in opposition to the spring **8**, to the dotted line position shown in FIG. 2 and the position shown in solid lines in FIG. 1A, with the result that the pawl tooth **6** will be displaced away from the ratchet so that the spring **5** can turn the plate **1**. The electromagnetic means **9** is controlled with low power pulses received from a generator **10**, and in the short time intervals between the pulses the spring **8** returns the pawl **7** to the position thereof shown in FIG. 1, so that in response to a given number of pulses delivered to the electromagnetic means **9** by the generator **10** the pawl **7** will be oscillated a given number of times, thus causing the plate **1** to be stepped around the shaft **4** a number of times which will locate a selected one of the types of the printing member **2** at the printing position shown in phantom lines in the drawing. Thus, the spring **5** will turn the plate **1** through an angle corresponding to the number of pulses received by the electromagnetic means **9**, and in this way a selected type will be located at the printing location.

Thus, the movement of plate **1** is controlled by the flat, U-shaped electromagnet **9** which swings the armature **7** which acts as a pawl and which is in the form of an escapement anchor. This armature **7** rocks about a stationary pin **14** which is received in an opening **16** of pawl **7** and which has its axis parallel to the axis of the shaft **4**.

In order to keep losses at a minimum in the electromagnetic field at the clearance between the armature **7** and the pole **22** of magnet **9**, the pawl **7** has a portion **18** in the configuration of an arc of a circle whose center is in the axis of the pin **14**. In order to achieve a maximum turning moment about the pin **14**, the upper end of the pawl **7** is inclined at an appropriate angle so that the pawl **7** has at this region an inclined surface **17** which lies flush against the end of the pole **23** when the magnet **9** is energized.

The escapement type of pawl **7** has a pair of teeth **6** and **15** which alternately coact with the teeth of the ratchet **3**. The spring **8** acts to maintain the tooth **6** of the pawl **7** in engagement with a ratchet tooth when the electromagnet **9** is unenergized, so as to prevent further turning of the plate **1** by the spring **5**. When the electromagnet **9** is energized, however, the pawl **7** is swung in a clockwise direction in opposition to the spring **8** to the position shown in FIG. 1A, so that the tooth **6** moves away from the ratchet teeth and the spring **5** turns the plate through half the distance between a pair of adjacent ratchet teeth because the tooth **15** of the pawl **7** engages a ratchet tooth. In the short interval prior to the next impulse the spring **8** disengages the tooth **15** from the ratchet and swings the pawl **7** back to its initial position so that the tooth **6** will engage the next ratchet tooth, and in this way each impulse sequence of two successive pulses provides a movement of the plate **1** through a distance from one ratchet tooth to the next ratchet tooth so that the rotary printing member is stepped through a distance equal to one printing type.

It will be noted that with this construction the plate **1** need not be very thick so that an exceedingly compact arrangement is provided with a series of structures as described above situated one next to the other, on the common shaft **4**, and thus a series of printing members **2** are located beside each other and can all be turned through selected angles respectively so as to locate a series of printing types in a horizontally aligned condition at the printing position. Because of the compact structure of the invention all of the printing assemblies can be located one directly next to each other, occupying a relatively small amount of space with the horizontally arranged printing types located at a convenient distance from each other.

After all of the plates **1** have been turned to the selected angular positions respectively so that a horizontal series of printing types carried by the horizontally arranged printing members **2** are all located at the printing position, the platen or roller **11** will displace the paper together with a tape of a suitable color against the printing elements which are in the printing positions, so that the impressions thereof will be transferred to the paper.

The above operations are repeated to carry out a series of printing operations. A return means is provided for returning all of the plates **1** to predetermined starting positions where they are all angularly aligned, and this return means takes the form of bail **12** having a pair of arms turnable on a shaft **4** and extending radially therefrom and interconnected by a rod **13** which extends parallel to the shaft **4** and which is shown fragmentarily in FIG. 1. Thus, the rod of the bail **12** will, upon turning of the bail **12** in a counter-clockwise direction in a known way, as indicated in the drawing, engage the shoulder formed by a substantially radial edge at one end of the printing member **2**, where this latter end joins the adjacent end of the ratchet member **3**, so that in this way the return means formed by the bail **12** will act on the plate **1** to return the printing and ratchet members to their predetermined starting position. It will be noted that during this return movement of the assembly to its starting position the spiral spring means **5** is wound up in preparation for the next operation. The return means **12** is actuated by an electromechanical drive which acts on the return means **12** to provide for the latter a single swinging movement around the shaft **4** in order to return the entire series of printing assemblies which are carried by the shaft **4** simultaneously to their starting positions.

What is claimed is:

1. In a printing assembly, a rotary printing member having a predetermined axis of rotation and having an outer peripheral portion carrying a series of types which are angularly distributed about said axis, support means supporting said printing member for rotary movement about said axis, a toothed ratchet member fixed to said rotary printing member for rotary movement therewith and having a plurality of ratchet teeth respectively corresponding to said types and also angularly distributed about said axis, spring means operatively connected to one of said members for urging them from a predetermined starting position about said axis to a position which will locate a selected type at a printing position, an armature having the construction of a pawl member and coacting with said teeth of said ratchet member for stepping said printing member around said axis in response to the force exerted on said printing member by said spring means until said selected type is located at said printing position and electromagnetic means for receiving a selected number of pulses and coacting with said pawl member

for oscillating the latter with respect to said ratchet member until the selected type is located at said printing position, a second spring means coacting with said pawl member for urging the latter into engagement with said ratchet member to prevent turning of the latter and said printing member by said first-mentioned spring means, said second spring means turning said pawl member in one direction and said electromagnetic means turning said pawl member in opposition to said second spring means in an opposite direction to provide the oscillations of said pawl member in accordance with the number of pulses delivered to said electromagnetic means so as to displace a selected type to the printing position.

2. The combination of claim **1** and wherein a return means coacts with the interconnected printing and ratchet members for returning them to said starting position after a selected type has been located at said printing position.

3. The combination of claim **1** and wherein said printing and ratchet members are integrally connected to each other.

4. The combination of claim **3** and wherein said printing member and ratchet member are located in a common plane with said ratchet member angularly displaced with respect to said printing member.

5. The combination of claim **4** and wherein said printing member and ratchet member together form a single plate, said plate being formed with an opening through which said axis extends, and said support means including a shaft around which said printing and ratchet members are turnable, said plate being formed in one side surface with a recess surrounding said shaft, and said first-mentioned spring means being situated in said recess and connected to said shaft and plate for urging the latter to turn in a direction which will displace a selected type to said printing position.

6. The combination of claim **5** and wherein said printing member has a larger radius than said ratchet member and projects radially beyond the latter defining with said ratchet member, at one end of the latter and at one end of said printing member, a substantially radial shoulder, and return means coacting with said shoulder for turning said plate in opposition to said first-mentioned spring means to said starting position after a selected printing member has been located at said printing position.

7. The combination of claim **1** and wherein said pawl member is in the form of an escapement anchor turnable about an axis parallel to the axis of rotation of said printing member and having a pair of teeth alternately coacting with the teeth of said ratchet member for indexing the latter, said pawl member having an arcuate surface portion extending along a circle whose center is in the turning axis of said pawl member and said electromagnetic means having one pole terminating in a concave arcuate end face located closely adjacent to said arcuate surface portion of said pawl member, said pawl member having spaced from said arcuate surface portion thereof an inclined straight surface portion and said electromagnetic means having a second pole terminating in a straight end face which has a flush engagement with said inclined straight surface portion of said pawl member when said electromagnetic means is energized.

References Cited

UNITED STATES PATENTS

1,195,992	8/1916	Joline	101—19
1,978,330	10/1934	Schultes	101—28
2,417,865	3/1947	Douglass	101—7
2,576,041	11/1951	Pitts	101—99
3,019,724	2/1962	Hoffmann	101—7
3,156,181	11/1964	Dubin	101—110
3,173,359	3/1965	Turner	101—100
3,269,510	8/1966	Peters	101—18 X

WILLIAM B. PENN, *Primary Examiner.*

U.S. Cl. X.R.

101—99, 110