April 22, 1930. F. FISCHER ET AL 1,755,390

ELECTRICAL SPARK CONTROL FOR BURNERS

Filed July 6, 1926 2 Sheets-Sheet 1

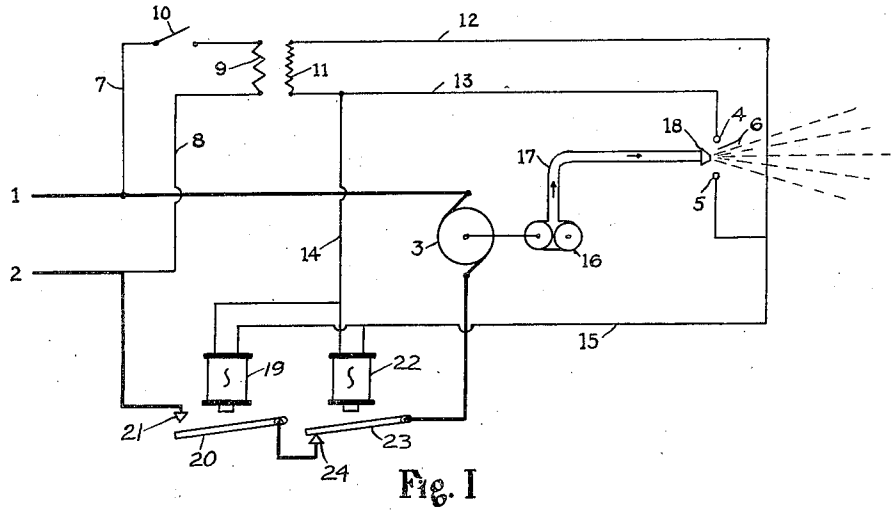

Fig. I

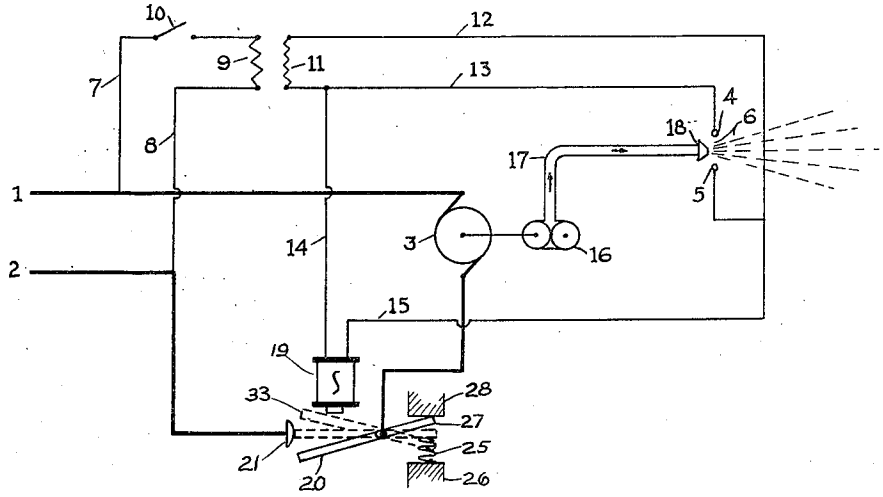

Fig. II

INVENTOR

Frank Fischer

Arnold F. Van Pelt

April 22, 1930. F. FISCHER ET AL 1,755,390

ELECTRICAL SPARK CONTROL FOR BURNERS

Filed July 6, 1926 2 Sheets-Sheet 2

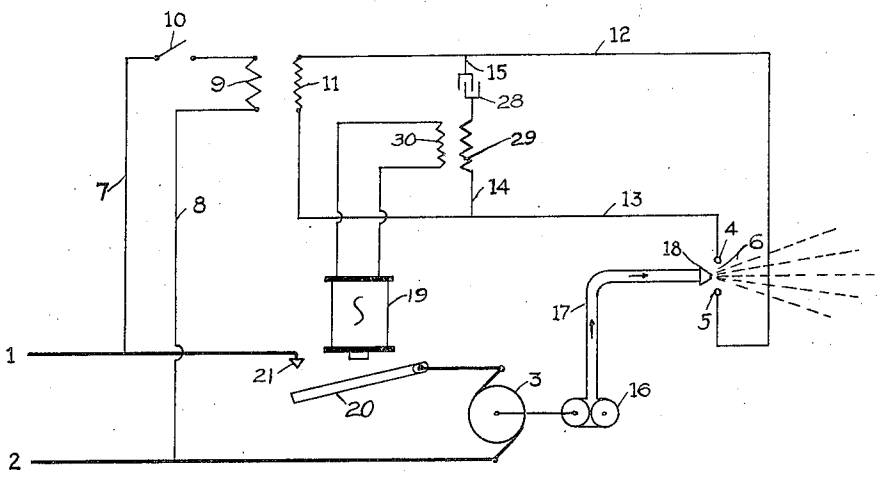

Fig. III

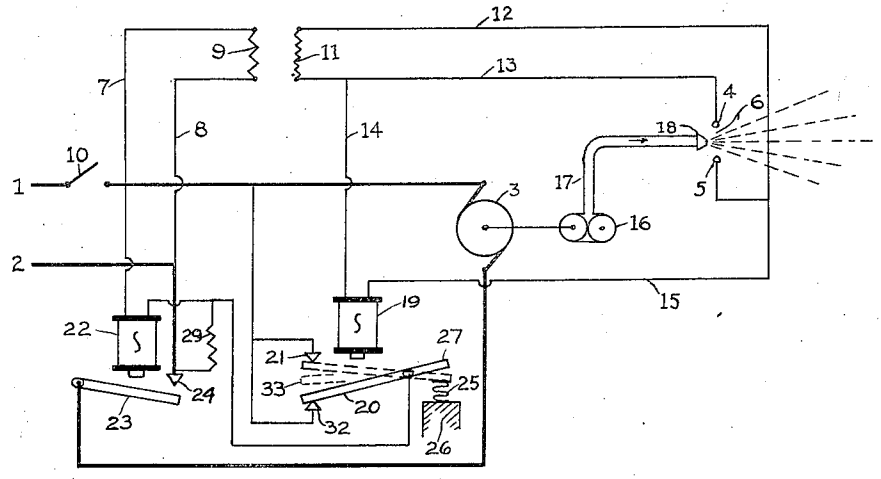

Fig. IV

INVENTOR

Frank Fischer
Arnold H. Van Pelt

Patented Apr. 22, 1930 1,755,390

UNITED STATES PATENT OFFICE

FRANK FISCHER, OF RYE, NEW YORK, AND ARNOLD F. VAN PELT, OF INTERLAKEN, NEW JERSEY, ASSIGNORS TO GRANT OIL BURNER CORPORATION, OF WILMINGTON, DELAWARE, A CORPORATION OF DELAWARE

ELECTRICAL SPARK CONTROL FOR BURNERS

Application filed July 6, 1926. Serial No. 120,855.

Our invention relates to safety ignition means for burners, and pertains particularly to an arrangement whereby an electrical spark of suitable intensity must be present in order to permit operation of the burner.

It is a comparatively simple matter to prevent operation of a burner unless a current is flowing through the ignition circuit, but such an arrangement would not shut down the burner in the case of a short circuit of the spark gap; or in case a thin spark (of insufficient intensity to ignite the burner) were obtained.

One of the objects of our invention is to prevent injecting fuel into the combustion chamber unless an ignition spark of required intensity is present at the electrodes.

Another object is to obtain a suitable ignition spark prior to the starting of the fuel-supply motor.

Another object is to shut down the burner in case the ignition spark should fail while the burner is in operation.

Other objects will hereinafter appear.

The nature and scope of our invention are more thoroughly explained in the following description taken in connection with the accompanying drawings forming part of this specification, in which:

Fig. I is a diagram of our spark control circuit in which two relays, actuated by different voltages, are connected in parallel across the spark-gap so as to open and close the main motor circuit.

Fig. II is a diagram similar to Fig. I, except that only one relay instead of two is employed—the armature of this relay having three positions to which it is moved in accordance with the magnitude of the impressed voltage.

Fig. III is a circuit similar to Fig. II but having a relay with a single contact armature, and receiving its current from a secondary transformer coil, the primary coil of which forms an inductive resistance which is connected in series with a condenser across the spark gap.

Fig. IV shows another means of closing or opening the motor circuit through the presence or absence respectively, of a spark-producing potential across the electrodes. In this arrangement two relays and a resistance are employed—one relay being connected in parallel across the spark gap, and the other relay and a resistance in series with each other being connected in a shunt circuit around the motor.

Similar numerals refer to similar parts in all of the figures, in which:

1 and 2 are alternating current power leads, 3 is a motor, 4 and 5 are electrodes separated by spark-gap 6. 7 and 8 are wires connecting the ignition transformer primary coil 9 in parallel across leads 1 and 2 when switch 10 is closed. Switch 10 represents either a manually operated switch or any type of thermostat or automatic switch for closing and opening the circuit.

In the adaptation shown, the air and oil pump 16 is driven by motor 3 and discharges a combustible mixture of oil and air through conduit 17 and nozzle 18 into the firebox of the furnace.

The ignition transformer secondary coil 11 is connected by means of wires 12 and 13 to said electrodes 4 and 5. 14 and 15 are wires connecting relay-coil 19 directly in parallel with the secondary of the ignition transformer as shown in Figs. I, II and IV. The slight difference in Fig. III will be explained later. 20 is the armature actuated by relay-coil 19, and 21 is a contact point with which 20 contacts to connect armature 20 to one of the main power-leads 1 or 2.

22, in Figs. I and IV, represent additional relays having armatures 23 and contact points 24 arranged in series with the motor circuit.

25 (Figs. II and IV) is a spring mounted on rigid support 26. Spring 25 is of such height as not to contact with the extension arm 27 of armature 20 when coil 19 is de-energized, or until armature 20 reaches its central position indicated by point 21 in Fig. II and by central position indicated by dotted lines 33 in Fig. IV. When armature 20 is pulled to its extreme upward position spring 25 is compressed, thereby offering increased resistance to the movement of armature 20 as it is raised above its central position.

In Fig. II the upward movement of the extension arm 27 is stopped by contact with rigid stop 28.

29 (Fig. IV) is a non-inductive resistance in series with relay-coil 22, the purpose of which is to permit relay-coil 22 to be shunted out of the circuit without excessive current flowing in the shunting circuit. Relay-coil 22 is shunted out of the circuit when armature 20 is making contact with point 32 or point 21.

In Fig. III relay-coil 19 is connected in parallel with the secondary 30 of a special transformer, the primary 29 of which is connected in series with condenser 28. Wires 14 and 15 in this figure convey energy from wires 13 and 12 to primary 29 and condenser 28 and indirectly through secondary 30 to relay-coil 19, instead of directly as in Figs. I, II and IV.

The operation of our electrical spark control for burners is as follows:

The power current is always presumed to be on lines 1 and 2.

When the control switch 10 is closed the primary coil 9 of ignition transformer is energized. This energizes the high-tension secondary coil 11 producing a voltage of say 10,000 volts which normally causes a spark to jump across the spark gap 6 between the electrodes 4 and 5.

After a suitable ignition spark is produced and a current flow established in the secondary circuit, the initial voltage, which was required to break down the gap resistance, is reduced by virtue of the voltage drop within the transformer. When the proper spark is passing through the electrodes there exists a potential difference between wires 12 and 13; and relay-coil 19 is energized by said potential difference. Relay-coil 19 is so wound as to lift armature 20 when thus energized, and thereby to bring about connection of motor 3 across the main power-leads 1 and 2.

Referring to Fig. I for illustration, relay-coil 19 is designed to operate only from a source of supply, the potential difference of which is equal to the potential difference existing across the spark-gap when the proper spark is flowing.

Relay-coil 22 in Fig. I is designed to operate from a source of supply, the potential difference of which is very high, as for instance, from the secondary of the ignition transformer when the spark-gap is too widely spaced and hence offers a resistance too great for the available potential to break down. A continued condition as just noted, will result in the relay 22 being actuated and thereby breaking the main motor circuit at contact point 24. Armature 23 is therefore in contact with point 24 under all conditions except when the potential difference between wires 12 and 13 is considerably higher than it would be if a spark were passing between electrodes 4 and 5.

It should be noted that if electrodes 4 and 5 are short-circuited, the potential difference between wires 12 and 13 drops to practically zero. The potential difference between wires 12 and 13 increases from zero to a maximum (depending upon the design of the transformer) as gap 6, between electrodes 4 and 5, is increased. Armature 20 is therefore only in contact with point 21 when a definite minimum potential between 12 and 13 has been passed, and armature 20 is held in contact with point 21 for all potentials existing between 12 and 13 above a definite fixed minimum value.

If there exists no potential difference between 12 and 13 either by reason of the ignition transformer not being energized or a short circuit existing on the secondary, the main circuit of motor 3 will be open at the contact points of relay 19.

If a predetermined proper potential exists between 12 and 13 (equivalent to the potential existing when a proper spark producing current is flowing between electrodes 4 and 5 across gap 6) the main circuit of motor 3 will be closed through contact points at both relays.

If an excessive potential (anything above a predetermined limit) exists between 12 and 13, circuit of motor 3, while closed at contact points of relay 19, will be open at contact points of relay 22.

Fig. II shows an arrangement with a single relay 19 connected to wires 12 and 13, said wires being connected to the secondary of the ignition transformer. This relay is designed to respond to two different potentials. The first potential is that existing across wires 12 and 13 when a spark of the proper intensity is passing between electrodes 4 and 5 across gap 6. When responding to such a potential the armature of 20 is lifted up to its central position, determined by initial contact with spring 25, thereby making contact with point 21 and thus completing the circuit of motor 3.

The second potential to which relay 19 is responsive is that existing between wires 12 and 13 when the ignition transformer is energized, but when electrodes 4 and 5 are so widely spaced that there is not sufficient current flow across gap 6 to establish a spark suitable for ignition purposes. When relay-coil 19 is subjected to this second potential, armature 20 is raised to its extreme position, as shown by dotted line 33, thereby opening main circuit of motor 3.

In Fig. III a single relay-coil 19 is used which obtains its energy from the secondary 30 of a special transformer, primary 29 of which is connected in series with a suitable condenser 28, both of which latter are connected by wires 14 and 15 to wires 13 and 12.

The design of primary coil 29 and condenser

28 are such as to preclude any current flow through themselves when subject to a potential of a frequency of approximately 60 cycles. However, 29 and 28 are responsive to a frequency considerably higher than 60 cycles and, when subject to said higher frequency, induce sufficient current in secondary coil 30 to energize relay-coil 19, thus closing motor circuit 3 through armature 20 at point 21.

An inspection of Fig. III will show that the circuit comprised of condenser 28, wire 15, wire 12, electrode 5, spark-gap 6, electrode 4, wire 14 and coil 29, will oscillate at a much higher frequency than 60 cycles when an ignition-spark is present at the gap. The above circuit and relay 19 and secondary coil 30 have been so designed as to be responsive only to a frequency much higher than 60 cycles. This higher frequency is only present when a proper spark is flowing between electrodes 4 and 5 across gap 6, hence relay 19 and consequently motor 3 are in fact only responsive when a proper spark is flowing across gap 6.

Relay-coil 19 is only one of the means we have in mind for utilizing the energy from the spark circuit to close some of this circuit of motor 3. For instance, a vacuum or gas filled tube could well be adapted to receive the energy and act in a similar capacity to relay 19; or, such a tube could be arranged to receive the energy from the ignition means and actuate a second relay or a series of relays which would enable us to handle a motor of any capacity.

In Fig. IV a non-inductive resistance 29 with relay-coil 22 in series, are connected across the main power circuit 1 and 2 when switch 10 is closed. Relay-coil 22 is effectively shunted out of the circuit when armature 20 contacts with point 21 or with point 32, but relay-coil 22 is not shunted out and is therefore energized when armature 20 is in its central position at 33, which occurs only when relay-coil 19 is energized by the suitable potential which is present on wires 12 and 13 when a proper ignition spark is passing across gap 6 between electrodes 4 and 5. It will be seen that when relay-coil 19 is not energized, relay-coil 22 is shunted out, and likewise when relay-coil 19 is energized to an excessive value relay-coil 22 is again shunted out. It should be borne in mind that the circuit to motor 3 is open at all times unless relay-coil 22 is effectively energized.

Having described our invention, what we claim and desire to secure by Letters Patent is:

1. In a burner ignition device having a controlled circuit, a high voltage controlling circuit energized from a substantially constant potential, the controlling circuit having a pair of spaced electrodes forming a spark gap for igniting the burner, relay means for closing the controlled circuit when an ignition spark is present at the spark-gap and opening the controlled circuit when said ignition spark is absent, and a shunt circuit around the spark-gap for operating the relay means.

2. In a control mechanism for burners, a power circuit, a relay operated switch for opening and closing the power circuit, a transformer secondary circuit having a spark gap for igniting the burner, a shunt circuit connected around the spark gap, and means energized by said shunt circuit for closing the relay switch when the precise ignition-spark producing current flows across the gap.

FRANK FISCHER.
ARNOLD F. VAN PELT.