S. STUTZ.

ORE-JIGGERS.

No. 194,059. Patented Aug. 14, 1877.

Fig. 1.

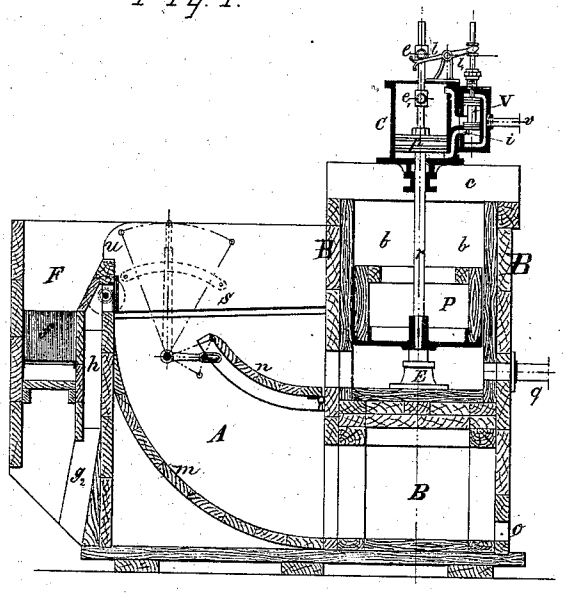

Fig. 2.

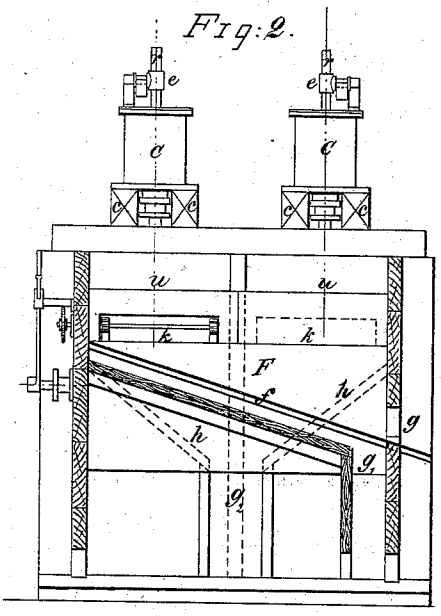

Fig. 3.

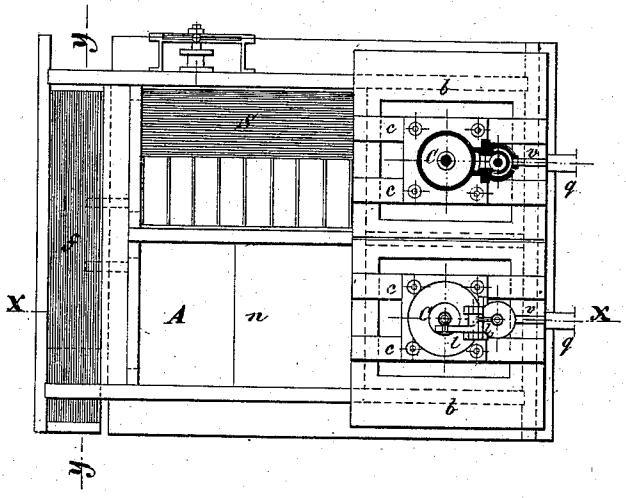

WITNESSES:

J. W. Thorne.

J. K. Hatfield

INVENTOR:

Sebastian Stutz

N. PETERS, PHOTO-LITHOGRAPHER, WASHINGTON, D. C.

UNITED STATES PATENT OFFICE.

SEBASTIAN STUTZ, OF PITTSBURG, PENNSYLVANIA.

IMPROVEMENT IN ORE-JIGGERS.

Specification forming part of Letters Patent No. **194,059**, dated August 14, 1877; application filed October 7, 1876.

To all whom it may concern:

Be it known that I, SEBASTIAN STUTZ, of Pittsburg, in the county of Allegheny and State of Pennsylvania, have invented new and useful Coal and Ore Washing or Separating Machinery; and I do hereby declare that the following is a full, clear, and exact description of the same, reference being had to the accompanying drawing, forming part of this specification, and of which—

Figure 1 represents a vertical section taken at *x x* of Fig. 3. Fig. 2 represents a vertical section taken at *y y* of Fig. 3, and a front view of the machinery. Fig. 3 represents a top view with a horizontal section through the steam-cylinder.

The combination and arrangement of the machinery differs from that shown in the application filed by me on the 11th day of April, 1876, in the following points:

The plunger-box B is provided with a movable lining, *b*, which can at any time be removed and replaced by a new one.

As a heavy piston is necessary to give the stroke, it wears the sides rapidly, requiring frequent repairs. The removable lining renders these repairs easy and inexpensive.

The box-shaped piston or plunger P, which, in the arrangement described by the application of April 11, 1876, is lifted upward by the mechanism of a differential cam, in the present case receives its movement directly by the action of steam. For this purpose a single-acting steam-cylinder, C, is adapted to the top of the movable box *b* by means of two cross-pieces, *c c*. V is the steam-valve; *v*, the inlet-pipe of the steam, and *p* is the piston of the steam-cylinder. The inlet of steam into the cylinder C is regulated through the valve V and the levers *l l*. A reciprocating movement is imparted to the latter by means of two drivers, *e e*, fixed at the upper end of the piston-rod *r*. As represented by Fig. 1 of the annexed drawing, both the piston *p* and the plunger P are in their lowest positions. They are fixed upon a common piston-rod, *r*. The valve V has been moved upward by the upper driver *e*, and the port *i* is open to allow the inlet of steam below the piston *p*. But before this latter has reached the end of its stroke the lower driver *e* will push the lever *l* upward, whereby the valve V is moved downward, and the escape of the steam from the inside of the cylinder C to the outside and above the piston *p* is free. The heavy plunger P is no longer sustained, and will drop down upon the body of water. The length of the stroke or the height of dropping down of the plunger P can be varied according to circumstances. This is done easily by fixing the upper driver *e* so that the valve V is moved down, in order to allow the escape of the steam before the piston *p* has reached its highest position. A buffer, E, provided with a steel or rubber spring, is fixed at the bottom of the movable box *b*, by which the downward movement of the plunger P is limited.

Below the sieve S, at the inside of the separator-box A, a curved partition, *m*, is added. This is done for greater convenince of cleaning out that part of the box from fine sulphur and slate, the mud sliding down more easily to the opening *o*, where its outlet is effected automatically, and in the same way as described in the application filed by me September 21, 1876, in the Patent Office. The pallet *n*, for directing the water upward to the sieve S, can be either stationary or movable.

The mechanism and arrangement for giving it different positions have been fully described in the above application of September 21, 1876, and needs no further explanation.

Another improvement of the separator consists in the insertion of a dry screen, *f*, into the channel F, and near the bottom of it. This is done to separate the water from the delivered material before the latter has reached the elevator-buckets. The material slides down upon the screen *f*, and comes through the opening *g* to the outside, while the water is let through the screen, and can escape by the opening *g*.

The arrangement of the channel *h* for the outlet of the stones or heavier material is also different from the preceding ones, as will be seen by the inspection of Fig. 2 of the annexed drawing. Thus the separator-box A is provided with three different delivery-openings, *g*, g^1, and g^2, one for the washed material, one for the water, and one for the heavier stones, &c.

The operation of the machinery is as fol-

lows: The material to be separated being brought upon the sieve S at the back end of the box A, is forwarded by the action of the water to the front, the lighter parts of it passing over the edge *u* into the channel F, where they slide down to the elevator, while the stones or heavier materials are let out from time to time by the opening *k* into the channel *h*, and fall to the outside of the separator through the opening g^2.

In order to obtain a good separation of the material, the upward movement of the plunger P has to be made very slow, so that only the fresh water coming in through the pipe *q* shall fill up the empty space below the plunger, and thereby prevent the suction of the water from the box A back again below the plunger, and allow the lifted-up material more time to settle down by its own gravity. The plunger moves downward upon the water with a sharp percussive action in order to produce a strong current for lifting up the entire layer of material upon the sieve.

Concerning the usefulness of the invention, it will be readily seen that the erection of separators, worked directly by steam, will be much cheaper than others worked by means of intermediate mechanisms. Besides this, both the speed as well as the stroke of the machinery can be regulated and varied according to the material which is to be separated. This is very important, as it allows the separation of the greatest quantity possible. By the addition of the curved partition *m* inside of the separator-box A, the cleaning is effected more easily, and thus time and money saved.

Having thus described my invention, what I claim as new is—

1. The box *b*, communicating with the separator-box A by a clear opening unprovided with a valve, and also communicating directly with the fresh-water supply through the pipe *q*, in combination with the box-shaped plunger P and the steam-cylinder C, with its steam-passages and valve-movement, as and for the purpose specified.

2. The boxes A B, provided with the curved partition M and the outlet *o*, substantially as described, for the purpose specified.

3. The combination of the stationary sieve S and water-chamber A with the dam *u*, passage F, and dry screen *f*, and with the passages *h*, g^2, and $g\ g^1$, substantially as described.

SEBASTIAN STUTZ.

Witnesses:
FRANK MCKENNY,
MELVILLE CHURCH.