Innovation, Sciences et Développement économique Canada
Office de la Propriété Intellectuelle du Canada

Innovation, Science and Economic Development Canada
Canadian Intellectual Property Office

CA 2771608 C 2018/11/20

(11)(21) 2 771 608

(12) BREVET CANADIEN
CANADIAN PATENT

(13) C

(22) Date de dépôt/Filing Date: 2012/03/19

(41) Mise à la disp. pub./Open to Public Insp.: 2012/09/22

(45) Date de délivrance/Issue Date: 2018/11/20

(30) Priorité/Priority: 2011/03/22 (US13/053,398)

(51) Cl.Int./Int.Cl. *F28F 1/00* (2006.01), *F16L 1/028* (2006.01), *F16L 9/19* (2006.01), *F28D 7/00* (2006.01), *F28F 23/00* (2006.01)

(72) Inventeur/Inventor:
YANG, TAI-HER, TW

(73) Propriétaire/Owner:
YANG, TAI-HER, TW

(74) Agent: GOWLING WLG (CANADA) LLP

(54) Titre : ELEMENT DE TUYAU MUNI D'UNE CONDUITE CENTRALE A ISOLANT THERMIQUE ET D'UNE CONDUITE EN " U "A REPARTITION ANNULAIRE

(54) Title: PIPE MEMBER EQUIPPED WITH HEAT INSULATION CORE PIPELINE AND U-SHAPED ANNULARLY-DISTRIBUTED PIPELINE

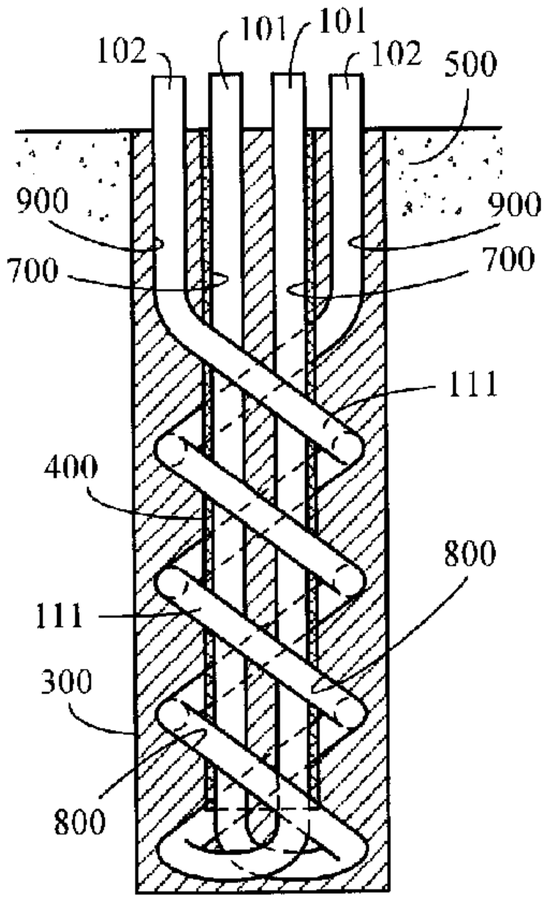

(57) Abrégé/Abstract:
The present invention relates to a U-type piping capable of thermal energy transmission with each other in a radiate arrangement, wherein the piping segments of the U-type fluid piping inlet end and/or outlet end of the U-type piping capable of thermal energy transmission with each other in the radiate arrangement are directly made of thermal insulating materials, or a thermal insulating structure is installed between the inlet end and the outlet end, and a thermal conductive body made of thermal conductive material is further installed thereof, so as to prevent thermal energy loss because of thermal conduction by temperature difference between adjacent piping segments with temperature difference of the inlet end and the outlet end installed on the same side when fluid with temperature difference passing through.

ABSTRACT

The present invention relates to a U-type piping capable of thermal energy transmission with each other in a radiate arrangement, wherein the piping segments of the U-type fluid piping inlet end and/or outlet end of the U-type piping capable of thermal energy transmission with each other in the radiate arrangement are directly made of thermal insulating materials, or a thermal insulating structure is installed between the inlet end and the outlet end, and a thermal conductive body made of thermal conductive material is further installed thereof, so as to prevent thermal energy loss because of thermal conduction by temperature difference between adjacent piping segments with temperature difference of the inlet end and the outlet end installed on the same side when fluid with temperature difference passing through.

TITLE: PIPE MEMBER EQUIPPED WITH HEAT INSULATION CORE PIPELINE AND U-SHAPED ANNULARLY-DISTRIBUTED PIPELINE

BACKGROUND OF THE INVENTION

(a) Field of the Invention

The present invention relates to a pipe member equipped with heat insulation core pipeline and U-shaped annularly-distributed pipeline for being installed within the thermal storage body (500) composed of natural thermal storage body, such as shallow surface of the earth, or pool, lake, river, ocean, or artificial objects in solid, or gaseous, or liquid state; wherein the pipe member equipped with heat insulation core pipeline and U-shaped annularly-distributed pipeline is constructed through that the piping segments of fluid inlet terminal and/or outlet terminal of the U-type core piping and loop piping are directly made of thermal insulating material, or thermal insulating structure is installed between the inlet terminal and the outlet terminal; so as to prevent thermal energy loss because of thermal conduction between adjacent piping segments of inlet terminal and outlet terminal on the same side when thermal conductive fluid with temperature difference passing through.

(b) Description of the Prior Art

Traditionally, thermal energy loss often occurs in U-type piping device of U-type piping heat exchanger, because of thermal conduction by temperature difference between adjacent piping segments of fluid inlet terminal and fluid outlet terminal installed on the same side when fluid with temperature difference passing through.

SUMMARY OF THE INVENTION

The present invention relates to a U-type pipeline capable of thermal energy transmission with each other in a radiate arrangement, wherein the

piping segments of the U-type fluid piping inlet end and/or outlet end of the U-type piping capable of thermal energy transmission with each other in the radiate arrangement are directly made of thermal insulating materials, or a thermal insulating structure is installed between the inlet end and the outlet end; and the above piping system is installed within the thermal conductive body made of thermal conductive material; so as to prevent thermal energy loss because of thermal conduction by temperature difference between adjacent piping segments with temperature difference of the inlet end and the outlet end installed on the same side when fluid with temperature difference passing through.

BRIEF DESCRIPTION OF THE DRAWINGS

FIG. 1 shows an embodiment of conventional U-type piping (100) installed within the thermal storage body (500);

FIG. 2 shows an embodiment of conventional U-type piping (100) installed within the columnar thermal conductive body (300), wherein the columnar thermal conductive body (300) is placed within the thermal storage body (500);

FIG. 3 is a schematic structural view showing that the multiple-route U-type spiral piping structure (800) having two or more than two routes is installed within the columnar thermal conductive body (300) , and spirally installed at the periphery of the columnar thermal conductive body (300), and the bottom is concentrated toward the center and connected to the first fluid inlet and outlet terminal (101) through the central piping segment of U-type spiral piping (700), and the outer periphery of the central piping segment of U-type spiral piping (700) of the multiple routes concentrated at the center is installed with the thermal insulating device (400), according to the present invention.

FIG. 4 is a section view of FIG. 3.

FIG. 5 is a schematic structural view showing that the U-type spiral

piping structure (800) having two or more than two routes is installed in the columnar thermal conductive body (300), and spirally arranged at the periphery of the columnar thermal conductive body (300), and the periphery of individual central piping segment of U-type spiral piping (700) of the multiple routes arranged at the center is installed with the thermal insulating device (400), according the present invention.

FIG. 6 is a section view of FIG. 5.

FIG. 7 is a schematic structural view showing that the U-type spiral piping structure (800) having two or more than two routes is installed in the columnar thermal conductive body (300) for being installed nearby the peripheral edge of the columnar thermal conductive body (300), the center of the columnar thermal conductive body (300) is installed with the common piping (200) with a larger diameter, the bottom of the multiple-route U-type spiral piping structure (800) is communicated with the bottom of the common piping (200), and the thermal insulating structure is installed at the outer periphery of the common piping (200), according to the present invention.

FIG. 8 is a section view of FIG. 7.

DESCRIPTION OF MAIN COMPONENT SYMBOLS

100：U-type piping

101：First fluid inlet and outlet terminal

102：Second fluid inlet and outlet terminal

111：Thermal conductive fluid

200：Common piping

300：Columnar thermal conductive body

400：Thermal insulating device

500：Thermal storage body

700：Central piping segment of U-type spiral piping

800：U-type spiral piping structure

900：Piping segment of the second fluid inlet and outlet terminal (102) of the U-type spiral piping structure (800)

1101：Shared first fluid inlet and outlet terminal

DETAILED DESCRIPTION OF THE PREFERED EMBODIMENTS

The present invention relates to a pipe member equipped with heat insulation core pipeline and U-shaped annularly-distributed pipeline for being installed within the thermal storage body (500) composed of natural thermal storage body, such as shallow surface of the earth, or pool, lake, river, ocean, or artificial objects in solid, or gaseous, or liquid state; wherein the pipe member equipped with heat insulation core pipeline and U-shaped annularly-distributed pipeline is constructed through that the piping segments of fluid inlet terminal and/or outlet terminal of the U-type core piping and loop piping are directly made of thermal insulating material, or thermal insulating structure is installed between the inlet terminal and the outlet terminal; so as to prevent thermal energy loss because of thermal conduction between adjacent piping segments of inlet terminal and outlet terminal on the same side when thermal conductive fluid with temperature difference passing through.

As for the pipe member equipped with heat insulation core pipeline and U-shaped annularly-distributed pipeline of the present invention, each of the U-type piping (100) is used for passing through one or more following thermal conductive fluid (111), including for passing through:

1) liquid state fluid;

2) gaseous state fluid;

3) liquid to gaseous state fluid; and

4) gaseous to liquid state fluid.

Traditionally, thermal energy loss often occurs in U-type piping device of U-type piping heat exchanger, because of thermal conduction by

temperature difference between adjacent piping segments of fluid inlet terminal and fluid outlet terminal installed on the same side when fluid with temperature difference passing through, which is illustrated by examples as followings:

FIG. 1 shows an embodiment of conventional U-type piping (100) installed within the thermal storage body (500); when the thermal conductive fluid (111) passing through the piping segment of the first fluid inlet and outlet terminal (101) and the adjacent piping segment of the second fluid inlet and outlet terminal (102) respectively installed on the same side of the U-type piping (100) are in temperature difference, the two piping segments will produce thermal conduction and therefore result in thermal energy loss.

FIG. 2 shows an embodiment of conventional U-type piping (100) installed within the columnar thermal conductive body (300), wherein the columnar thermal conductive body (300) is placed within the thermal storage body (500).

When the columnar thermal conductive body (300) is installed at the pipe member equipped with heat insulation core pipeline and U-shaped annularly-distributed pipeline of the thermal storage body (500) composed of natural thermal storage body, such as shallow surface of the earth, or pool, lake, river, ocean, etc, or artificial objects in solid, or gaseous, or liquid state, and the thermal conductive fluid (111) with temperature difference passes through the first fluid inlet and outlet terminal (101) and the second fluid inlet and outlet terminal (102) of the U-type piping, there will be thermal energy loss, because of thermal conduction between adjacent piping segments of the first fluid inlet and outlet terminal (101) and the second fluid inlet and outlet terminal (102) installed on the same side;

The present invention relates to a pipe member equipped with heat insulation core pipeline and U-shaped annularly-distributed pipeline for

being installed within the thermal storage body (500) composed of natural thermal storage body, such as shallow surface of the earth, or pool, lake, river, ocean, etc, or artificial objects in solid, or gaseous, or liquid state; wherein the pipe member equipped with heat insulation core pipeline and U-shaped annularly-distributed pipeline is constructed through that the piping segments of the U-type fluid piping inlet terminal and/or outlet terminal, which are radial U-type pipelines for passing thermal energy through each other, are directly made of thermal insulating material, or thermal insulating structure is installed between the inlet terminal and the outlet terminal; so as to prevent thermal energy loss because of thermal conduction between adjacent piping segments of inlet terminal and outlet terminal on the same side when thermal conductive fluid with temperature difference passing through.

FIG. 3 is a schematic structural view showing that the multiple-route U-type spiral piping structure (800) having two or more than two routes is installed within the columnar thermal conductive body (300) , and spirally installed at the periphery of the columnar thermal conductive body (300), and the bottom is concentrated toward the center and connected to the first fluid inlet and outlet terminal (101) through the central piping segment of U-type spiral piping (700), and the outer periphery of the central piping segment of U-type spiral piping (700) of the multiple routes concentrated at the center is installed with the thermal insulating device (400), according to the present invention.

FIG. 4 is a section view of FIG. 3

As shown in FIG. 3 and FIG. 4, it mainly consists of:

--Multiple-route U-type spiral piping: constituted by a U-type spiral piping structure (800) having two or more than two routes and allowing the thermal conductive fluid (111) to pass through, or by multiple sets of the U-type spiral piping structures (800) installed in the columnar thermal conductive body (300) composed of solid state or colloidal object; the

U-type spiral piping structure (800) in multiple-route is spirally and annularly installed near the peripheral edge of the columnar thermal conductive body (300), wherein the first fluid inlet and outlet terminal (101) of the U-type spiral piping structure (800) of each route is installed at the top of the spiral piping structure center, and is communicated with the bottom of the U-type spiral piping structure (800) of each route through the central piping segment of U-type spiral piping (700) of each route, and the second inlet and outlet terminal (102) of each route is installed at the top end of the U-type spiral piping structure (800) spirally up its own run via the piping segment (900) of the second fluid inlet and outlet terminal (102) of the U-type spiral piping structure (800) of each route;

--Thermal insulating device (400): related to a thermal insulating structure constituted by the followings with thermal insulating effects, such as solid, flexible body, or foam, or enveloped colloid, gas, or liquid, or vacuum structure; the U-type spiral piping structure (800) having two or more than two routes is installed in the columnar thermal conductive body (300), and the central piping segments of U-type spiral piping (700) of the multiple routes are concentrated in the columnar thermal conductive body (300) for upwardly connecting to the first fluid inlet and outlet terminal (101); the central piping segment of U-type spiral piping (700) is directly made of the thermal insulating material or sleeved with the thermal insulating material, or the periphery of the concentrated central piping segments of U-type spiral piping (700) of the multiple routes is installed with the thermal insulating structure (400), by way of the mentioned thermal insulating structure (400), the thermal energy loss caused by thermal conduction between the concentrated central piping segments of U-type spiral piping (700) of the multiple routes, and the U-type spiral piping structure (800) of each route, and the piping segment (900) of the second fluid inlet and outlet terminal (102) of the U-type

spiral piping structure (800) of each route is substantially reduced;

The structure includes one or more than one of the following structural states:

1) Piping structure assembly: which is provided with the multiple-route U-type spiral piping composed of the U-type spiral piping structure (800) having two or more than two routes and the piping segment (900) of the second fluid inlet and outlet terminal (102) of the U-type spiral piping structure (800), and the central piping segment of U-type spiral piping (700) of each route is concentrated adjacent installed at the axial center, and the thermal insulating device (400) is installed at the periphery of the central piping segment of U-type spiral piping (700), or the central piping segment of U-type spiral piping (700) of each route is directly made of thermal insulating material, so as to configure the piping structure assembly;

2) Columnar structure enveloped by the columnar thermal conductive body (300): which is provided with the columnar thermal conductive body (300) made of the thermal conductive material in various geometric cross section shapes such as round, oval, square, rectangular, or star-like shapes, for being served to envelope the U-type spiral piping structure (800) having two more or than two routes and the piping segment (900) of the second fluid inlet and outlet terminal (102) of the U-type spiral piping structure (800), and to envelope the thermal insulating device (400) installed at the periphery of the central piping segments of U-type spiral piping (700) concentrated adjacent installed at the axial center, so as to configure the columnar structure enveloped by the columnar thermal conductive body (300) (as shown in FIG. 3 and FIG. 4); or the periphery of individual central piping segment of U-type spiral piping (700) of the multiple routes concentrated adjacent installed at the axial center is respectively installed with the thermal insulating device (400), or the individual

central piping segment of U-type spiral piping (700) is directly made of the thermal insulating material, so as to configure the columnar structure enveloped by the columnar thermal conductive body (300) (as shown in FIG. 5, which is a schematic structural view showing that the U-type spiral piping structure (800) having two or more than two routes is installed in the columnar thermal conductive body (300), and spirally arranged at the periphery of the columnar thermal conductive body (300), and the periphery of individual central piping segment of U-type spiral piping (700) of the multiple routes arranged at the center is installed with the thermal insulating device (400), according the present invention; and FIG. 6 is a section view of FIG. 5);

3) Columnar structure utilizing the columnar thermal conductive body (300) having piping therein as the structure member: which is directly made of the columnar thermal conductive body (300), and configured in the structural state having piping therein for being installed with the multiple-route spiral piping composed of the U-type spiral piping structure (800) having two or more than two routes, including the piping segment (900) of the second fluid inlet and outlet terminal (102) of the U-type spiral piping structure (800), the central piping segments of U-type spiral piping (700) of each route which connects to the first fluid inlet and outlet terminal (101) being concentrated adjacent installed at the axial center, and the thermal insulating device (400) installed at the periphery of the central piping segment of U-type spiral piping (700), so as to configure the columnar structure utilizing the columnar thermal conductive body (300) having piping therein as the structure member.

FIG. 7 is a schematic structural view showing that the U-type spiral piping structure (800) having two or more than two routes is installed in the columnar thermal conductive body (300) for being installed nearby the peripheral edge of the columnar thermal conductive body (300), the center

of the columnar thermal conductive body (300) is installed with the common piping (200) with a larger diameter, the bottom of the multiple-route U-type spiral piping structure (800) is communicated with the bottom of the common piping (200), and the thermal insulating structure is installed at the outer periphery of the common piping (200), according to the present invention.

FIG. 8 is a section view of FIG. 7.

As shown in FIG. 7 and FIG. 8, it mainly consists of:

--Multiple-route U-type spiral piping: constituted by the U-type spiral piping structure (800) having two or more than two routes and allowing the thermal conductive fluid (111) to pass through, or by multiple sets of the U-type spiral piping structures (800) installed in the columnar thermal conductive body (300) composed of solid state or colloidal object; the U-type spiral piping structure (800) in multiple-route is spirally and annularly installed at the periphery of the columnar thermal conductive body (300), and each route has the piping segment (900) of the second fluid inlet and outlet terminal (102) of the U-type spiral piping structure (800) for connecting to the corresponding second fluid inlet and outlet terminal (102), and the bottom of the U-type spiral piping structure (800) of each route is communicated to the common piping (200), and the common piping (200) is installed at the center of the U-type spiral piping structure (800), and the top thereof is connected to the shared first fluid inlet and outlet terminal (1101);

--Thermal insulating device (400): related to a thermal insulating structure constituted by the followings with thermal insulating effects, such as solid, flexible body, or foam, or enveloped colloid, gas, or liquid, or vacuum structure; the U-type spiral piping structure (800) of each route is installed in the columnar thermal conductive body (300), and the common piping (200) is installed at the axial center of the columnar thermal conductive body (300), and the top thereof is connected to the

shared first fluid inlet and outlet terminal (1101), and the piping segment of the common piping (200) of the U-type spiral piping is directly made of the thermal insulating material or sleeved with the thermal insulating material, or the thermal insulating structure (400) is installed between the U-type spiral piping structure (800) of each route and the piping segment (900) of the second fluid inlet and outlet terminal (102) of the U-type spiral piping structure (800) of each route, and the piping segment of the common piping (200) of the U-type spiral piping, by way of the mentioned thermal insulating structure (400), the thermal energy loss caused by thermal conduction between the common piping (200), and the U-type spiral piping structure (800) and the piping segment (900) of the second fluid inlet and outlet terminal (102) of the U-type spiral piping structure (800) of each route is substantially reduced;

The structure includes one or more than one of the following structural states:

1) Piping structure assembly: which is provided with the multiple-route U-type spiral piping composed of the U-type spiral piping structure (800) having two or more than two routes and the piping segment (900) of the second fluid inlet and outlet terminal (102) of the U-type spiral piping structure (800), and the common piping (200) allowing the bottom of the U-type spiral piping structure (800) of each route to be communicated to, and the shared first fluid inlet and outlet terminal (1101) enabling the common piping (200) to upwardly connected to, and the thermal insulation device (400) installed on the common piping (200), or the common piping (200) directly made of thermal insulating material, so as to configure the piping structure assembly;

2) Columnar structure enveloped by the columnar thermal conductive body (300): which is provided with the columnar thermal conductive body (300) made of the thermal conductive material in various geometric cross section shapes such as round, oval, square, rectangular,

or star-like shapes, for being served to envelope the multiple-route U-type spiral piping composed of the U-type spiral piping structure (800) having two more or than two routes and the piping segment (900) of the second fluid inlet and outlet terminal (102) of the U-type spiral piping structure (800), and to envelope the common piping (200) having its bottom communicated with the bottom of the U-type spiral piping structure (800) of each route and having its top communicated with the shared first fluid inlet and outlet terminal (1101), and to envelope the thermal insulating device (400) installed on the common piping (200), so as to configure the columnar structure enveloped by the columnar thermal conductive body (300);

3) Columnar structure utilizing the columnar thermal conductive body (300) having piping therein as the structure member: which is directly made of the columnar thermal conductive body (300), and configured in the structural state having piping therein for being installed with the multiple-route spiral piping structure (800) composed of the U-type spiral piping structure (800) having two or more than two routes and the piping segment (900) of the second fluid inlet and outlet terminal (102) of the U-type spiral piping structure (800), and the common piping (200) installed at the center of the U-type spiral piping structure (800) and communicated with the bottom of the U-type spiral piping structure (800) of each route, and the thermal insulating device (400) installed thereon, so as to configure the columnar structure utilizing the columnar thermal conductive body (300) having piping therein as the structure member.

CLAIMS

1. A pipe member equipped with heat insulation core pipeline and U-shaped annularly-distributed pipeline, which is installed within the thermal storage body (500) composed of natural thermal storage body, such as shallow surface of the earth, or pool, lake, river, ocean, or artificial objects in solid, or gaseous, or liquid state; wherein the pipe member equipped with heat insulation core pipeline and U-shaped annularly-distributed pipeline is constructed through that the piping segments of fluid inlet terminal and/or outlet terminal of the U-type core piping and loop piping are directly made of thermal insulating material, or thermal insulating structure is installed between the inlet terminal and the outlet terminal; so as to prevent thermal energy loss because of thermal conduction between adjacent piping segments of inlet terminal and outlet terminal on the same side when thermal conductive fluid with temperature difference passing through; wherein the multiple-route U-type spiral piping structure (800) having two or more than two routes is installed within the columnar thermal conductive body (300) , and spirally installed at the periphery of the columnar thermal conductive body (300), and the bottom is concentrated toward the center and connected to the first fluid inlet and outlet terminal (101) through the central piping segment of U-type spiral piping (700), and the outer periphery of the central piping segment of U-type spiral piping (700) of the multiple routes concentrated at the center is installed with the thermal insulating device (400), which mainly consist of:

--Multiple-route U-type spiral piping: constituted by a U-type spiral piping structure (800) having two or more than two routes and allowing the thermal conductive fluid (111) to pass through, or by multiple sets of the U-type spiral piping structures (800) installed in the columnar thermal conductive body (300) composed of solid state

or colloidal object; the U-type spiral piping structure (800) in multiple-route is spirally and annularly installed near the peripheral edge of the columnar thermal conductive body (300), wherein the first fluid inlet and outlet terminal (101) of the U-type spiral piping structure (800) of each route is installed at the top of the spiral piping structure center, and is communicated with the bottom of the U-type spiral piping structure (800) of each route through the central piping segment of U-type spiral piping (700) of each route, and the second inlet and outlet terminal (102) of each route is installed at the top end of the U-type spiral piping structure (800) spirally up its own run via the piping segment (900) of the second fluid inlet and outlet terminal (102) of the U-type spiral piping structure (800) of each route;

--Thermal insulating device (400): related to a thermal insulating structure constituted by the followings with thermal insulating effects, such as solid, flexible body, or foam, or enveloped colloid, gas, or liquid, or vacuum structure; the U-type spiral piping structure (800) having two or more than two routes is installed in the columnar thermal conductive body (300), and the central piping segments of U-type spiral piping (700) of the multiple routes are concentrated in the columnar thermal conductive body (300) for upwardly connecting to the first fluid inlet and outlet terminal (101); the central piping segment of U-type spiral piping (700) is directly made of the thermal insulating material or sleeved with the thermal insulating material, or the periphery of the concentrated central piping segments of U-type spiral piping (700) of the multiple routes is installed with the thermal insulating structure (400), by way of the mentioned thermal insulating structure (400), the thermal energy loss caused by thermal conduction between the concentrated central piping segments of U-type spiral piping (700) of the multiple routes, and the U-type spiral piping structure (800) of each route, and the piping segment (900) of the

second fluid inlet and outlet terminal (102) of the U-type spiral piping structure (800) of each route is substantially reduced;

The structure includes one or more than one of the following structural states:

1) Piping structure assembly: which is provided with the multiple-route U-type spiral piping composed of the U-type spiral piping structure (800) having two or more than two routes and the piping segment (900) of the second fluid inlet and outlet terminal (102) of the U-type spiral piping structure (800), and the central piping segment of U-type spiral piping (700) of each route is concentrated adjacent installed at the axial center, and the thermal insulating device (400) is installed at the periphery of the central piping segment of U-type spiral piping (700), or the central piping segment of U-type spiral piping (700) of each route is directly made of thermal insulating material so as to configure the piping structure assembly;

2) Columnar structure enveloped by the columnar thermal conductive body (300): which is provided with the columnar thermal conductive body (300) made of the thermal conductive material in various geometric cross section shapes such as round, oval, square, rectangular, or star-like shapes, for being served to envelope the U-type spiral piping structure (800) having two more or than two routes and the piping segment (900) of the second fluid inlet and outlet terminal (102) of the U-type spiral piping structure (800), and to envelope the thermal insulating device (400) installed at the periphery of the central piping segments of U-type spiral piping (700) concentrated adjacent installed at the axial center, so as to configure the columnar structure enveloped by the columnar thermal conductive body (300); or the periphery of individual central piping segment of U-type spiral piping (700) of the

multiple routes concentrated adjacent installed at the axial center is respectively installed with the thermal insulating device (400), or the individual central piping segment of U-type spiral piping (700) is directly made of the thermal insulating material, so as to configure the columnar structure enveloped by the columnar thermal conductive body (300);

3) Columnar structure utilizing the columnar thermal conductive body (300) having piping therein as the structure member: which is directly made of the columnar thermal conductive body (300), and configured in the structural state having piping therein for being installed with the multiple-route spiral piping composed of the U-type spiral piping structure (800) having two or more than two routes, including the piping segment (900) of the second fluid inlet and outlet terminal (102) of the U-type spiral piping structure (800), the central piping segments of U-type spiral piping (700) of each route which connects to the first fluid inlet and outlet terminal (101) being concentrated adjacent installed at the axial center, and the thermal insulating device (400) installed at the periphery of the central piping segment of U-type spiral piping (700), so as to configure the columnar structure utilizing the columnar thermal conductive body (300) having piping therein as the structure member.

2. A pipe member equipped with heat insulation core pipeline and U-shaped annularly-distributed pipeline as claimed in claim 1, wherein the U-type spiral piping structure (800) having two or more than two routes is installed in the columnar thermal conductive body (300) for being installed nearby the peripheral edge of the columnar thermal conductive body (300), the center of the columnar thermal conductive body (300) is installed with the common piping (200) with a larger diameter, the bottom of the multiple-route U-type spiral piping

structure (800) is communicated with the bottom of the common piping (200), and the thermal insulating structure is installed at the outer periphery of the common piping (200), which mainly consist of:

--Multiple-route U-type spiral piping: constituted by the U-type spiral piping structure (800) having two or more than two routes and allowing the thermal conductive fluid (111) to pass through, or by multiple sets of the U-type spiral piping structures (800) installed in the columnar thermal conductive body (300) composed of solid state or colloidal object; the U-type spiral piping structure (800) in multiple-route is spirally and annularly installed at the periphery of the columnar thermal conductive body (300), and each route has the piping segment (900) of the second fluid inlet and outlet terminal (102) of the U-type spiral piping structure (800) for connecting to the corresponding second fluid inlet and outlet terminal (102), and the bottom of the U-type spiral piping structure (800) of each route is communicated to the common piping (200), and the common piping (200) is installed at the center of the U-type spiral piping structure (800), and the top thereof is connected to the shared first fluid inlet and outlet terminal (1101);

--Thermal insulating device (400): related to a thermal insulating structure constituted by the followings with thermal insulating effects, such as solid, flexible body, or foam, or enveloped colloid, gas, or liquid, or vacuum structure; the U-type spiral piping structure (800) of each route is installed in the columnar thermal conductive body (300), and the common piping (200) is installed at the axial center of the columnar thermal conductive body (300), and the top thereof is connected to the shared first fluid inlet and outlet terminal (1101), and the piping segment of the common piping (200) of the U-type spiral piping is directly made of the thermal insulating material or sleeved with the thermal insulating material, or the thermal insulating structure

(400) is installed between the U-type spiral piping structure (800) of each route and the piping segment (900) of the second fluid inlet and outlet terminal (102) of the U-type spiral piping structure (800) of each route, and the piping segment of the common piping (200) of the U-type spiral piping, by way of the mentioned thermal insulating structure (400), the thermal energy loss caused by thermal conduction between the common piping (200), and the U-type spiral piping structure (800) and the piping segment (900) of the second fluid inlet and outlet terminal (102) of the U-type spiral piping structure (800) of each route is substantially reduced;

The structure includes one or more than one of the following structural states:

1) Piping structure assembly: which is provided with the multiple-route U-type spiral piping composed of the U-type spiral piping structure (800) having two or more than two routes and the piping segment (900) of the second fluid inlet and outlet terminal (102) of the U-type spiral piping structure (800), and the common piping (200) allowing the bottom of the U-type spiral piping structure (800) of each route to be communicated to, and the shared first fluid inlet and outlet terminal (1101) enabling the common piping (200) to upwardly connected to, and the thermal insulation device (400) installed on the common piping (200), or the common piping (200) directly made of thermal insulating material, so as to configure the piping structure assembly;

2) Columnar structure enveloped by the columnar thermal conductive body (300): which is provided with the columnar thermal conductive body (300) made of the thermal conductive material in various geometric cross section shapes such as round, oval, square, rectangular, or star-like shapes, for being served to envelope the multiple-route U-type spiral piping composed of the U-type spiral

piping structure (800) having two more or than two routes and the piping segment (900) of the second fluid inlet and outlet terminal (102) of the U-type spiral piping structure (800), and to envelope the common piping (200) having its bottom communicated with the bottom of the U-type spiral piping structure (800) of each route and having its top communicated with the shared first fluid inlet and outlet terminal (1101), and to envelope the thermal insulating device (400) installed on the common piping (200), so as to configure the columnar structure enveloped by the columnar thermal conductive body (300);

3) Columnar structure utilizing the columnar thermal conductive body (300) having piping therein as the structure member: which is directly made of the columnar thermal conductive body (300), and configured in the structural state having piping therein for being installed with the multiple-route spiral piping structure (800) composed of the U-type spiral piping structure (800) having two or more than two routes and the piping segment (900) of the second fluid inlet and outlet terminal (102) of the U-type spiral piping structure (800), and the common piping (200) installed at the center of the U-type spiral piping structure (800) and communicated with the bottom of the U-type spiral piping structure (800) of each route, and the thermal insulating device (400) installed thereon, so as to configure the columnar structure utilizing the columnar thermal conductive body (300) having piping therein as the structure member.

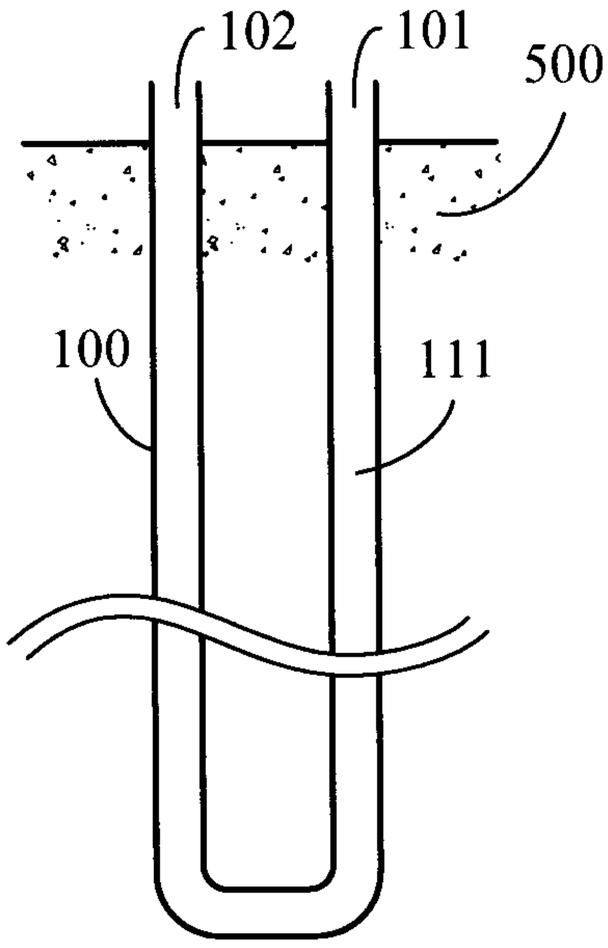

Fig. 1 (Prior Art)

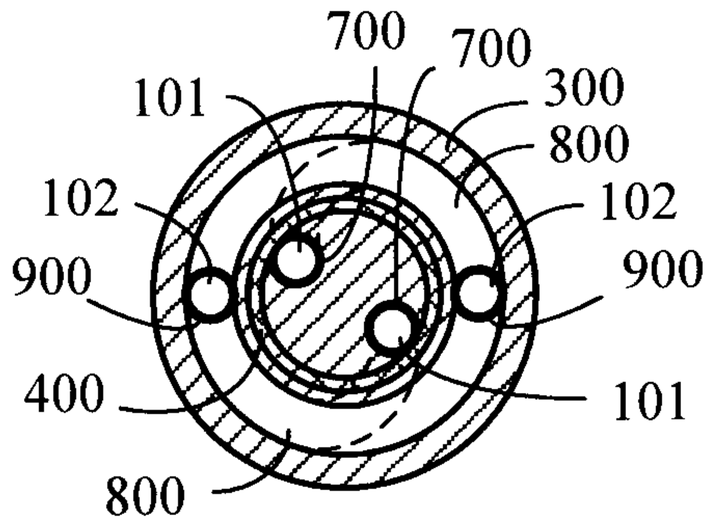

Fig. 3

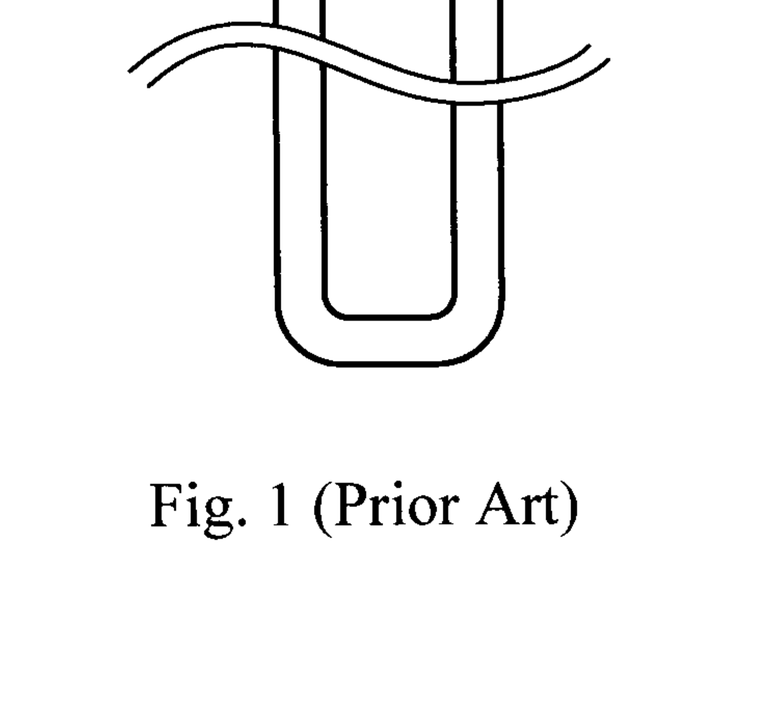

Fig. 2 (Prior Art)

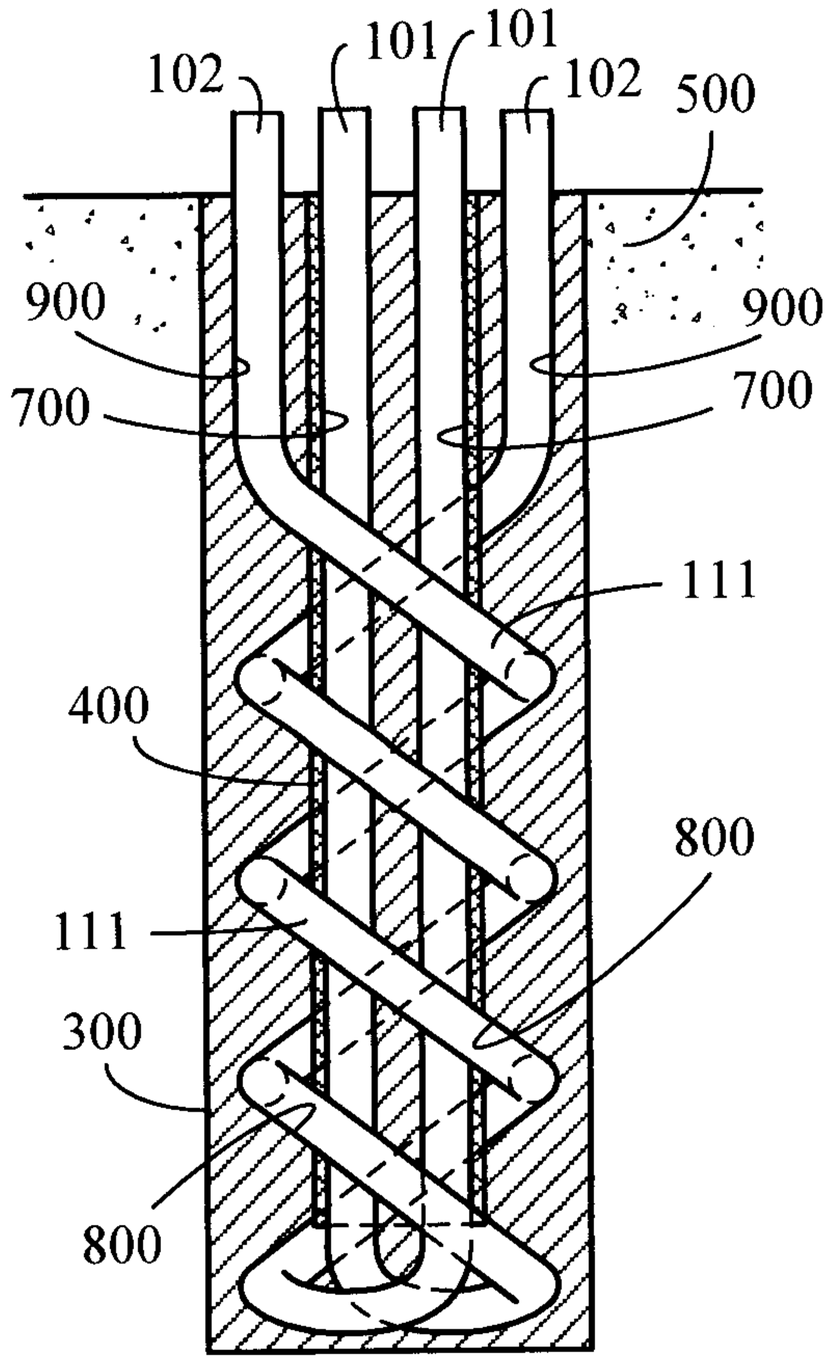

Fig. 4

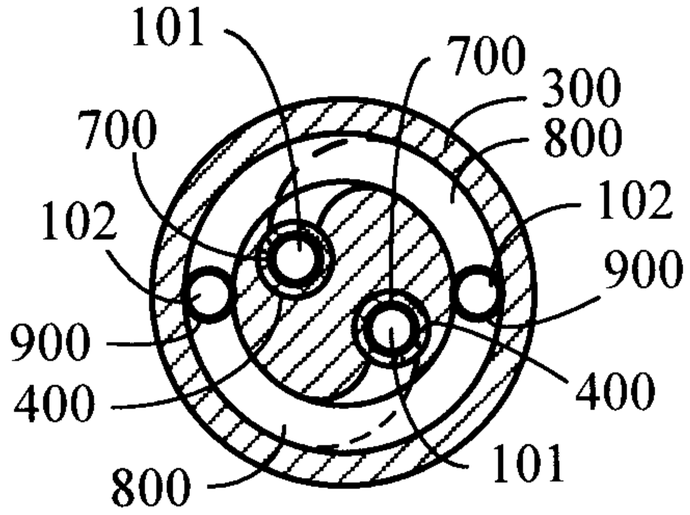

Fig. 5

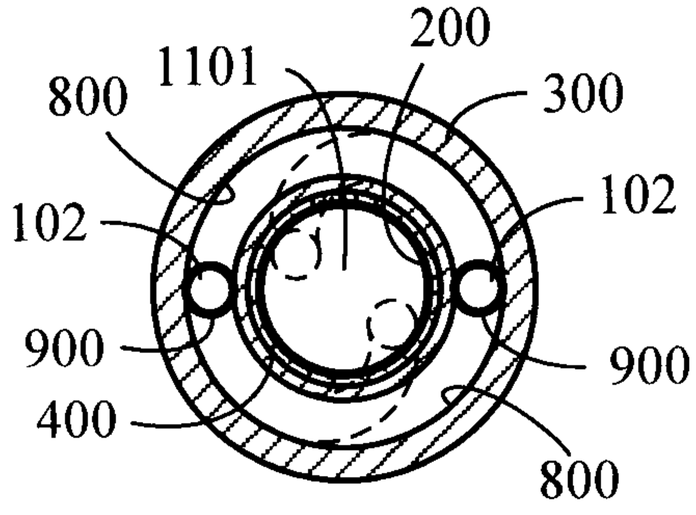

Fig. 7

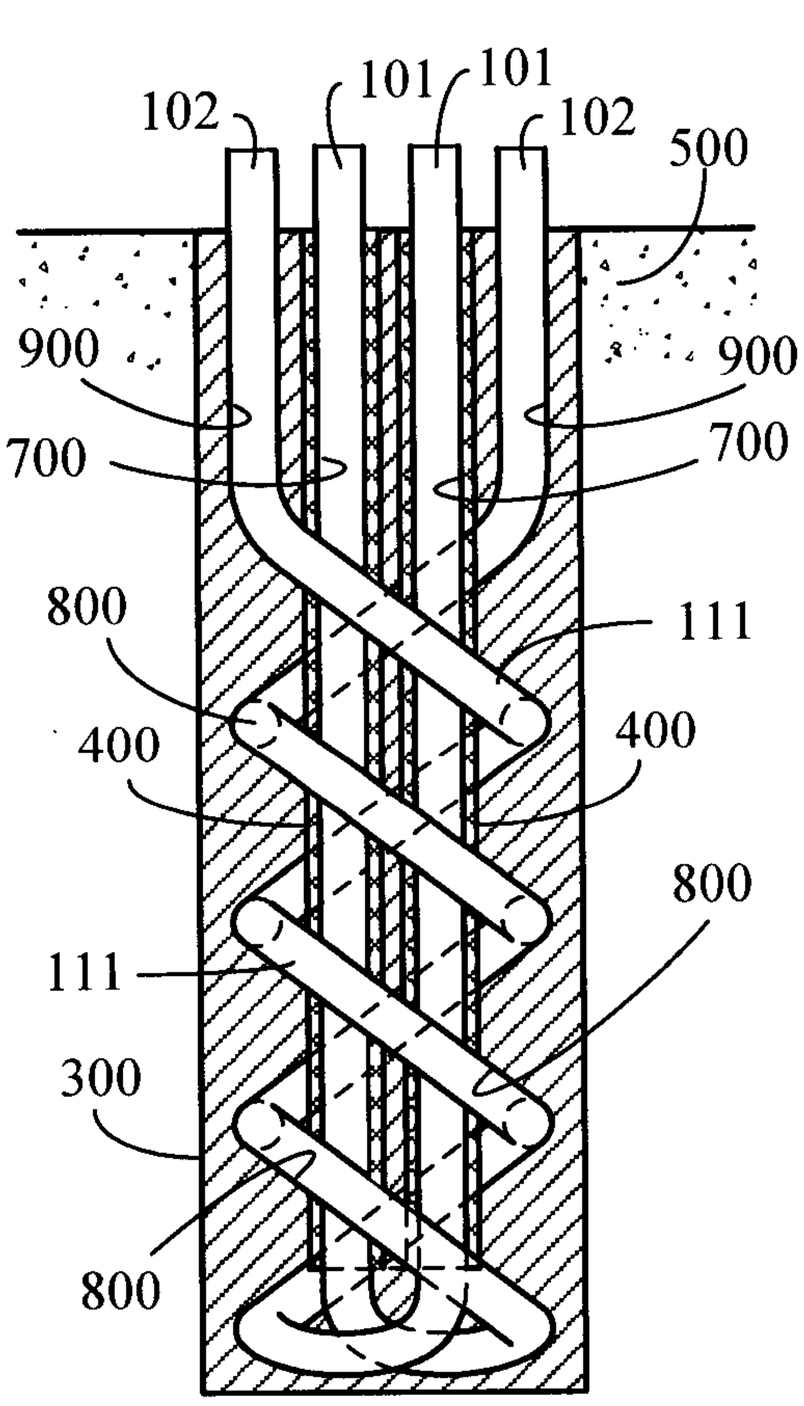

Fig. 6

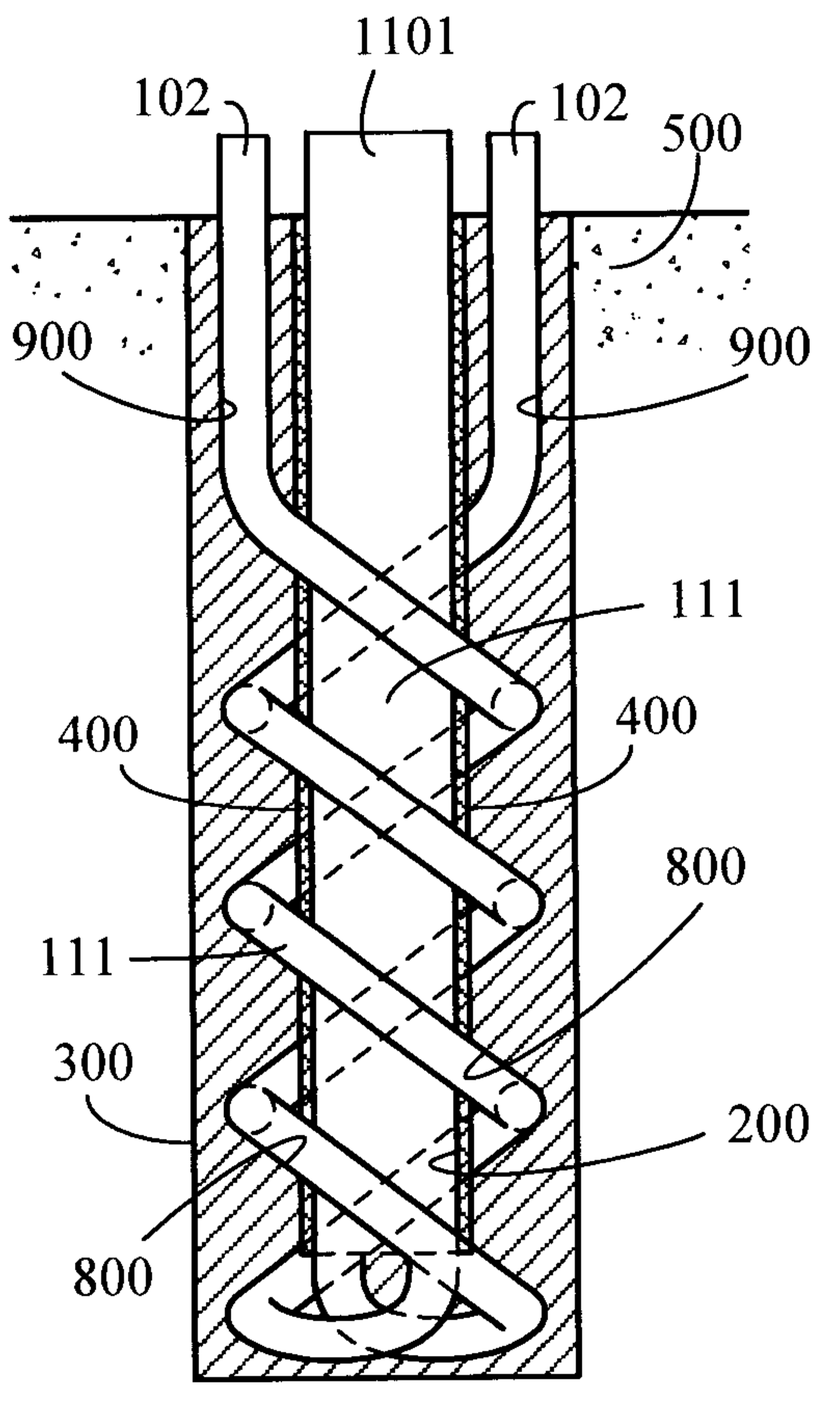

Fig. 8

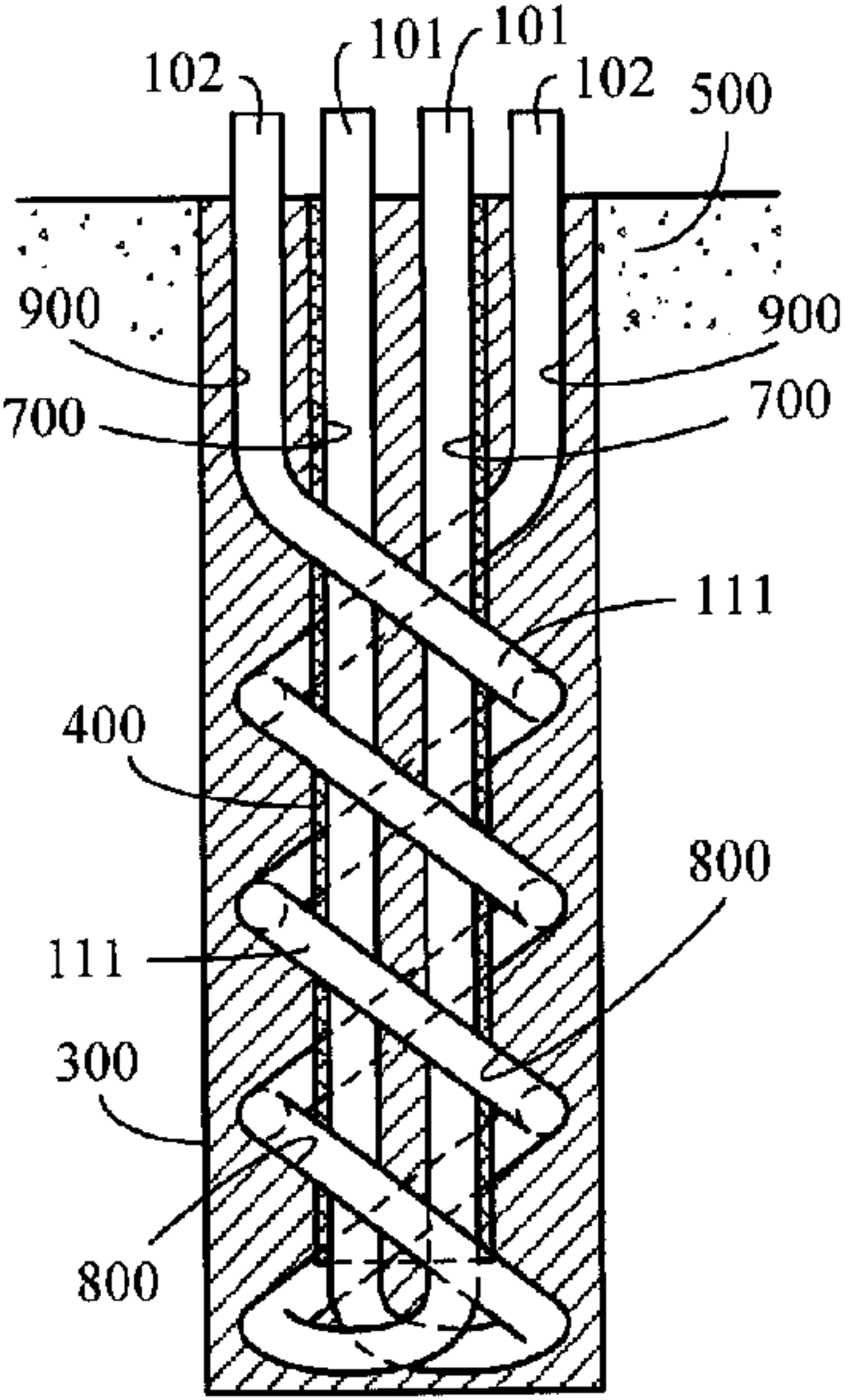
102
101
101
102
500
900
900
700
700
111
400
800
111
300
800