July 4, 1939. J. R. MacKAY 2,165,063

COMMUNICATING SYSTEM

Original Filed June 11, 1934

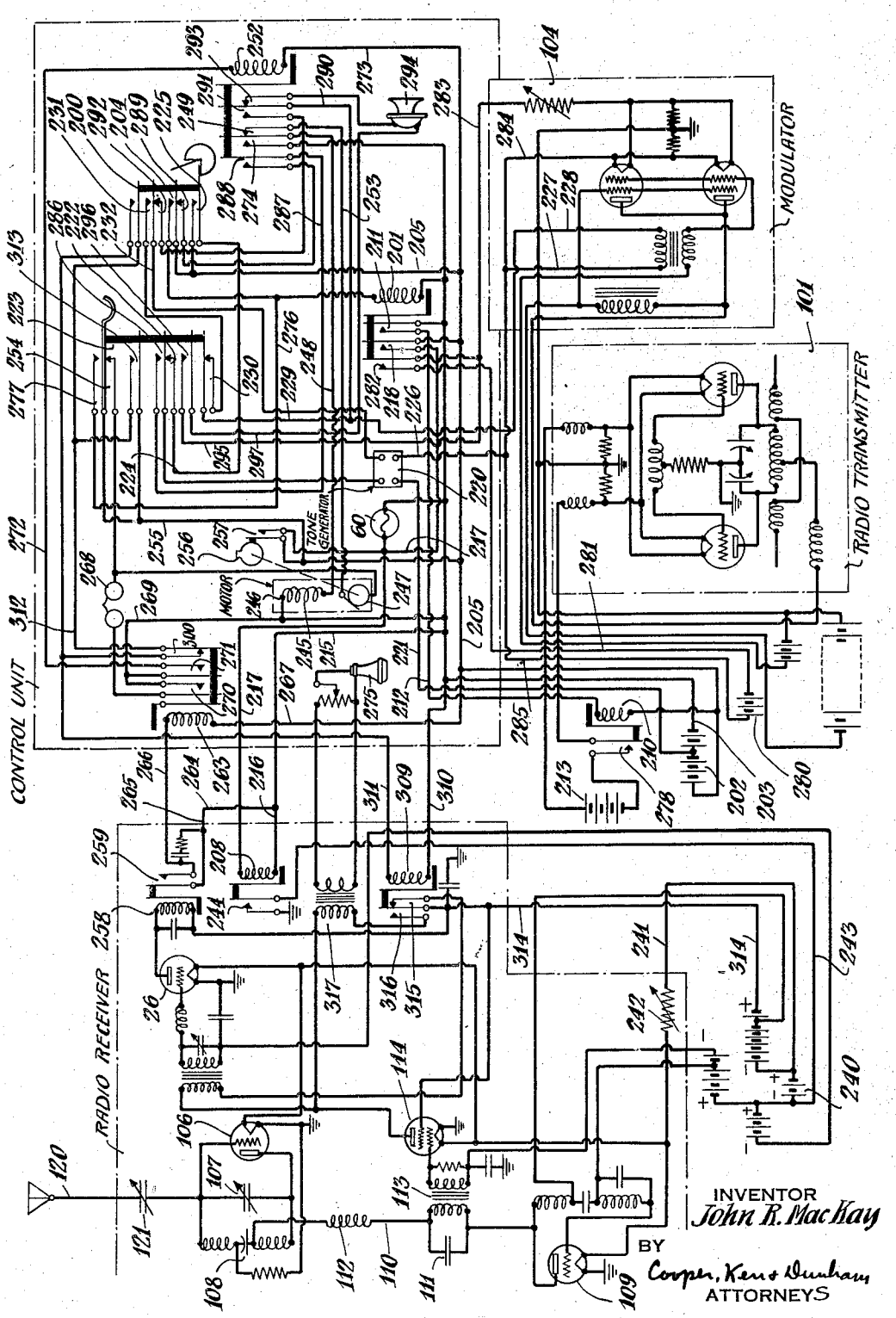

Patented July 4, 1939 2,165,063

UNITED STATES PATENT OFFICE

2,165,063

COMMUNICATING SYSTEM

John R. MacKay, West Caldwell, N. J., assignor to Wallace & Tiernan Products, Inc., Belleville, N. J., a corporation of New Jersey

Original applications June 11, 1934, Serial No. 730,127, and March 19, 1935, Serial No. 11,783. Divided and this application October 14, 1937, Serial No. 169,066

6 Claims. (Cl. 250—6)

This invention relates to communicating systems. More particularly it relates to telephone systems and from a still more specific aspect it relates to radio telephone systems. This application is a division of my copending application, Serial No. 11,783, filed March 19, 1935, for Communicating system, which is itself a division of my copending application, Serial No. 730,127, filed June 11, 1934, for Communicating system (now Patent No. 2,115,914).

One of the objects of the invention is to provide a two-way radio telephone system in which the user at the calling station operates a call switch and the user at the called station receives a signal, as the ringing of a bell, thereupon lifts his telephone receiver from its hook, and thereby the user at the calling station is given a signal, as by means of a bell, indicating that his call has been put through, and the user at the calling station thereupon removes his telephone receiver from its hook, and two-way telephone conversation may then proceed as in the case of an ordinary communication over two land line telephones which have been properly connected.

A further object of the invention is to provide a radio telephone system in which the major portion of the apparatus employed is not energized at all times but only periodically at such desired intervals as will conserve the energy required to energize or activate such apparatus.

Further objects are to provide new combinations of instrumentalities and new sub-combinations thereof whereby the communication system is comparatively inexpensive to build and operate, comparatively simple in operation from the standpoint of the intelligence required to use it, and thoroughly reliable in its operation. Other objects and advantages will appear as a preferred form of the invention is hereinafter disclosed.

The drawing illustrates an embodiment of what is considered to be a preferred form of the invention, and shows a wiring diagram of the apparatus at one of two stations between which radio telephone communication is to be established and maintained. The wiring diagram of the apparatus at the other station in the system may be, and by way of example is here assumed to be, identical with that shown in the drawing. For convenience, therefore, the two stations will be identified as station A and station B, and in the following description the drawing will be taken to represent each of the stations in turn, as will be explained. It will be understood, however, that the transmitting apparatus at station A is adapted or adjusted to emit a high frequency carrier wave at a frequency different from that of the high frequency carrier which the transmitting apparatus at station B is adapted or adjusted to emit, and that the radio receiving apparatus at station A is tuned to the carrier frequency of station B, and the radio receiving apparatus at station B is correspondingly tuned to the carrier frequency of station A.

Each station of the system includes radio receiving apparatus and radio transmitting apparatus. The receiving apparatus is adapted to receive radio telephone signals and convert them to sound frequency speech-representing currents and the transmitting apparatus is adapted to have its filament and plate supply rendered operative upon energization of a transmitter control relay so as to emit a desired carrier frequency, which may be modulated for effecting the calling as hereinafter described, and the transmitter is also adapted, when energized, to modulate the carrier properly for and in accordance with telephone conversation as likewise hereinafter described.

Although other suitable forms of radio transmitting apparatus may be employed, the transmitting apparatus illustrated comprises an oscillator designated generally as **101** and which comprises a push-pull oscillator of well known construction and operation, which feeds into two antennas that are each tuned to one-quarter wavelength. The transmitting apparatus comprises also a suitable modulator **104** of standard construction, and adapted to superimpose the voice currents upon the high frequency oscillations generated by the oscillator **101** and supplied to the antennas. The modulator **104** is also adapted to superimpose upon the high frequency oscillations generated by the oscillator **101**, a calling modulation, set up as hereinafter described. The various tuning instrumentalities, coupling coils, and plate current supply sources, etc. will be readily recognized by their usual symbols and from the diagrammatic illustration; it being understood, of course, that other forms of apparatus may be employed such as suitable plate circuit power supply instead of the plate battery supply shown in the wiring diagram.

The radio receiving apparatus or set shown at the left-hand side of the drawing is a so-called super-regenerative receiving set. It comprises a vacuum tube system **106** so tuned and connected as to generate high frequency oscillations by regeneration or feedback. The operation of the oscillator **106** will be understood by those skilled in the art upon inspection of the wiring diagram;

suffice it to say that the tuning condenser 107 gives a large frequency range but comparatively sharp tuning whereas the tuning condenser 108 has a limited frequency range and permits of a verier action, so to speak, so as to facilitate tuning that would be rendered much more difficult if the sharply tuned condenser 107 were present alone. It will be understood, of course, that the ordinary users of the apparatus do not do any of this tuning but it is a matter of initial adjustment, and which remains fixed after satisfactory initial adjustment. It will be further understood by those skilled in the art that the tube 106 with its circuits serves not only as a generator of high frequency oscillations but also as a detector tube as in the ordinary super-regenerative operation.

The radio receiving apparatus 105 comprises also a low frequency oscillator 109 which is so connected and coupled as to generate the so-called "quenching" frequency for the system of the tube 106. The "quenching" system comprising the tube 109 is connected to the oscillator system, comprising the tube 106, by a conductor 110 in which are connected in series a suitable condenser 111 and a radio frequency choke coil 112. The condenser 111 passes the desired "quenching" frequency and the choke coil 112 prevents the passage from the tube system 106 to the remainder of the radio receiving system, of high frequency oscillations generated in the tube system 106. A transformer 113 having its primary shown shunted across the condenser 111 transfers the audio components of the system 106—109 to the grid circuit of an amplifying vacuum tube 114; the secondary of the transformer 113 being connected in the grid circuit of the tube 114.

As in the case of the illustration of the radio transmitting apparatus, the radio receiving apparatus may be supplied from a suitable plate current source such as the well known B battery illustrated, or any other suitable plate supply.

Although a super-regenerative receiving apparatus has been shown and described, and may be advantageously used, it will be understood that other types or circuits of receiving apparatus may be satisfactorily used in the present invention, as will be understood by those familiar with the art, and the invention is consequently not limited to any particular type of receiving or transmitting apparatus.

Each station of the system includes an intermittently operating or cycling mechanism having for its principal purposes the conservation of apparatus and of energy required.

A motor 245 is provided for continuously rotating a cam 256 which periodically operates the cam switch 257. While this motor may assume a variety of different forms, I prefer at present to employ a motor of the magnetic type, such as that described and claimed in United States Patent No. 1,985,357 for Electric motor apparatus, granted December 25, 1934, upon the application of Charles F. Wallace.

Referring further to the drawing, the various circuit connections and features of construction will be described by setting forth the operation of the system.

Assume first that the system shown is that at the calling station, i. e. station A. When it is desired to call the other station, i. e. station B, the call switch 200 is thrown to calling position. This operation of the call switch closes the circuit of the relay 201 through the following circuit: from the positive side of the 7½ volt battery 202, through the conductor 203, through the relay 201, through the now closed contacts 204 of the call switch 200, through the conductor 205, back to the negative side of the 7½ volt battery. Energization of the relay 201 in turn causes energization of the transmitter control relay 210 through the following circuit: from the positive side of the 7½ volt battery 202, through the conductor 203, through the contacts 211 of the relay 201, through the conductor 212, through the relay 210 and back to the negative side of the 7½ volt battery 202. Energization of the relay 210 causes it to close its contacts to establish the following current supply to the filaments of the vacuum tubes of the oscillator 101: from the positive side of the filament battery 213 to the filaments of the tubes of the oscillator 101, through the now closed contacts of the relay 210, and back to the filament supply battery 213.

Energization of the relay 201 also closes the filament supply circuit for the tubes of the modulator 104 of the radio transmitting apparatus at this calling station: from the positive side of the filament supply battery 280, through the conductor 281, through the contacts 282 (now closed) of the relay 201, through the conductor 283, through the filaments of the tubes of the modulator 104, through the conductor 284, through the conductor 285, back to the negative side of the filament supply battery 280.

Energization of the relay 201 also causes the energization of the relay 208 through the following circuit: from the positive side of the 7½ volt battery 202, through the conductor 203, through the conductor 215, through the conductor 216, through the relay 208, through the conductor 217, through the contacts 218 (now closed) of the relay 201, through the conductor 205, back to the negative side of the 7½ volt battery 202.

Operation of the call switch 200 to calling position also closes the circuit through the primary of a suitable tone generator 220, which in this case has a secondary or output winding which supplies tone frequency currents to the modulator 104 of the radio transmission apparatus. The primary circuit of the tone generator which is closed as above described is as follows: from a suitable tap intermediate of the 7½ volt battery 202, through the conductor 221, through the primary circuit of the tone generator 220, through the contacts 222 (now closed) of the hook switch 223, through the conductor 224, through the contacts 225 (now closed) of the call switch 200, through the conductor 205, back to the negative side of the 7½ volt battery 202. The secondary circuit of the tone generator 220 is as follows: from the secondary of the tone generator 220, through the conductor 226, through the conductor 227, through the primary of the modulation transformer of the modulator 104, through the conductor 228, through the conductor 229, through the contacts 230 (now closed) of the hook switch 223, through the contacts 231 (now closed) of the call switch 200, through the conductor 232, to the other side of the secondary of the tone generator 220.

Energization of the relay 208, in the circuit above traced, causes it to close its contacts to establish the following filament supply to the filaments of the super-regenerative receiving apparatus and also to the filament of the tube 26; the filament supply circuit being as follows: from the positive side of the filament battery 240, through the conductor 241, through the filament rheostat 242, through all of the filaments of the

super-regenerative receiver and that of the tube **26**, in parallel, to ground; the negative side of the filament battery **240** being connected through the conductor **243** and contacts **244** (now closed) of the relay **208**, to ground.

By the circuits and instrumentalities above described, the operation of the call switch **200** to calling position has caused the energization of all of the filaments of the tubes of the radio transmitting apparatus, has energized the filaments of all of the tubes of the super-regenerative receiving apparatus and that of the tube **26**, and has caused to be supplied to the modulation transformer of the modulator **104**, a tone frequency current which is super-imposed upon the carrier now emitted from this station.

Next let it be assumed that the system shown is that of the station which is being called, i. e. station B.

The motor **245**, which may, as hereinabove stated, be a Wallace motor and preferably is of that type, comprises a winding **246** and a rotor operated switch **247** which periodically energizes the winding **246** so as to produce continued rotation of the rotor at its predetermined governor controlled speed. The circuit of the motor is as follows: from the positive side of the 7½ volt battery **202**, through the conductor **203**, through the winding **246** of the motor **245**, through the conductor **248**, through the contacts **249** (now closed) of the relay **252**, through the conductor **253**, through the switch **247** of the motor **245**, through the contacts **254** (now closed) of the hook switch **223**, through the conductor **255**, through the conductor **205** to the negative side of the 7½ volt battery **202**. When the station (B) now under consideration is not receiving a modulated carrier from the calling station, the circuit of the motor, just traced, stays closed, and the motor continues to rotate. The cam **256** of the motor **245**, by virtue of its high spot, closes the contacts **257** once during each revolution. When the contacts **257** are so closed periodically, the following circuit is established through the relay **208**: from the positive side of the 7½ volt battery, through the conductor **215**, through the conductor **216**, through the relay **208**, through the conductor **217**, through the contacts **257**, through the conductor **205**, back to the negative side of the 7½ volt battery **202**.

Energization of the relay **208** causes the filaments of the super-regenerative receiver and the filament of the tube **26** to be energized as described above when it was assumed that the drawing illustrated the calling station.

If no modulated carrier is being received from the calling station the relay **258** is not energized and the motor **245** keeps on running.

If, however, a modulated carrier is being received from the calling station, the relay **258** becomes energized. In the system shown, the transfer tube **26** is so biased that it does not transfer or supply to the relay **258** sufficient current to energize it by the "rush" effect of the super-regenerative receiving apparatus. When the modulated carrier transmitted from the calling station is received at the called station the tone frequency impressed upon the input of the tube **26** is of sufficient amplitude to cause a plate or output current of sufficient magnitude to energize the relay **258**.

Energization of the relay **258** causes its contacts **259** to close and to establish the following circuit through the relay **263**: from the positive side of the 7½ volt battery, through the conductor **203**, through the conductor **215**, through the conductor **264**, through the conductor **265**, through the contacts **259** of the relay **258**, through the conductor **266**, through the relay **263**, through the conductor **267**, through the conductor **205**, back to the negative side of the 7½ volt battery.

Preferably, although not indispensably, the relay **263** or the relay **258** is of the retarded type such, for example, as the type which closes slowly and releases quickly. This desired operation may be effected by a dash-pot controlled armature or by other suitable means. Such relays of the dash-pot type are commonly used in other circuits such as land line telephone circuits and may readily be acquired in the open market. By providing a relay of this type, the likelihood of false operation due to interfering signals or static is greatly reduced. The system is so designed and operated that the relay **263** (or relay **258**) will be energized, as herein described in response to reception of the prolonged calling carrier received from the other station (A or B). On the other hand, a comparatively short interfering signal or static impulse, or succession of such signals or impulses will not serve to energize this relay, because upon each interruption of the energizing current the relay quickly returns to its deenergized position. As stated, other suitable forms of retarded relays may be employed.

Energization of the relay **263** closes the circuit of the bell **268** at the called station; this bell circuit being as follows: from the positive side of the 7½ volt battery through the conductor **203**; through the conductor **269**, through the contacts **270** (now closed) of the relay **263**, through the bell **268**, through the contacts **254** (now closed) of the hook switch **223**, through the conductor **255**, through the conductor **205**, back to the negative side of the 7½ volt battery **202**.

In response to the modulated carrier emitted from the calling station the bell rings at the called station, being energized as just described.

Energization of the relay **263** also closes the circuit of the relay **252** through the following circuit: from the positive side of the battery **202**, through the conductor **203**, through the conductor **269**, through the contacts **271** (now closed) of the relay **263**, through the conductor **272**, through the relay **252**, through the conductor **273**, through the conductor **205**, back to the negative side of the battery **202**.

Energization of the relay **252** causes its contacts **249** to open and thereby interrupt the circuit of the motor **245** traced above.

Energization of the relay **252** also causes the contacts **274** to close and thereby short-circuit the winding **246** of the motor **245** so as to apply a braking torque to the motor and so rapidly bring it to rest as to prevent its high spot from coasting past the contacts **257** which are now closed. In other words, the motor is stopped when the contacts **257** are in their closed position.

The bell **268** at the called station is now ringing and continues to ring until the user or attendant at the called station removes his telephone receiver or head piece **275** from the hook which operates the hook switch **223**. When the head piece **275** is removed from the hook switch the contacts **254** of the hook switch **223** automatically open, thereby interrupting the bell

circuit above traced, and the bell 268 ceases to ring.

Operation of the hook switch by removal of the head piece also closes the following circuit of the relay 201: from the positive side of the battery 202 through the conductor 203, through the relay 201, through the conductor 276, through the contacts 277 (now closed) of the hook switch 223, through the conductor 255, through the conductor 205, back to the negative side of the battery 202.

Energization of the relay 201 causes energization of the transmitter control relay 210 in the following circuit: from the positive side of the battery 202, through the conductor 203, through the contacts 211 (now closed) of the relay 201, through the conductor 212, through the relay 210, and back to the negative side of the battery 202.

Energization of the relay 210 closes the filament supply circuit of the tubes of the oscillator 101 of the radio transmitting apparatus, this filament supply circuit being from the positive side of the battery 213, through the filaments of the tubes of the oscillator 101, through the contacts 278 (now closed) of the relay 210, and back to the negative side of the battery 213.

Energization of the relay 201 also closes the filament supply circuit for the tubes of the modulator 104 of the radio transmitting apparatus at the called station; this filament circuit being as follows: from the positive side of the filament supply battery 280, through the conductor 281, through the contacts 282 (now closed) of the relay 201, through the conductor 283, through the filaments of the tubes of the modulator 104, through the conductor 284, through the conductor 285, back to the negative side of the filament supply battery 280.

Energization of the relay 252 closes the primary circuit of the tone generator 220 as follows: from the intermediate tap of the battery 202, through the conductor 221, through the primary circuit of the tone generator 220, through the contacts 286 (now closed) of the hook switch 223, through the conductor 287, through the contacts 288 (now closed) of the relay 252, through the contacts 289 (now closed) of the call switch 200 (which call switch is at the called station and, is, therefore, not on calling position), through the conductor 205, back to the negative side of the battery 202.

The secondary circuit of the tone generator 220, which connects it to the primary of the modulating transformer of the modulator 104, is also closed as follows: from one end of the secondary winding of the tone generator 220, through the conductor 226, through the conductor 227, through the primary winding of the modulating transformer, through the conductor 228, through the conductor 290, through the contacts 291 (now closed) of the relay 252, through the contacts 292 (now closed) of the call switch 200, through the conductor 232, back to the other end of the secondary winding of the tone generator 220.

The called station is now transmitting a modulated carrier frequency, this carrier frequency being different from the frequency of the carrier which is being transmitted from the calling station. The modulated carrier frequency now transmitted from the calling station gives an answer back signal to the called station in the manner now to be described.

Let it now again be assumed that the system shown is that of the calling station, i. e. station A. The modulated carrier frequency transmitted from the called station causes the relay 258 at the calling station to be energized, which in turn causes the relay 263 at the calling station to be energized. Energization of the relay 263 at the calling station closes the circuit of the bell 268 at the calling station and the bell rings.

The user or attendant at the calling station now takes his head piece or telephone receiver 275 off the hook of the hook switch 223 and the hook switch automatically goes to its other position. The hook switch also opens the secondary circuit of the tone generator 220 at the contacts 230 (now open) of this hook switch 223 at the calling station.

Removal of the head piece from the hook switch causes deenergization of the tone generator by opening the contacts 222 in the primary circuit of the tone generator 220.

Let it now again be assumed that station shown is the called station, i. e. station B.

Discontinuance of the modulation at the calling station causes the relay 258 at the called station to become deenergized, which in turn causes deenergization of the relay 263 at the called station, which in turn causes deenergization of the relay 252 at the called station. When the relay 252 at the called station thus becomes deenergized it opens the primary of the tone generator 220 at the called station at the contacts 288 (now open) of the relay 252. Deenergization of the relay 252 at the called station causes the contacts 293 to close so as to connect the microphone or transmitter 294 to the primary of the modulating transformer of the modulator 104 at the called station through the following circuit: from the positive side of the battery 280, through the conductor 281, through the contacts 282 (now closed) of the relay 201, through the conductor 295, through the contacts 296 (now closed) of the hook switch 223, through the conductor 297, through the microphone or transmitter 294, through the contacts 293 (now closed) of the relay 252, through the conductor 290, through the conductor 228, through the primary winding of the modulating transformer of the modulator 104, through the conductor 227, through the conductor 285, back to the negative side of the battery 280.

Deenergization of the relay 263 at the called station causes the contacts 300 of that relay to close thereby establishing the following energizing circuit for the relay 309: from the positive side of the battery 202, through the conductor 203, through the conductor 310, through the relay 309, through the conductor 311, through the contacts 300 (now closed) of the relay 263, through the conductor 312, through the contacts 313 of the hook switch 223, through the conductor 255, through the conductor 205, back to the negative side of the battery 202.

Energization of the relay 309 at the called station disconnects the primary winding of the input transformer to the tube 26 from its B battery supply lead 314 by opening the contacts 315. Energization of the relay 309 causes the contacts 316 of that relay to close thereby connecting the primary winding 317 of the speech output transformer to the B supply lead 314, the other end of the primary winding 317 being connected to the plate of the tube 114.

The called station is now in condition to transmit and receive speech.

Now let it again be assumed that the drawing represents the system at the calling station, i. e.

station A. In view of the fact that the modulation has been removed from the carrier transmitted from the called station, the relay **258** at the calling station becomes deenergized, which in turn causes the relay **263** to become deenergized, which in turn causes the relay **252** to become deenergized; thereby placing the microphone or transmitter **294** at the calling station in circuit with the primary of the modulating transformer of the modulator **104** and also causing energization of the relay **309** to disconnect the B supply from the primary of the input transfer of the tube **26** and to connect the plate supply to the primary **317** of the speech output transformer at the calling station.

The calling station, i. e. station A, is now in condition to transmit and receive speech from the called station, i. e. station B.

When the conversation has been completed, the users at the calling and called stations hang up their respective receivers or head pieces **275**, and the user at the calling station throws his call switch **200** to the "off" position. These simple operations cause the parts to be restored to normal position at both stations.

While not essential, I prefer to provide a pilot light at each station to indicate when the call switch at that station has been operated to its calling position and to indicate the operation of the motor **246** at that station. The pilot light **60** is shown connected in parallel with the winding of the relay **208**, and being energized with that winding, the pilot light **60** will light when any call switch is moved to calling position and also whenever the contacts **257** are closed by the cam switch **256** at the station. The pilot light blinks or flashes in response to periodic closure of the cam switch contacts **257**, thus providing a visual monitoring of the apparatus.

The buzzer modulating device shown at **220** may be of the type comprising a transformer, in the primary circuit of which, a microphone transmitter button is connected in series to act as an interrupter; the microphone transmitter button being mounted on a reed so as to impart a mechanical resonance characteristic to it, the reed being mechanically operated as an armature by the core of the transformer. Such a device is generally similar to the well-known induction coil having an interrupter in its primary circuit actuated by the core upon which the primary and secondary windings are wound. The secondary winding of the transformer constitutes the output of the device. Such devices are readily available and are known as "microphone hummers". It will be understood, of course, that other forms of devices may be substituted for this particular type of tone generator, as for example, audio frequency oscillators, etc.

It will now be appreciated that the apparatus illustrated and described is adapted for operation in the following convenient manner. Assuming that station A wishes to call station B, the operator at A throws the call switch to calling position. The result is to initiate the transmission of a calling carrier modulated by the tone generating device. During the next succeeding interval of receiver energization at station B, reception of this modulated wave causes the call bell to ring at station B. The operator there, thus summoned to the telephone, lifts his receiver from its hook. This operatoin of the hook switch at station B initiates transmission of a replying carrier to station A modulated by the tone generating device. At station A this replying modulated carrier is received and causes the call bell to ring. The operator there, now knowing that station B is ready to talk, lifts his receiver from its hook. This operation of the hook switch at station A removes the modulation from the calling carrier which station A has been transmitting. At station B, in response to this cessation of modulation on the calling carrier, instrumentalities are operated which automatically remove the modulation from station B's replying carrier, and at the same time connect in the receiving and transmitting instruments at station B. Back at station A cessation of modulation from the replying carrier causes operation of instrumentalities which connect in the receiving and transmitting instruments at station A; and two-way telephone conversation may now take place between the stations. It will be noted that in major part these operations take place automatically; all that the calling operator need do is to throw his call switch, and then when he hears the bell ring, lift his receiver from its hook; and all that the operator at the other station need do is to take his receiver from its hook.

One of the features of my invention is that the radio receiving apparatus and the radio transmitting apparatus at each station may be spaced at any desired reasonable distance from the control apparatus, thereby facilitating advantageous location of the component parts of the system. In the drawing, for example, the radio receiving apparatus is that enclosed in the box shown in dot and dash lines with the legend "Radio Receiver"; the radio transmitter is enclosed in the box **101** shown in dot and dash lines; the modulator is enclosed in the box **104** shown in dot and dash lines; and the control unit is enclosed in the remaining box shown in dot and dash lines, it being understood that the microphone **294**, the head piece **275**, the hook switch **223**, and the call switch **200**, are all accessible from the outside of the last mentioned box. The box containing the radio receiving apparatus may be located, for example, near the top of a light house, the radio transmitter in the box **101** may be located on a tower or mast at the top of the light house where its antennas would be in the clear, and the control unit (and if desired, also the modulator) may be located in the light keeper's house so as to be readily accessible at all times.

In accordance with the provisions of the patent statutes, I have herein described the principle of operation of my invention, together with the apparatus which I now consider to represent the best embodiments thereof, but I desire to have it understood that the apparatus disclosed is only illustrative and that the invention can be carried out by other means. Also, while it is designed to use the various features and elements in the combinations and relations described, some of these may be altered and others omitted and some of the features of each modification may be embodied in the others without interfering with the more general results outlined, and the invention extends to such use within the scope of the appended claims.

I claim:

1. In a station of a wave signalling system having wave transmitting and receiving means, means including a modulating device for causing the transmitting means to transmit a modulated carrier, relay means responsive to reception of a predetermined signalling modulation from a remote station, a telephone receiver instrument, and a support therefor, the combina-

tion of means controlled by displacement of the receiver from its support for removing the modulating device from operative relation with the transmitting means, with means called into ply by operation of said last-mentioned means and controlled by the relay means, for establishing two-way communication with the remote station in response to cessation of the predetermined signalling modulation from the remote station.

2. In a station of a wave signalling system having wave receiving means, wave transmitting means, means including a modulating device for causing said transmitting means to transmit a modulated carrier, and a relay device responsive to reception by the receiving means of a modulated carrier from a remote station, the control apparatus which comprises means including circuit-controlling means controlled by the relay device, for removing the modulating device from operative modulating relation with the transmitting means, in response to cessation of transmission of a modulated carrier by the remote station.

3. A station of a wave signalling system according to claim 2 which includes a transmitting instrument, and in which the last-mentioned means is also adapted to connect the transmitting instrument in controlling relation with the transmitting means for transmission of communications.

4. In a station of a wave signalling system having transmitting means including wave transmitting apparatus and modulating means therefor, a call switch for causing said transmitting means to transmit a modulated carrier for calling another station, a reply switch for causing said transmitting means to transmit a modulated carrier for replying to an original call from another station, wave receiving means, and a relay device responsive to reception, by the receiving means, of an incoming modulated carrier from another station, the combination of means responsive to operation of said call and reply switches in succession for removing modulations from a calling modulated carrier transmitted by the transmitting means, with means including circuit-controlling means controllable by the relay device, for removing modulation from a replying modulated carrier transmitted by the transmitting means, in response to cessation of transmission of the incoming modulated carrier by the other station.

5. In a wave signalling system which includes a pair of stations having at each station wave receiving and transmitting means, translating instruments, a modulating device for causing the transmitting means to transmit a modulated carrier, and relay means responsive to the carrier modulation of the other station, and having means at the first and second of the stations respectively for initiating transmission of modulated calling and replying carriers, the combination of control means at one station for there removing the modulating device from operative relation with the transmitting means, with means including circuit-controlling means at each station controllable by the relay means, for removing the modulating device from operative relation with the transmitting means at the second station, and for establishing two-way communication between the stations with the translating instruments, in response to cessation of transmission of a modulated carrier from the first station.

6. In a wave signalling system which has means at one station including wave transmitting means and associated modulating means, for sending a modulated calling carrier to a second station, means at the second station including wave transmitting means and associated modulating means, for sending a modulated replying carrier to the first station, and receiving apparatus at each station having a control device responsive to reception of a modulated carrier from the other station, the combination of control means at the first station for rendering the modulating means ineffective to modulate the carrier sent by the transmitting means at said first station, with means controlled by the control device at the second station and in response to cessation of the modulation in the carrier sent by the first station, for rendering the modulating means at the second station ineffective to modulate the carrier sent by said second station.

JOHN R. MACKAY.