F. A. ROSS.

RADIATOR THERMOMETER.

APPLICATION FILED FEB. 16, 1915.

1,159,712. Patented Nov. 9, 1915.

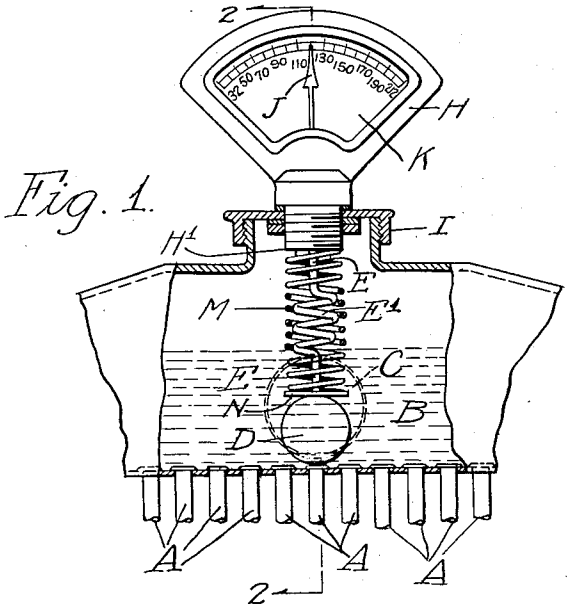

Fig. 1.

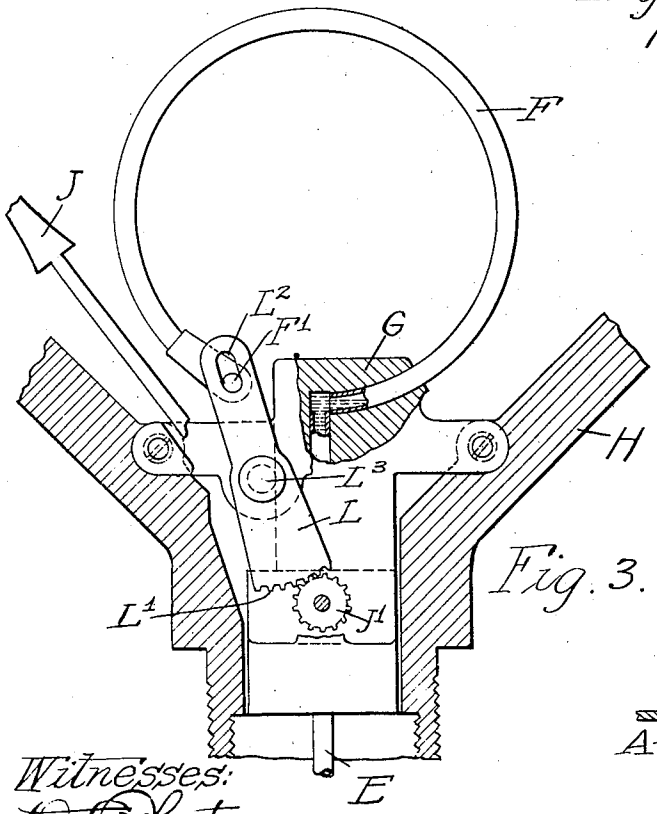

Fig. 3.

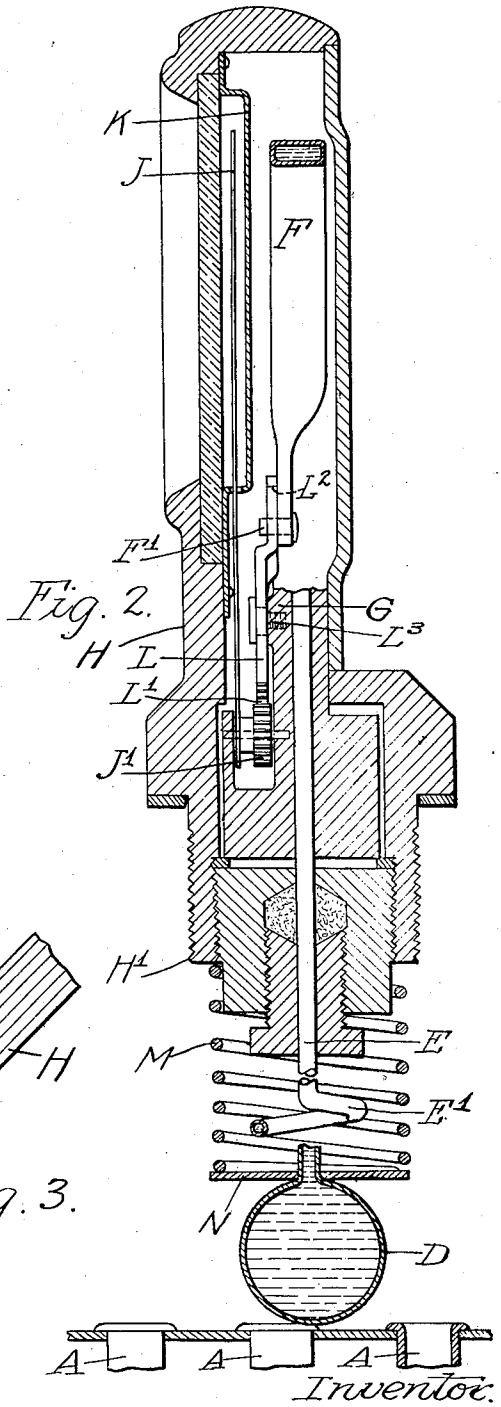

Fig. 2.

Witnesses:

Inventor.
Frank A. Ross.

by Burton & Burton
his Attys

UNITED STATES PATENT OFFICE.

FRANK A. ROSS, OF EVANSTON, ILLINOIS, ASSIGNOR TO STEWART-WARNER SPEEDOMETER CORPORATION, OF CHICAGO, ILLINOIS, A CORPORATION OF VIRGINIA.

RADIATOR-THERMOMETER.

1,159,712. Specification of Letters Patent. Patented Nov. 9, 1915.

Application filed February 16, 1915. Serial No. 8,467.

To all whom it may concern:

Be it known that I, FRANK A. ROSS, a citizen of the United States, residing at Evanston, in the county of Cook and State of Illinois, have invented new and useful Improvements in Radiator-Thermometers, of which the following is a specification, reference being had to the accompanying drawings, forming a part thereof.

This invention relates to thermometers especially designed for registering the temperature of the water in a radiator such as that used in the cooling system of an automobile engine of the explosive type.

The invention comprises certain elements and features of construction described and shown in the drawings as indicated by the claims.

In the drawings: Figure 1 is a front elevation of an instrument embodying this invention shown mounted in position in an automobile radiator, a portion of the latter being shown in section. Fig. 2 is a detail section on a larger scale taken as indicated at line 2—2 on Fig. 1. Fig. 3 is a detail view partly in section showing the operative connection between the indicating member and the heat-responsive element.

It is well understood that it is desirable for efficiency of operation that an explosive motor be run so that the temperature of the cylinder walls shall not vary outside of a certain limited range. This temperature may be controlled in various ways, as by avoiding excessive speed or excessive loads to avoid overheating of the engine, and by varying the exposed surface of the radiator to vary the rate of cooling of the water employed to conduct away the excess heat from the cylinder wall. In a water-cooled engine it is therefore desirable that the operator know the temperature of the cooling water at all times so as to be guided thereby in operating the engine. Most automobile radiators, as now constructed, comprise a comparatively large area of radiating surface made up of a multiplicity of small passages for the water, such as the tubes, A, shown in the drawing, and a limited tank space situated above the tubes, as at B, into which the water flows directly from the engine through an orifice indicated by the dotted circle, C. Under normal conditions of operation there is a body of water of some depth in the tank space, B, above the radiator tubes, A, and this being the upper portion of the entire body of water, and also being in direct communication with the water intake from the engine, its temperature is most closely proportionate to the actual temperature of the cylinder walls.

The thermometer which is the subject of this invention is therefore designed to register the temperature of this portion of the water in the engine cooling system.

The thermometer consists of a hollow bulb, D, positioned to stand normally immersed in the water in the tank, B, and communicating through a tube, E, with a so-called "Bourdon" spring, F, shown as a tube of approximately rectangular cross-section, and C-shaped in form. The Bourdon spring, F, is carried in the frame, H, designed to be mounted on the radiator cap, I, so as to extend outside of the radiator tank space, B. In the frame, H, there is pivotally mounted an indicating hand or needle, J, arranged to traverse a scale marked upon the dial plate, K, which is set facing the driver's seat. The index needle, J, is operatively connected with the Bourdon spring, F, through a lever, L, fulcrumed on the mounting casting, G, and formed at one end with a segmental gear, L^1, meshing with the pinion, J^1, on the needle, J, said lever, L, having a slot, L^2, at its opposite end engaging a pin, F^1, carried by the free end of the Bourdon spring, F.

It is to be understood that the continuous cavity formed by the hollow bulb, D, the tube, E, and the Bourdon spring, F, is filled with a fluid having a positive coefficient of expansion so that upon increase of temperature at the bulb, D, the tendency of the inclosed fluid to increase its volume will result in a slight change of form in the Bourdon spring, F, consisting in a reduction in the curvature of this C-shaped element whereby its free end which carries the pin, F^1, will move away from the opposite end which is fixed in the mounting, G, thus swinging the lever, L, about its fulcrum pivot, L^3, and causing a corresponding change in the position of the needle, J. Thus by proper calibration of the scale on the dial, K, the position of the needle may be made to indicate various temperatures within the range of operation of the instrument, which should

be the range of the temperatures to be expected in the water-cooling system of the engine.

To render this type of instrument adaptable to a large variety of motor vehicles in which the vertical dimension of the tank portion, B, of the radiator varies between wide limits, the tube, E, which connects the bulb, D, with the Bourdon spring, F, may be made of spring metal and helically coiled as shown in Fig. 1, to form a compression spring, yieldingly holding the bulb, D, at a maximum distance from the frame, H, in which the Bourdon spring, F, is carried. It will be understood that this maximum distance is such that when the device is installed in the type of radiator having the deepest tank space, B, its bulb, D, will be lowered as far as possible into said tank space,—that is, down into contact with the upper ends of the tubes, A, or corresponding elements of the radiator, so as to insure the immersion of the bulb, D, in the water under all normal conditions. The same device, however, may be just as readily installed in a radiator in which the tank space, B, is not so deep as the maximum, by reason of the longitudinally yielding nature of the connection between the bulb, D, and the frame, H, afforded by the coiled tube, E. The bulb, D, will be thrust into the tank space, and to the bottom of it, and the radiator cap, I on which the frame, H, is mounted will be forced to its normal position by compression of the coiled portion of the tube, E, in the direction of its coil axis. This permits the device to be marketed in an absolutely uniform style and size while insuring that it will be properly installed regardless of the particular dimension of the tank space, B, in the radiator to which it is applied.

If deemed advisable, the spring action of the coiled portion, E^1, of the tube, E, may be supplemented by a coiled spring, M, reacting between the lower end, H^1, of the frame, H, and a disk or flange, N, applied to the tube, E, just above the bulb, D; and if preferred, the tube, E, may be made of soft and practically inelastic metal, and the spring, M, relied upon entirely for extending the bulb, D, to the proper depth in the tank space, B. In either case the operation of the device will be as above described.

Though it would seem that the alteration of form of the coil, E^1, might change the volume of its fluid-containing cavity, and thus alter the indication of the needle, J, it is found in practice that the volume of this coiled portion of the cavity may be made so small relatively to the total volume of the continuous cavity of the bulb, D, tube, E, and Bourdon spring, F, that the slight distortion of the coil caused by moving the bulb, D, toward or from the spring, F, has only a negligible effect on the total volume of the system, so that for all practical purposes, the reading of the indicating needle is not changed and re-calibration is unnecessary.

I claim:—

1. A thermometer for the purpose indicated, comprising a frame, a Bourdon spring mounted thereon; a hollow bulb, a tube affording communication between said bulb and said Bourdon spring, an expansible fluid filling the continuous cavity of said bulb, said tube and said spring. whereby change of temperature at the bulb will cause change of form of the spring, a part of said tube being coiled about an axis connecting the bulb and the Bourdon spring to permit adjustment of said bulb at different distances from said Bourdon spring, and a coiled spring positioned to react between the said frame and the bulb for yieldingly holding the bulb at a maximum distance from said frame.

2. A thermometer for the purpose indicated, comprising a Bourdon spring, a hollow bulb, a tube affording communication between said bulb and said Bourdon spring, and an expansible fluid filling the continuous cavity of said bulb, said tube and said spring, whereby temperature change at the bulb will cause change of form of the spring; a portion of said tube being curved to provide extra length permitting variation of the distance of the bulb from the Bourdon spring and means for yieldingly holding the bulb away from the spring and returning it to a maximum distance therefrom after it has been forced toward the spring.

In testimony whereof, I have hereunto set my hand at Chicago, Illinois, this 11th day of February, 1915.

FRANK A. ROSS.

Witnesses:
R. H. WALPOLE,
LESLIE MCARTHUR.