R. H. BUCKINGHAM.

MUNTIN JOINT.

APPLICATION FILED MAY 17, 1920.

1,412,163. Patented Apr. 11, 1922.

Fig. 1.

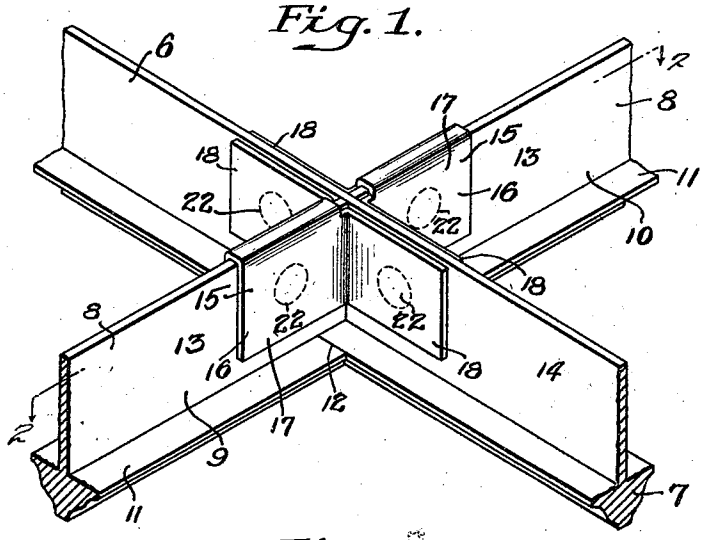

Fig. 2.

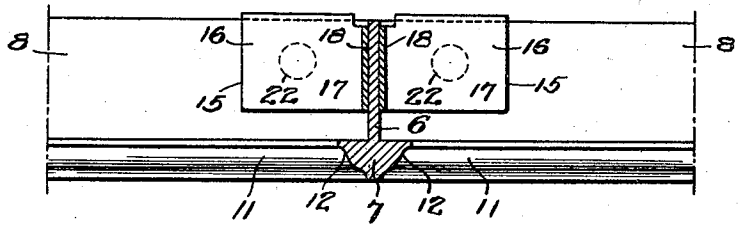

Fig. 3.

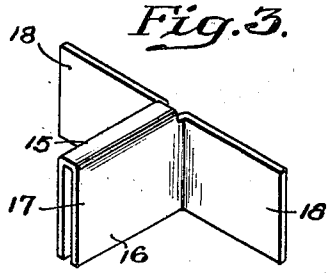

Fig. 4.

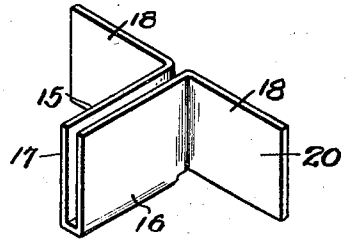

Fig. 5.

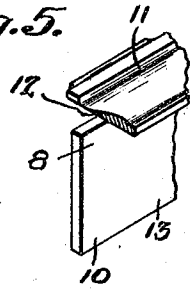

Witnesses.

Evelyn Brompton

Augustus B. Coppes

Inventor.

Roswell H. Buckingham,

by Joshua R. H. Potts

his Attorney

UNITED STATES PATENT OFFICE.

ROSWELL H. BUCKINGHAM, OF NORTH GLENSIDE, PENNSYLVANIA.

MUNTIN JOINT.

1,412,163. Specification of Letters Patent. Patented Apr. 11, 1922.

Application filed May 17, 1920. Serial No. 381,872.

To all whom it may concern:

Be it known that I, ROSWELL H. BUCKINGHAM, a citizen of the United States, residing at North Glenside, in the county of Montgomery and State of Pennsylvania, have invented certain new and useful Improvements in Muntin Joints, of which the following is a specification.

Muntin joints, in metallic window sash or like structures, are usually made by cutting out portions of the intersecting muntins and interlocking the cut-out muntins together at the places where the metal has been cut away. This old method of manufacture is tedious, expensive and furthermore the cutting away of the muntins often weakens them to such extent that they bend or break at the joints.

One object of my invention is to provide an improved muntin joint which will be of strong and durable construction and which can be quickly and cheaply made.

Another object is to so construct my improved joint that the making thereof will not interfere with the proper alignment and disposition of the parts of the sash frame and for this reason the intended or predetermined dimensions of the sash frame will not be altered or interfered with by the making of the joints; it being noted that in the old method of manufacture as above set forth the cutting away of the intersecting muntins often causes an error in the dimension of the sash which results in the improper alignment of the parts of the sash frame and consequently the finished sash is often distorted from the intended or predetermined size and shape.

These objects, and other advantageous ends which will be described hereinafter, I attain in the following manner, reference being had to the accompanying drawings in which

Figure 1 is a perspective view showing intersecting muntins joined together in accordance with my invention,

Figure 2 is a sectional elevation taken on the line 2—2 of Figure 1,

Figure 3 is a perspective view of one of my improved joining devices,

Figure 4 is a perspective view showing the device of Figure 3 in an inverted position, and

Figure 5 is a fragmentary perspective view showing a part of one of the muntins cut away so as to abut a transversely extending muntin such as shown in Figures 1 and 2.

Referring to the drawings, 6 represents a continuous muntin, such for example as the muntin of a metallic window sash, having a longitudinally extending T-head 7, and a transversely extending muntin is made in two sections 9 and 10; each of the sections including a T-head 11 similar to the T-head 7 of the muntin 6. The ends of the sections 9 and 10 are cut away as shown at 12 in Figures 1 and 5 so as to provide recesses between the ribs 13 and the heads, into which opposite edge portions of the T-head 7 of the muntin 6 extend when the sections 9 and 10 of the muntin 8 are brought into abutting position with the muntin 6 as shown in Figure 1. Thus the adjacent ends of the ribs 13 of the sections 9 and 10 abut the opposite faces of the rib 14 of the muntin 6.

In securing the sections 9 and 10 of the muntin 8 to the muntin 6, I provide two similarly constructed metallic clips 15. Each of these clips includes a substantially U-shape saddle 16, the side or leg portions 17 of which have integral tongues or extensions 18 which extend in planes at right angles to the planes of the sides 17 as clearly shown in Figures 3 and 4. The space between the sides 17 of the saddles is substantially equal to the thickness of the ribs of the muntins and said saddles are adapted to embrace the outer edge portions of the ribs 13 of the muntin sections 9 and 10 with the tongues 18 extending parallel with and abutting the opposite surfaces of the rib 14 of the muntin 6 as clearly shown in Figures 1 and 2. The saddles 16 are secured direct to the ribs 13 of the respective muntin sections 9 and 10 and the tongues 18 are also secured to the opposite faces of the ribs 14 of the muntin 6. The method which I employ to secure the saddles and tongues of the clips to the ribs of the respective muntins is to actually cause the metal of the saddles and tongues of the clips to fuse with the metal of the ribs of the muntins. This can be done, without disturbing the alignment or position of the abutting portions of the muntins, by electro-welding or spot welding said parts as indicated by the dotted circles 22 in Figures 1 and 2. The construction and arrangement of parts as above described securely joins the muntins together and the joining can be

quickly accomplished. The provision of the recesses 12 in the heads of the muntin sections 9 and 10 permits an even intersection of parts of the heads of the sections 9 and 10 in connection with the head 7 of the muntin 6. Also the ends of the ribs 13 of the muntin sections 9 and 10 can abut the opposite faces of the rib 14 of the muntin 6 and in view of the connection of the saddles and tongues it is practically impossible to dislodge one of the muntins from its position relatively to the other muntin.

I preferably make the clips 15 of metal which can be bent without fracturing so that the tongues 18 can be bent at a desired angle relatively to the saddle 16 in each of the clips so as to provide an integral structure which will not readily fracture and which will accommodate itself to the use to which it is put.

In certain of the claims I have used the term "continuous contour" by which I mean a contour which is not notched, recessed or split, such for example as a bar either rolled or pressed into shape and remaining in its original condition when used in its association with the other muntin.

While I have described my invention as taking a particular form, it will be understood that the various parts of my invention may be changed without departing from the spirit thereof, and hence I do not limit myself to the precise construction set forth, but consider that I am at liberty to make such changes and alterations as fairly come within the scope of the appended claims.

Having thus described my invention, what I claim as new and desire to secure by Letters Patent is:—

1. A muntin joint including a muntin having a rib and a laterally projecting head; a second muntin extending transversely to the length of said first muntin and including a rib and a laterally projecting head; and a clip having angularly disposed portions in fused integral connection respectively with the sides of the ribs of said muntins; substantially as described.

2. A muntin joint comprising a muntin of unbroken length and having a rib with a laterally projecting head; a second muntin extending transversely to the length of said first muntin and including a rib with a laterally projecting head and a clip having angularly disposed portions respectively secured to the side faces of the ribs of said muntins; substantially as described.

3. A muntin joint comprising two muntins, one muntin having an end abutting the side of the other muntin; and a clip having a saddle embracing and secured to the sides of said abutting muntin, said clip including a tongue extending at an angle to said saddle and secured to the side of said second mentioned muntin; substantially as described.

In testimony whereof I have signed my name to this specification in the presence of two subscribing witnesses.

ROSWELL H. BUCKINGHAM.

Witnesses:
ARTHUR H. HAIGHT,
ZEPH CHIQUOINE.