R. G. SPEER.

SMOKE CONSUMER.

APPLICATION FILED DEC. 14, 1911.

1,039,205.

Patented Sept. 24, 1912.

2 SHEETS—SHEET 1.

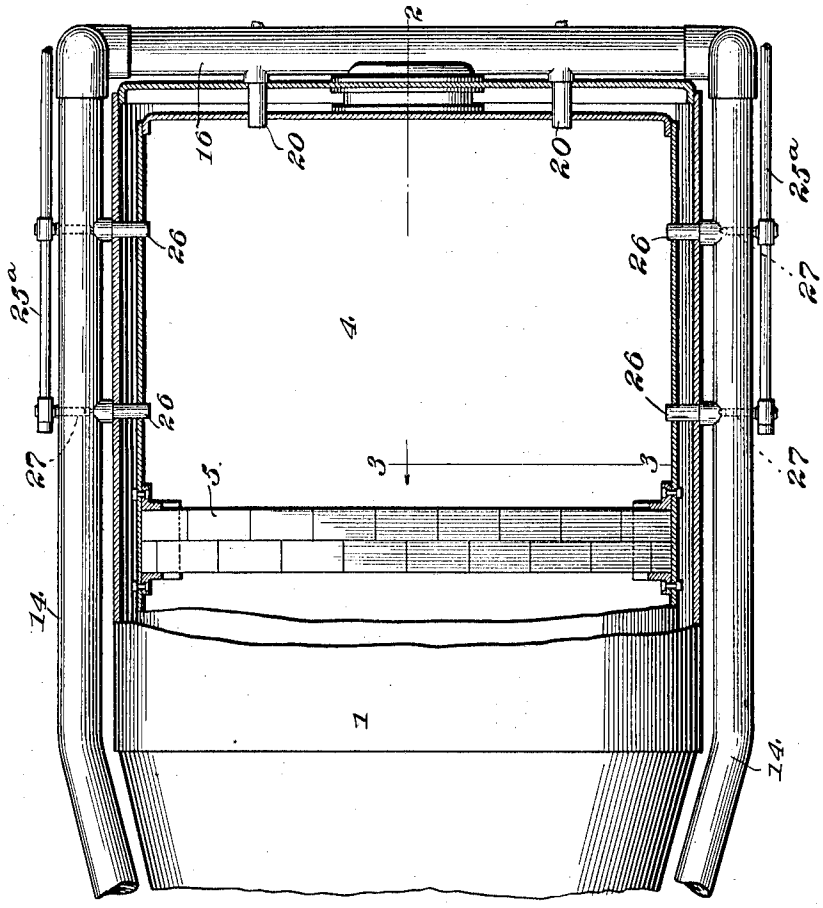

Fig. 1.

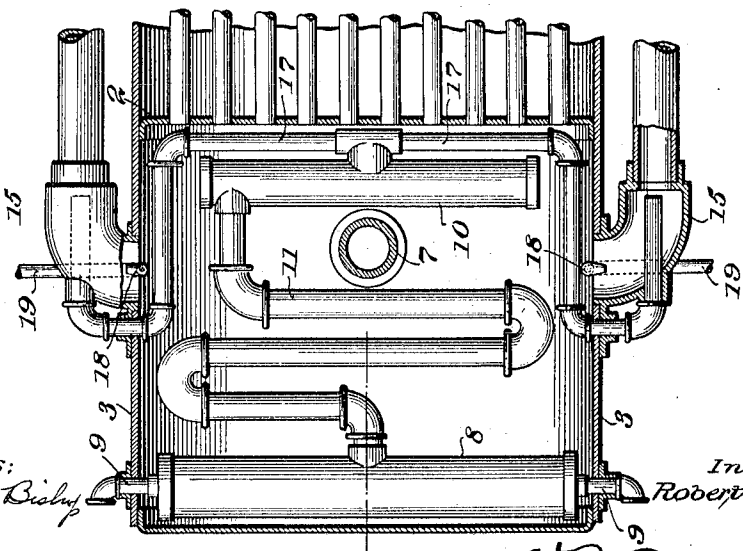

Witnesses:
J. Adolph Bishop
Wm. Janne.

Inventor,
Robert G. Speer,
F. R. Cornwall
Atty

COLUMBIA PLANOGRAPH CO., WASHINGTON, D. C.

R. G. SPEER.

SMOKE CONSUMER.

APPLICATION FILED DEC. 14, 1911.

1,039,205. Patented Sept. 24, 1912.

2 SHEETS—SHEET 2.

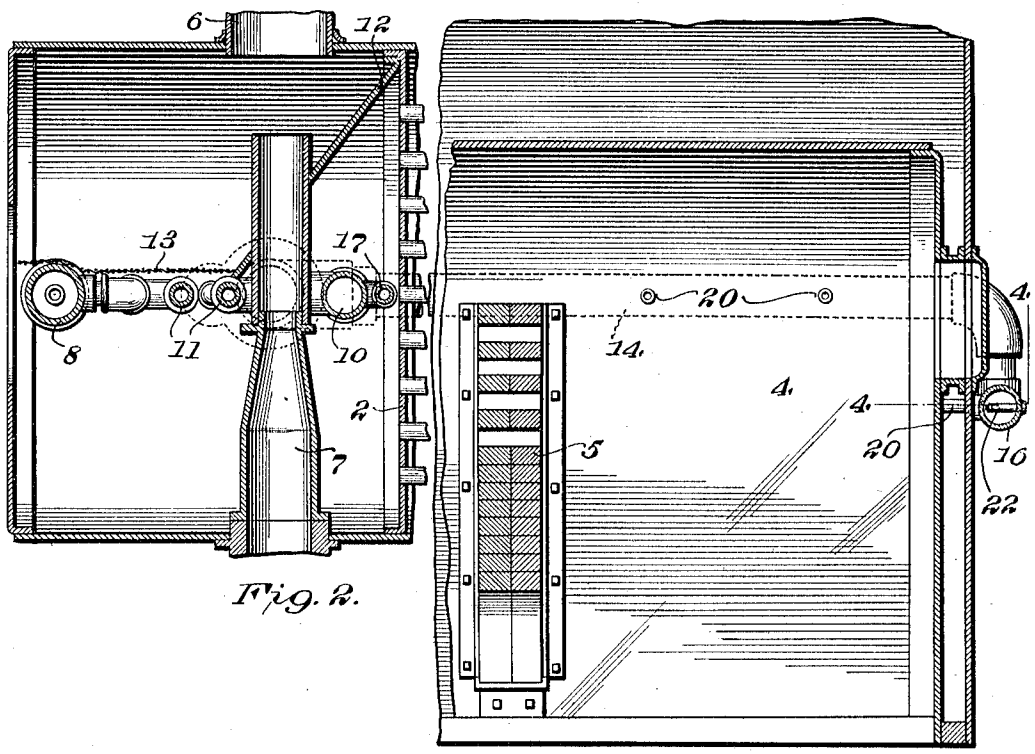

Fig. 2.

Fig. 3.

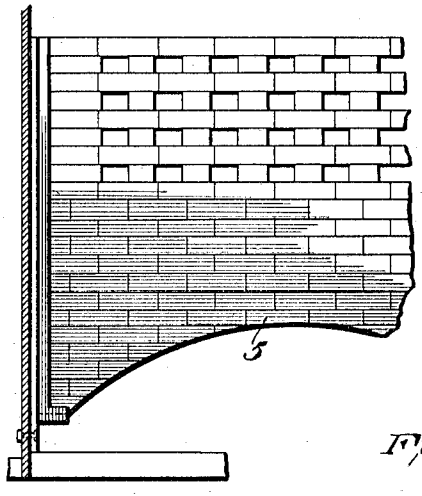

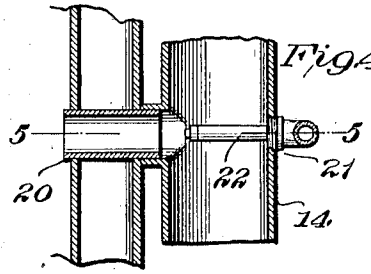

Fig. 4.

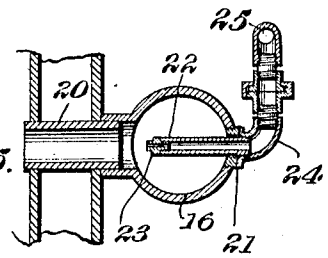

Fig. 5.

Fig. 6.

Witnesses:
J. Adolph Bishop
Wm. Janus.

Inventor,
Robert G. Speer,
F. R. Cornwall,
Atty.

COLUMBIA PLANOGRAPH CO., WASHINGTON, D. C.

UNITED STATES PATENT OFFICE.

ROBERT G. SPEER, OF ST. LOUIS, MISSOURI.

SMOKE-CONSUMER.

1,039,205. Specification of Letters Patent. Patented Sept. 24, 1912.

Application filed December 14, 1911. Serial No. 665,780.

To all whom it may concern:

Be it known that I, ROBERT G. SPEER, a citizen of the United States, residing at St. Louis, Missouri, have invented a certain new and useful Improvement in Smoke-Consumers, of which the following is a full, clear, and exact description, such as will enable others skilled in the art to which it appertains to make and use the same, reference being had to the accompanying drawings, forming part of this specification, in which—

Figure 1 is a horizontal section taken approximately through the center of a locomotive boiler and showing my improved smoke consumer applied thereto. Fig. 2 is a vertical section taken approximately on the line 2—2 of Fig. 1 with parts broken away to economize space. Fig. 3 is a detail section taken approximately on the line 3—3 of Fig. 1. Fig. 4 is an enlarged horizontal section taken approximately on the line 4—4 of Fig. 2. Fig. 5 is a cross section taken approximately on the line 5—5 of Fig. 4. Fig. 6 is a detail section illustrating a modified construction of the chamber or passage way whereby the mixture of heated air and gaseous products of combustion is conveyed along the side of the boiler, and which construction is particularly adapted for locomotive boilers.

This invention relates to that class of devices commonly known as smoke consumers, and the principal object of my invention is to provide a simple, inexpensive apparatus which can be readily installed upon stationary boilers or locomotive boilers, and which can be economically operated to produce perfect combustion within the fire boxes of the furnaces, thereby burning and eliminating the smoke which ordinarily rises from a furnace fire and passes through the stack.

Further objects of my invention are: to utilize the heat passing from the breeching of a boiler into the stack for the purpose of heating air; to draw a certain amount of the products of combustion from the breeching of the boiler and to mix said products of combustion with the heated air; to discharge the mixture of heated air and products of combustion in jet form, into the fire box in a plane substantially above the grate for the purpose of bringing about perfect combustion of the fuel within the fire box and to utilize steam jets for the purpose of mixing the products of combustion and heated air and delivering the same into the fire box.

To the above purposes my invention consists in certain novel features of construction and arrangement of parts hereinafter more fully described and claimed.

I have shown and will describe my improved apparatus as used in connection with a locomotive boiler and fire box, but it will be readily understood that practically the same construction can be utilized with all forms of stationary boiler furnaces.

Referring by numerals to the accompanying drawings: 1 designates the body of the boiler, 2 the front flue sheet, 3 the breeching or smoke box in front of the sheet 2, 4 the fire box and 5 the arch of fire brick within the rear portion of the fire box, and the upper portion of which arch is preferably formed of checker work.

Leading from the top of the breeching 3 is a stack 6, and leading upwardly through the bottom of the breeching in direct vertical alinement with the stack 6 is the usual exhaust pipe 7. The exhaust steam discharges from this pipe 7 directly into the stack 6, thereby creating forced draft through the boiler in the usual manner.

Transversely disposed in the forward end of the breeching 3 is a header 8, and connected to the ends thereof are short tubes 9 which extend through the side walls of the breeching and the outer ends of said tubes are open to the atmosphere.

10 designates a header which is transversely disposed within the rear portion of the chamber within the breeching, and connected to this header 10 is one end of a pipe 11, which extends transversely from one side of the chamber within the breeching to the other, and the forward end of this pipe 11 is connected to the central portion of the header 8.

The headers 8 and 10 together with the pipe 11 which, as shown, has several legs or parts extending transversely from one side of the breeching chamber to the other, provides a manifold within said chamber whereby atmospheric air taken in through the short tubes 9 becomes heated to approximately the same degree as the normal temperature within the breeching chamber.

12 designates a deflecting plate which occupies an inclined position in the upper portion of the chamber within the breeching,

and the upper end of this plate is positioned against the upper end of the front sheet 2 while the lower end of said plate rests upon one of the transversely disposed legs of the pipe 11. The upper portion of the exhaust pipe 7 passes through a suitably located opening in this deflecting plate 12.

13 designates a screen which extends from the lower edge of the plate 12 to the front wall of the breeching 3 and said screen rests directly upon the header 8 and the transverse portions of the pipe 11. This screen is for the purpose of preventing cinders from being drawn into the stack 6 with the forced draft produced through the boiler by means of the exhaust through the pipe 7.

14 designates pipes which extend along the sides of the boiler 1 and the forward ends of these pipes are connected by elbows 15 to the sides of the breeching 3. A transversely disposed pipe 16 is positioned immediately against the front wall of the fire box, and the ends of this pipe are connected to the ends of the pipes 14.

17 designates branch pipes which lead from a single connection at the center of the header 10 outwardly through the side walls of the breeching 3 immediately in front of the elbows 15, and the outer ends of said branch pipes extend into the elbows 15 and terminate adjacent to the ends of the pipes 14.

Jet nozzles 18 are located at the inner ends of the elbows 15 and are positioned so as to throw jets of air or steam into and through said elbows, and leading to these jet nozzles are suitable steam or compressed air pipes 19.

Short horizontally disposed pipes 20 extend inwardly from the pipes 16 through the front walls of the fire box, and seated in the walls of the pipes 16 directly opposite these short pipes 20 are plugs 21. Extending through these plugs 21 are jet tubes 22 provided on their inner ends with perforated plugs 23. Connected to the outer ends of the jet tubes 22 are branch pipes 24 which lead from suitable steam or compressed air pipes 25.

Leading from the pipes 14 through the side walls of the fire box are short pipes 26 which are counterparts of the pipes 20, and positioned in the outer wall of the pipes 14 directly opposite the pipes 26 are jet tubes 27 which are supplied from a suitable steam or compressed air pipe 25^a which, if desired, may be connected to the steam or air pipe 25.

During the operation of my improved smoke consumer steam or compressed air is permitted to enter and discharge through pipes 19, 25 and 25^a, and as a result, jets of steam or compressed air discharge from the jet nozzles 18 into and through the elbows 15, and at the same time jets of steam or compressed air discharge from the jet tubes 22 and 27 through the short tubes 20 and 26. As a result injector action is established through the pipes 20 and 26, which action establishes a circulation through the pipes 14 and 16. This forced circulation or suction draws a certain amount of the products of combustion from the chamber within the breeching through the elbows 15 and the pipes 14, and this forced circulation or suction is further increased by the jets of steam or compressed air issuing from the jet nozzles 18 located in the inlet ends of the elbows 15. The injector action of the products of combustion and the jets of steam or air passing through the elbows and into and through the pipes 14 creates suction through the branch pipes 17, the open ends of which are within the elbows 15, and thus air is drawn in through the short pipes 9 into the manifold comprising the header 8, pipe 11 and header 10 and discharges therefrom into and through the branch pipes 17.

During the passage of the air through the manifold said air is heated owing to the high temperature prevailing within the breeching, and the air in this heated condition discharges from the ends of the branch pipes 17 into the pipes 14, and in passing through these pipes and through the pipe 16 said heated air is mixed with the products of combustion passing through said pipes, thereby supplying the necessary oxygen to form a highly combustible mixture, and said mixture is forcibly discharged by means of the steam or compressed air jets from the pipes 20 and 26 into the fire box.

As hereinbefore stated, the pipes 20 and 26 are located in a plane substantially above the grate bars of the fire box, and thus the combustible mixture discharging from the pipes 20 and 26 is thrown directly onto the top of the bed of fuel within the fire box, and as this combustible mixture ignites and burns within the fire box, all of the free carbon arising from the fire will be consumed, thereby eliminating the smoke-producing element thrown off during the combustion of fuel such as coal.

The combustible mixture burns freely within the fire box and produces a comparatively high degree of heat which is extremely desirable in the generation of steam, and by effectually burning all of the free carbon arising from the burning fuel within the fire box. Thus a perfect combustion of all of the fuel is established, thereby obtaining practically all of the heat units contained in the fuel, and which action can not be obtained where a considerable per cent. of the elements of the fuel passes off in the form of combustible gases and smoke. The non-combustible gases and heated air after discharging from the forward ends of the flues into the breeching pass beneath the deflecting plate 12 in order to escape into the

stack 6, and thus said gases and air are thrown directly onto the manifold comprising the headers 8 and 10 and pipe 11 through which the air passes before discharging into the pipes 14, and thus said air is heated to practically the same temperature as that of the non-combustible gases which discharge through the breeching into the stack.

The air in passing through the manifold is heated to the same degree as the heat of the products of combustion passing through the breeching, and said heated air and products of combustion drawn through the pipes 14 are delivered into the fire box at practically the same temperature as the temperature of the smoke and products of combustion arising from the bed of fuel in the fire box, and thus perfect combustion of the smoke and combustible gases arising from the bed of fuel is obtained without sacrificing any of the heat units in the fuel and without diminishing the steam generating qualities of the fire.

The construction illustrated in Fig. 6 is particularly adapted for use on new locomotive boilers, and this construction, which comprises a curved plate fixed at its edges to the shell of the boiler so as to form a passage way *b*, does away with the necessity of utilizing the pipes such as 14 which extend along the sides of the boiler.

A smoke consumer of my improved construction is comparatively simple, requires practically no attention other than the opening or closing of the valve or valves in the steam or compressed air pipes, can be operated with a comparatively small amount of steam or compressed air, provides means whereby a combustible mixture of heated air and gases taken from the fire box of the furnace is delivered into the fire box and there consumed, and which action results in the combustion and elimination of the smoke arising from the burning fuel within the fire box, and a perfect combustion of all of the fuel delivered into said fire box.

I claim:

1. The combination with a boiler and its furnace, of pipes leading from the breeching to the fire box of the furnace, a plurality of branch pipes leading from the first mentioned pipes through the side and front walls of the fire box thereby substantially surrounding the same, means within the breeching for heating atmospheric air and discharging the same when heated into the inlet ends of the first mentioned pipes, and jet tubes arranged in the branch pipes and in the inlet ends of the first mentioned pipes for producing a forced circulation and mixture of the products of combustion and air through the first mentioned pipes and discharging such mixture into the fire box.

2. The herein described smoke consumer for boiler furnaces, comprising pipes leading from the breeching of the boiler to the fire box of the furnace, a plurality of branch pipes leading from said first mentioned pipes through the side and front walls of said fire box so as to substantially surround the same, a manifold within the breeching of the boiler, which manifold receives air from the exterior of the boiler, pipes leading from said manifold into the inlet ends of the first mentioned pipes, jet pipes arranged to discharge directly into the inlet ends of the first mentioned pipes and jet pipes arranged to discharge directly into the branch pipes, all of which jet pipes are adapted to produce a circulation and mixture of heated air and products of combustion through the first mentioned pipes.

3. The herein described smoke consumer for boiler furnaces comprising pipes leading from the breeching of the boiler to the boiler furnace, a plurality of branch pipes leading from the first mentioned pipes through the side and front walls of the fire box so as to substantially surround the same, jet tubes attached to discharge through said branch pipes for producing forced circulation through the first mentioned pipes, a pair of headers within the breeching chamber of the boiler, one of which headers is provided with air inlet openings, pipes leading from the other header into the inlet ends of the first mentioned pipes, a pipe having a series of transversely disposed legs which last mentioned pipe connects the headers and jet tubes arranged to discharge into the inlet ends of the first mentioned pipes for assisting the first mentioned jet tubes in producing a circulation of products of combustion and heated air through said first mentioned pipes.

In testimony whereof I hereunto affix my signature in the presence of two witnesses, this 7th day of December, 1911.

ROBERT G. SPEER.

Witnesses:
M. P. SMITH,
LILY POST.

Copies of this patent may be obtained for five cents each, by addressing the "Commissioner of Patents, Washington, D. C."