Nov. 6, 1956 N. R. LIBERT 2,769,174

TACKING MACHINE

Filed June 25, 1954 2 Sheets-Sheet 1

Fig. 1.

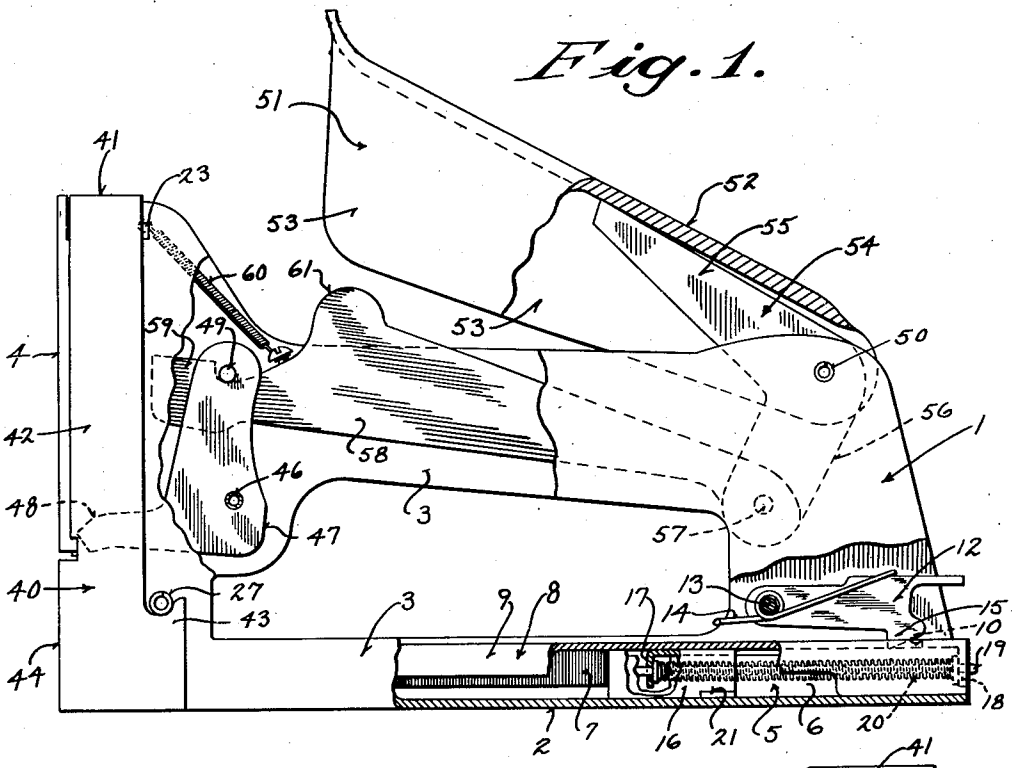

Fig. 2.

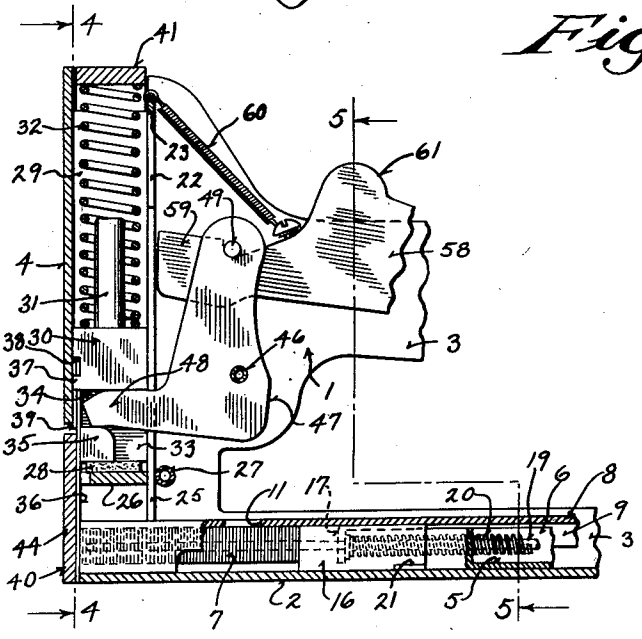

Fig. 4.

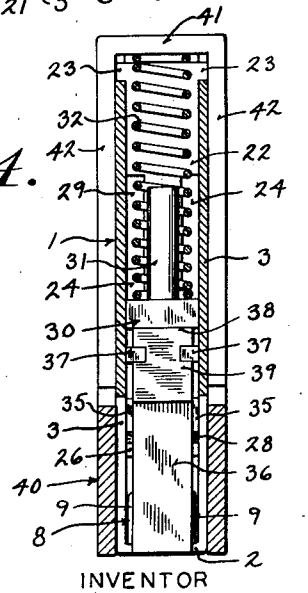

INVENTOR

Norris R. Libert

BY

Arthur H. Seidel

ATTORNEY

Nov. 6, 1956 N. R. LIBERT 2,769,174

TACKING MACHINE

Filed June 25, 1954 2 Sheets-Sheet 2

Fig. 3.

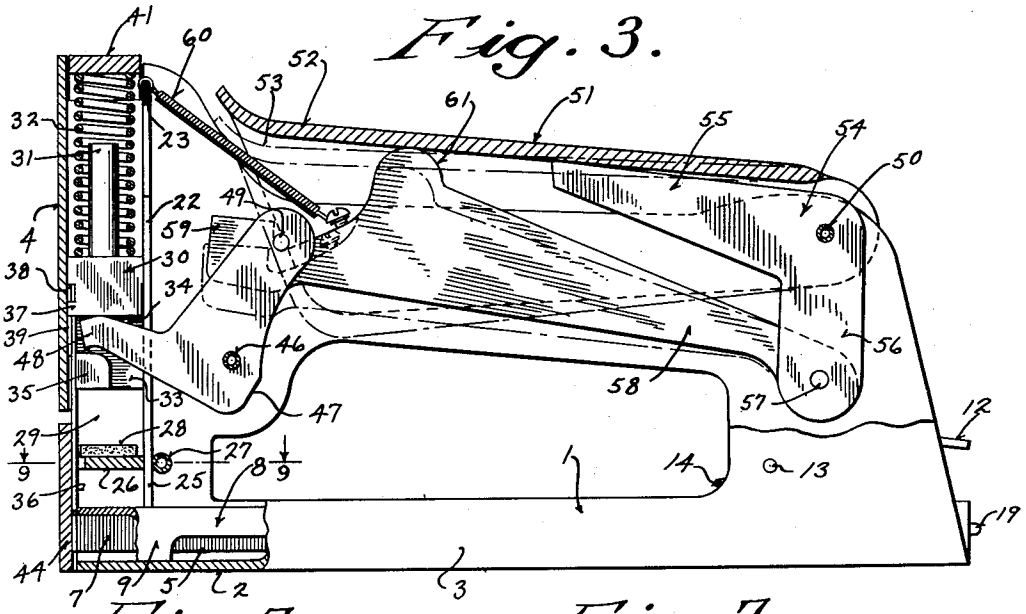

Fig. 5.

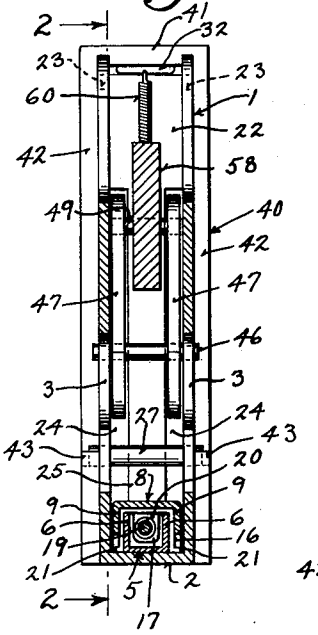

Fig. 7.

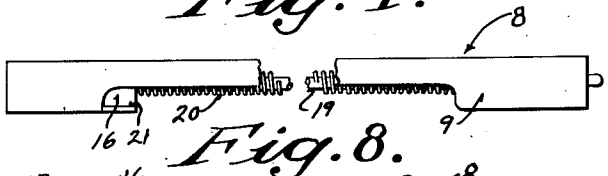

Fig. 8.

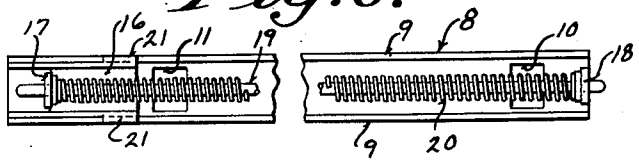

Fig. 9.

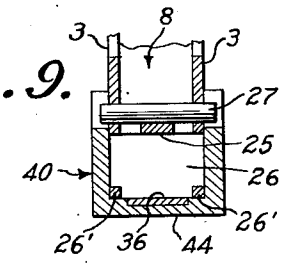

Fig. 6.

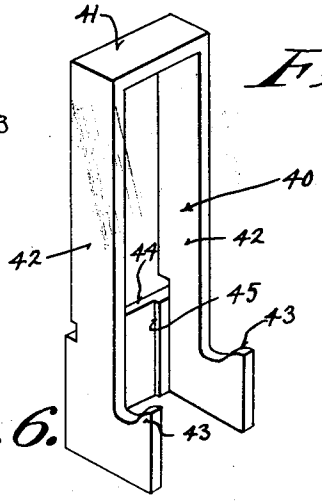

INVENTOR

Norris R. Libert

BY

Arthur H. Seidel

ATTORNEY

United States Patent Office 2,769,174 Patented Nov. 6, 1956

2,769,174

TACKING MACHINE

Norris R. Libert, Waterford, Wis.

Application June 25, 1954, Serial No. 439,257

10 Claims. (Cl. 1—49)

This invention relates to tacking machines for the driving of staples and it more specifically resides in a gun tacker with a staple ejecting driver movable against a main spring for loading the spring and adapted to be driven, in turn, through a staple ejecting stroke by the spring upon breaking a linkage employed for moving the driver against the spring, the tacker having an operating handle that is moved in such manner that reaction forces occurring upon driving the staple from the tacker may be absorbed without undue fatigue to the operator, and further having a displaceable staple positioning jaw to which staples are fed and from which they are ejected, that is resiliently urged against the staple ejecting driver to insure an aligned relation between the driver and each staple to be ejected.

The use of a tacking machine over a substantial time period is accompanied by a significant degree of fatigue of the operator. Particularly, is this evident where the operator is engaged in overhead work, such as when applying acoustical ceiling tiles, or where the operator is working at varied levels of height, such as when applying insulation bats to wall boards. For efficient operation the fatigue factor should be minimized, for then the rapidity of the operator's movements may be continued at higher levels throughout the working period.

Fatigue is induced by both the weight of the tacking machine, which must be supported in the operator's hand, and the reaction forces occurring upon each expansion of the driving spring for the ejection of a staple. Such reaction forces are often manifested by a rebound of the tacker from the work surface, which in turn is transmitted to the operator's hand and forearm in the form of shock. In the present invention the movement of the operator's hand in depressing the handle for loading and releasing the main spring, for the ejection of a staple, brings the hand into a position above the head end of the apparatus from which the staple is ejected. In this manner, the apparatus is pressed firmly against the work surface, so that rebound will be minimized and reaction forces most effectively absorbed. Tiring of the operator will be alleviated and fatigue reduced.

It is an object of this invention to provide a tacking machine in which the reaction forces attendant with the ejection of a staple will be effectively absorbed to reduce the fatigue induced during continued operation of the apparatus.

It is another object of this invention to provide a tacking machine in which the movement of the operator's hand upon the operating handle maintains the apparatus firmly against the work surface to minimize rebound movement.

It is another object of this invention to provide a tacking machine that has an improved resilient mounting for the jaw that guides the staple ejecting driver and the staples when ejected from the apparatus to align the driver and staples for minimizing fouling of the staples that might otherwise occur.

It is another object of this invention to provide a tacking machine that may be readily and easily disassembled for purposes of adjustment and repair.

It is another object of this invention to provide a tacking machine in which staples may be loaded without requiring a dismantling or removal of any of the elements of the apparatus from their assembled relation.

It is another object of this invention to provide a tacking machine in which the total energy storage required of the main operating spring is reduced, thereby minimizing the fatigue factor.

It is another object of this invention to provide a tacking machine in which the main operating spring functions with a dual purpose, to resiliently retain a staple guiding jaw in firm position against the staple driver, and to eject staples from the machine upon release from compressed position.

These and other objects and advantages of this invention will appear in the description to follow. In the description reference is made to the accompanying drawings which form a part hereof and in which there is shown by way of illustration and not of limitation a specific form in which this invention may be embodied.

In the drawings:

Fig. 1 is a side view in elevation with parts broken away and in section of a gun tacker in which this invention is embodied.

Fig. 2 is a fragmentary side view in elevation and in section of the gun tacker shown in Fig. 1 viewed through the plane 2—2 designated in Fig. 5,

Fig. 3 is a side view in elevation with parts broken away and in section of the gun tacker with the operating handle depressed and the main spring compressed for initiating the ejection of a staple from the apparatus,

Fig. 4 is a front view in elevation and in section of the gun tacker viewed through the plane 4—4 designated in Fig. 2,

Fig. 5 is a view in cross section of the gun tacker on the plane 5—5 designated in Fig. 2,

Fig. 6 is a view in perspective of the front jaw of the gun tacker,

Fig. 7 is a fragmentary side view in elevation of a removable slide and staple feeding means for the gun tacker employed to guide and retain staples as they are fed to the front jaw,

Fig. 8 is a fragmentary bottom view of the removable slide and staple feeding means of the gun tacker shown in Fig. 7, and

Fig. 9 is a fragmentary view in section of a portion of the apparatus viewed through the plane 9—9 shown in Fig. 3.

Referring now to the drawings, there is shown a developed sheet metal frame 1 that functions as both a housing and a support for the other elements of the tacker. The frame 1 may be described as channel shaped with a narrow base web 2, extending for the length of the tacker, that presents a smooth flat under surface that may be brought to bear firmly against a work surface, and a pair of parallel closely spaced sides 3 that rise upwardly from the base 2, that are open to provide a grip for an operator and to permit the insertion of a cartridge of staples. At the head end of the tacker is a vertical front wall 4, that forms an integral part of the frame 1 extending between the sides 3 from the top of the frame 1 downwardly for roughly two-thirds the height of the frame.

A staple track 5 in the form of an upwardly opening channel is fixed to the upper side of the base 2 and extends for the length of the frame 1, with the flanges 6 of the track 5 uniformly spaced from the sides 3 of the frame 1. The staple track 5 is of a height and width to receive and support a plurality of staples 7, with the legs of the staples 7 closely overhanging the flanges 6

so that the staples 7 may be freely slid along the track 5 while being retained from turning or twisting. Housing the staple track 5 and the staples 7 is a slide 8, that may be removed from the tacker and clearly shown in Figs. 7 and 8. The slide 8, also of channel shape, has downwardly turned flanges 9 passing between the staples 7 and the sides 3 of the frame 1. Like the staple track 5, the slide 8 is of a length equivalent to that of the base 2 of the frame 1, and when housed within the frame 1, as shown in Figs. 1, 2 and 3, the ends thereof are flush with both the ends of the base 2 and the staple track 5.

The slide 8 is provided with a rear aperture 10 and a front aperture 11, clearly shown in Fig. 8, for engagement with a slide catch 12, shown in Fig. 1, that is pivoted about a pin 13 extending between the sides 3 at the rear of the frame 1. The slide catch 12 is biased downwardly by a spring 14 to engage depending catch ears 15 that are an integral part of the catch 12, within either of the apertures 10, 11. With the slide 8 fully housed in the frame 1 the rear aperture 10 is aligned with the catch ears 15 and the ears 15 drop into the aperture 10 to restrain the slide 8 from shifting position. To draw the slide 8 rearwardly from the frame 1 the catch 12 is first raised. The slide 8 is then moved rearwardly, by manual engagement, and the catch ears 15 will bear against the top of the slide 8 until the front aperture 11 is brought beneath the ears 15. The ears 15 then engage in the aperture 11 to restrain continued rearward movement. If desired, the slide 8 may be fully removed from the frame 1 by again raising the catch 12 and drawing the slide 8 from between the frame sides 3. With the slide 8 drawn rearwardly, to the position wherein the catch 12 engages the aperture 11, the staple track 5 is exposed and a supply of staples 7 may be placed thereon by insertion through the openings of the sides 3.

Retained within the slide 8 is a short channel shaped staple feeder 16 that slidably engages the inner faces of the slide flanges 9 and the web extending between the flanges 9. When the slide 8 is housed in the frame 1 the feeder 16 fits closely alongside the flanges 6 of the staple track 5, for engagement with the rearmost staple 7. The stapler feeder 16 is provided with a spring abutment 17 that extends between the flanges 6 of the staple track 5, and a second spring abutment 18 is formed at the rear of the slide 8. A guide rod 19 passes through the rear spring abutment 18 and extends forwardly through the spring abutment 17 to terminate just short of the forward end of the slide 8. Encircling the guide rod 19 is a feeder spring 20 that is held in compression between the abutments 17, 18 to urge the staple feeder 16 toward the forward end of the slide 8 as shown in Figs. 7 and 8. To block the feeder 16 from a further movement forward a pair of stops 21 are extended from the sides of the feeder 16 to engage the flanges 9 of the slide 8.

Upon loading the tacker with a supply of staples 7 the staple feeder 16 will be held rearwardly, by reason of its engagement with the staples 7, as the slide 8 is moved into the fully housed position of Figs. 1, 2 and 3. The spring 20 is accordingly compressed between the abutments 17, 18 to present a bias force that urges the feeder 16 forwardly to feed the staples 7 toward the head end of the tacker as they are each in turn ejected from the tacker.

Spaced behind the front wall 4 at the head end of the tacker is a vertically disposed guide plate 22. The upper end of the guide plate 22 has a pair of sidewardly extending ears 23 that are received in complementary notches in the sides 3 of the frame 1. As is clearly shown in Fig. 5, the upper portion of the guide plate 22 extending downwardly from the ears 23 is of a width to fit snugly between the sides 3. For approximately the lower three quarters of the guide plate 22 the width is reduced to provide access openings 24 between the sides 3 and the plate 22. The bottom end 25 of the guide plate 22 terminates directly above the slide 8, and acts to retain the forward end of the slide 8 against the floor 2 of the frame 1.

Disposed a small distance above the bottom termination of the guide plate 22 is a horizontal stop plate 26 that is notched at its forward corners 26', as shown in Fig. 9, to present ends of reduced width that are held within complementary notches in the sides 3 of the frame 1. The bottom end 25 of the guide plate 22 abuts the rear edge of the stop plate 26 and a tubular pin 27 passes behind the bottom end 25 and is received by the sides 3. The pin 27 is inserted through the sides 3 and against the plate end 25 with a drive fit that retains the bottom end 25 firmly against the stop plate 26 to preclude movement of either. Adhered to the upper surface of the stop plate 26 is a resilient cushion 28 of a suitable material, such as a vulcanized rubber, to absorb shock impulses delivered to the frame 1 upon the ejection of a staple from the tacker, in a manner to be described.

The front wall 4 and the guide plate 22 together with the portions of the sides 3 extending rearwardly from the front wall 4 to the plate 22 form a partially closed chamber 29 of rectangular cross section. Disposed within the chamber 29 for vertical movement is a driving plunger 30, that is guided in its movement by a loose fit with the front wall 4, the guide plate 22 and the side walls 3. Forming an upward extension of the plunger 30 is a stem 31 that is encircled by a main spring 32. As shown in Fig. 2, the plunger 30 may rest upon the resilient cushion 28, and as shown in Fig. 3, the plunger 30 may be raised from this position of rest to cause a compression of the spring 32. Portions of the side faces of the plunger 30 are recessed, as at 33, to provide abutment ridges 34 and abutment bosses 35 on each side of the plunger 30. The front face of the plunger 30 is also recessed to receive a thin driving blade 36. The upper end of the driving blade 36 is notched and held in interlocking engagement with bosses 37 projecting at the front of the plunger 30 by reason of the recess of the front face. The upper edge of the blade 36 abuts against a ridge 38, also formed at the front of the plunger 30 by reason of the recess. The blade 36 moves in unison with the plunger 30 as though it were an integral extension thereof and the transmittal of staple driving forces derived from the spring 32 are transmitted through the plunger 30 to the blade 36.

When the plunger 30 is in its lower position, as shown in Fig. 2, the lower end of the blade 36 is disposed flush with the lower surface of the base 2 of the frame 1, and when the plunger 30 is raised to the position shown in Fig. 3 the lower end of the blade 36 is disposed at a level slightly above the tops of the staples 7 to permit the forwardmost staple 7 to be moved forwardly, by the action of the staple feeder 16, into a position directly beneath the blade 36. In its vertical travel the blade 36 is guided by the forward edge of the stop plate 26, and also the forward ends of the staple track 5 and slide 8.

A shim 39 having a configuration like that of the top portion of the blade 36 is also in interlocked engagement with the plunger 30. The shim 39 is employed to supplement the thickness of the driving blade 36 for firmly holding the blade 36 between the plunger 30 and the front wall 4 and prohibiting a twisting or turning of the upper end of the blade 36. The use of a shim 39 allows driving blades of varying thickness to be inserted in the tacker. The size of the staple employed may then be selected to suit a particular job and the driving blade may be matched to the staple. Upon insertion of a driving blade of changed thickness, the shim to be employed will accordingly be of changed thickness. Also, it is to be understood that the additional shim 39 may be dispensed with when the driving blade employed is of a thickness equal to the depth of the recess at the front of the driving plunger 30.

A front jaw 40 having a configuration clearly shown in

Fig. 6, is attached at the front of the frame 1. The jaw 40 includes a cover plate 41 for the chamber 29 that takes the reaction of the main spring 32, and a pair of sides 42 extend downwardly from the cover 41 alongside the outer surfaces of the sides 3 of the frame 1. The bottom ends of the sides 42 are substantially flush with the undersurface of the base 2, and the bottom portion of each side 42 is of increased width to present a hook 43. Extending between the lower front margins of the sides 42 is a slide track 44 that closes the lower front of the chamber 29 when the jaw 40 is assembled upon the frame 1. The inner face of the track 44 has a recess 45, clearly shown in Fig. 6, to present a slide for the blade 36 to reciprocate within. The recess 45 is of a width that complements both a staple 7 and the blade 36, which are of substantially equal width.

In placing the front jaw 40 in assembled position the cover plate 41 is placed above the spring 32 and then pressed downwardly upon the upper end of the spring 32 to beneath the normal position shown in Figs. 1–5. The sides 3 of the frame 1 are cut out to permit this depression of the cover 41, and the hooks 43 are then swung rearwardly beneath the protruding ends of the tubular pin 27. Downward pressure on the cover 41 is released and the spring 32 is allowed to move the front jaw 40 upwardly. The hooks 43 rise into a bearing engagement with the pin 37, as shown in Figs. 1 and 5. The pin engaging surfaces of the hooks 43 slope upwardly and rearwardly with a resulting caming action between the pin 27 and the hooks 43 that draws the lower end of the front jaw 40 rearwardly as the spring 32 lifts the jaw 40 upwardly. Hence, the slide track 44 is brought against the driving blade 36 to firmly confine the blade 36 in a guided stroke free of unwanted side play. The extent to which the front jaw 40 is drawn rearwardly by the camming action between the pin 27 and the hooks 43, is limited by abutment of the recess 45 of the slide track 44 against the front face of the blade 36. Thus, the thickness of the blade 36 determines position of the slide track 44 and blades of varied thickness may be employed, as has hereinbefore been noted.

A tubular pivot pin 46 is extended between and received in the sides 3 of the frame 1 at a position behind the guide plate 22, and pivotally mounted upon the pin 46 is a pair of lifting cams 47. Each lifting cam 47 has a forwardly extending toe 48 that extends through an access opening 24 and between an abutment ridge 34 and boss 35 on a side of the driving plunger 30. The upper ends of the lifting cams 47 are connected by a latch pin 49, and upon a movement of the pin 49 the cams 47 will pivot in unison about the pin 46.

A mounting pin 50 at the upper rear of the frame 1 extends between and pierces the sides 3 to overhang the frame 1 a sufficient distance to receive a manually engageable operating handle 51. The handle 51 extends forwardly from the pin 50 toward the head end of the tacker and is saddle shaped with a central portion 52 against which manual operating pressure is to be exerted and a pair of downwardly extending sides 53 that pass to the outside of the sides 3 of the frame 1. The operating handle 51 may be pivoted between a raised position, as shown in Fig. 1, and a lowered position, as shown in phantom in Fig. 3, wherein the web 52 comes to rest upon the upper edges of the sides 3.

Pivoted upon the mounting pin 50 and disposed between the frame sides 3 is a pair of bell cranks 54. Each bell crank 54 has an upper leg 55 within the handle 51 that supports the web 52, and which is depressed upon a downward pivot of the handle 51. Downwardly extending arms 56, that form an integral part of the bell cranks 54, are joined together at the lower ends by means of a pin 57. Supported on the portion of the pin 57 extending between the bell crank arms 56 is one end of a release link 58. The release link 58 extends forwardly from the pin 57 toward the lifting cams 47, so that a depression of the handle 51 causes a pivot of the bell cranks 54 to draw the pin 57 to the rear, and hence to translate the release link 58 rearwardly from the head end of the tacker.

The release link 58 is shaped in the form of a catch 59, at its forward end, adapted to engage with the pin 49 extending between the lifting cams 47, as shown in Figs. 1 and 3. To retain the forward end of the release link 58 in an elevated position, in which engagement of the pin 49 may be made, a bias spring 60 attaches at one end to the link 58 and extends upwardly therefrom to a connection with the upper edge of the guide plate 22. Just to the rear of the connection of the spring 60 with the link 58 is a handle engaging abutment 61 that rises above the rest of the release link 58 to provide an engagement surface to be struck by the web 52 of the handle 51, as the handle 51 is depressed into the position shown in Fig. 3.

To operate the tacker, it is brought to bear upon the work surface. In some instances the entire length of the base 2 of the frame 1 is seated firmly against such work surface, while in other instances it is only possible to bear the head end portion of the base 2 against the work. The operating handle 51 and the openings in the frame sides 3 present a pistol like grip by which the operator may grasp the apparatus and orientate it in the work position readied for a depression of the handle 51. The handle 51 is now moved toward the frame 1 by application of pressure to the the topside of the web 52. It is not necessary to squeeze the handle 51 and frame sides 3 together. Instead a pressure upon the handle 51 is sufficient, since this pressure is directed toward the lower end, from which a staple is to be ejected, to retain the tacker firmly against the work. Depression of the handle 51 draws the pin 57, and hence release link 58, rearwardly, as hereinbefore described. The catch 59 at the forward end of the release link 58, which is held in engagement with the pin 49 by reason of the bias spring 60, is likewise moved rearwardly to cause a pivot of the lifting cams 47. The turning movement of the lifting cams 47 raises the forwardly extending toes 48, which carry the driving plunger 30 upwardly to load the main spring 32 in compression between the plunger 30 and the cover 41 of the front jaw 40.

Continued depression of the handle 51 brings the underside of the web 52 into engagement with the abutment 61 of the release link 58, as is shown in Fig. 3. A further movement of the handle 51 moves the release link 58 downwardly and the catch 59 at the forward end of the link 58 will be disengaged from the pin 49. Upon this disengagement, the lifting cams 47 are free to pivot and no longer restrain the main spring 32 in compression. Consequently, the main spring 32 is now free to release its stored energy and rapidly drive the plunger 30 downwardly. Downward travel of the plunger 30 brings the lower edge of the blade 36 downwardly upon the foremost staple 7, which is within the recess 45 of the front jaw 40. This staple 7 is carried downwardly and forceably ejected from the jaw 40, to pierce the work piece.

As the driving plunger 30 is driven downwardly, the lifting cams 47 move therewith in unison to be returned to the position in Figs. 1 and 2. The movement of the plunger 30 is arrested upon impact with the resilient cushion 28. A sharp blow is thus delivered to the frame 1, and the reaction of the frame 1 against the work piece will tend to urge the tacker to rebound. However, as the handle 51 was brought downwardly the web 52 was brought into engagement with the frame 1 at the end of the stroke of the handle 51. The operator is then firmly pressing the frame 1 of the tacker against the work piece as the force of the spring is delivered through the plunger 30 to the cushion 28. The rebound movement of the tacker will be minimized and the adsorption of the impact is accomplished with a minimum of strain to the operator's hand and forearm, to reduce shock movement. To aid in effectively smothering rebound of the tacker the handle 51 is carried forwardly of its mounting pin 50 in a manner that the operating pressure is delivered to the head end of the apparatus.

The invention presents guide members for the driving blade **36** that align the blade end with each staple to be driven to reduce jamming or fouling in the jaw of the tacker. The front jaw **40** is mounted so that the lower end is resiliently urged rearwardly in response to the compressive force of the spring **32** by the camming action between the hooks **43** on the lower end of the jaw **40** and the pin **27**. The camming action causes the vertically applied spring bias to be directed with a horizontal component that draws the slide track **44** of the jaw **40** firmly against the blade **36**. The blade **36** in turn, is held against guide surfaces such as the stop plate **26** and the forward ends of the staple track **5** and slide **8**. Movement of the blade **36** is confined to a vertical travel with little or no side play. Each staple to be driven is urged, by reason of the bias of the spring **20**, against the recess of the slide track **44**, and the blade **36** being likewise disposed in the slide track **44** will meet the staple to be ejected squarely. The blade **36** is thus precluded from sliding to the side of a staple to cause fouling in the jaw.

The tacker of this invention may be operated with the inducement of a minimum of fatigue to the operator. As has been hereinbefore stated, a pressure upon the handle **51** will operate the tacker. Such pressure may be delivered by the hand and forearm, and is in direct contrast to a squeeze of the fingers as is required in usual tacker constructions. The usage of the hand and forearm reduces fatigue, and the advantageous adsorption of reactive forces due to the impact of the operating spring **32**, as has been noted, also works a reduction of the fatigue factor.

I claim:

1. In a tacking machine the combination comprising a frame with a head end and a pivot mounting for an operating handle remote from the head end, a reciprocable staple ejecting driver carried by said head end movable toward the bottom of said frame in a staple ejecting stroke, a spring abutment attached to the frame, a main spring captively held between said driver and spring abutment adapted to urge said driver in a staple ejecting stroke, an operating handle pivotally mounted on said pivot mounting of said frame with a manually engageable portion above said frame extending from the pivot mounting toward said head end, and an operating linkage interposed between said handle and said reciprocable driver to move said driver against said spring to compress the same upon pivoting said handle downwardly toward the bottom of said frame, which linkage includes latch and catch members disengageable from one another to break the linkage one of which members is positioned to be struck by said handle upon completion of a downward movement of said handle to release said spring for moving said driver in a staple ejecting stroke.

2. In a tacking machine the combination comprising a frame with a head end and a mounting for an operating handle remote from the head end, a reciprocable staple ejecting driver carried by said head end movable toward the bottom of said frame in a staple ejecting stroke, a spring abutment at the head end, a main spring interposed between said abutment and said driver and compressible therebetween to urge said driver in a staple ejecting stroke, an operating handle secured to said mounting of said frame with a manually engageable portion overlaying said frame extending between the mounting and said head end depressable into contacting engagement with said frame, and an operating linkage interposed between said handle and said reciprocable driver to move said driver against said spring upon depressing said handle downwardly toward the bottom of said frame, which linkage includes engageable latch and catch members one of which underlies said handle to be struck thereby for disengagement of the members and the other of which engages said driver whereby downward movement of the handle breaks the linkage as the handle moves into adjacency with the frame to permit said spring to move said driver in a staple ejecting stroke.

3. In a tacking machine the combination comprising a frame, a reciprocable driver carried by said frame movable in a downwardly directed staple ejecting stroke and in a loading motion, a pivoted operating handle supported by said frame, a pivoted lifting member cooperatively engaged at one end with said driver to move said driver in said loading motion and having a latch at the opposite end, a catch member engaged with said handle to be moved thereby and cooperatively engageable and disengageable with said latch of said lifting member for pivoting the same to move said driver in said loading motion upon a movement of said handle, said catch member including an abutment disposed in the path of said handle upon said handle being moved to complete a cocking motion of said driver, and a bias spring adapted to retain said catch member in a position for cooperative engagement with said latch of said lifting member for transmitting motion from said handle to said driver, a movement of said handle against said abutment shifting said catch member to a position of disengagement with said latch of said lifting member to free said driver for a staple ejecting stroke.

4. In a tacking machine the combination comprising a frame having a head end and a remote end, a reciprocable staple driver carried by said head end, a main spring held captive in said head end urging said driver in a staple ejecting direction of motion, a lifting member cooperatively engaged with said driver having a portion movable towards the remote end of said frame and adapted to elevate said driver against said spring upon such a movement of said portion, a depressable handle mounted on the remote end of said frame and overhanging the same, a link member extending beneath said handle from said lifting member toward the remote end of said frame movable toward and away from the remote end and also movable between depressed and elevated positions whereby engagement may be made with said lifting member upon assuming an elevated position, a bias spring urging said link member toward elevated position, and an engagement between said handle and said link member to draw said link member to the remote end upon depression of said handle, whereby continued depression of the handle strikes the link member and depresses the same.

5. In a tacking machine the combination comprising a frame, a reciprocable staple driver including a staple engaging blade having front and rear sides that is downwardly movable in a staple ejecting stroke and upwardly movable in a spring loading motion poising said blade for a staple ejecting stroke; a guide fixed with respect to said frame to the rear of said blade presenting a surface against which the blade slides in its upward and downward movement; a camming element to the rear of said blade fixed with respect to said frame with a camming surface facing obliquely downward and to the rear; a main spring adapted to urge said driver downwardly through said staple ejecting stroke; and a one piece movable jaw including a guide for said blade and for a staple to be driven by said blade disposed to the front side of said blade, a spring retaining abutment cooperatively engageable with said main spring to retain the spring captive intermediary said abutment and said driver and to receive a bias force from the spring that urges an upward displacement of said jaw, and a cam portion engageable with said camming surface of said camming element thereby drawing said jaw toward said blade in response to said spring for confining the blade in its movement.

6. In a tacking machine the combination comprising a frame, a staple driver including a staple engaging blade having front and rear sides that is reciprocably movable in a staple ejecting stroke and in a spring loading motion poising said blade for a staple ejecting stroke; a guide fixed with respect to said frame to the rear of said blade;

a camming element to the rear of said blade fixed with respect to said frame and having a camming surface facing obliquely downward and to the rear; a main spring adapted to urge said driver through said staple ejecting stroke; and a one piece movable jaw including a guide for said blade and for a staple to be driven by said blade disposed to the front side of said blade, a spring retaining abutment cooperatively engageable with said main spring to retain the spring captive intermediary said abutment and said driver and to receive a bias force from the spring that urges a displacement of said jaw, and a cam surface engageable with said camming surface of said camming element restraining said jaw from movement in response to said spring and directing said jaw toward said fixed guide for confining the blade in its movement.

7. In a tacking machine the combination comprising a frame, a staple track on said frame adapted to receive a cartridge of staples adhered to one another in a row and terminating in an end from which a staple at the end of a row of staples may overhang and be moved across in an ejected motion transversely of the guide track; a staple driver carried by said frame including a staple engaging blade reciprocably movable in a staple ejecting stroke passing said blade across the end of said staple track to drive the staple overhanging the end of the track from the machine and in a spring loading motion poising said blade above the end of said staple track; a fixed guide against which the blade slides that is supported by said frame in a position above said track and to the same side of the blade as said track; a camming element fixed with respect to said frame that is disposed to the side of said blade to which said fixed guide is disposed and presents camming surfaces facing obliquely downward and away from the blade; a main spring adapted to urge said driver through said staple ejecting stroke; and a one piece movable jaw including a guide for said blade and for a staple overhanging said track disposed to the side of said blade opposite said fixed guide and spaced from the end of said track to permit a staple overhanging the track to pass between the guide and track, a spring retaining abutment cooperatively engageable with said main spring to retain the spring captive intermediary said abutment and said driver and to receive a bias force from the spring that urges a displacement of said jaw, and a cam surface that faces obliquely upward and toward said blade engageable with said camming element restraining said jaw from movement in response to compression forces of said spring and directing said jaw toward the end of said track and said fixed guide for confining the blade for guided movement thereof.

8. In a tacking machine the combination comprising a frame; a reciprocable staple driver carried at one end of said frame including a staple engaging blade movable downwardly in a staple ejecting stroke and movable upwardly in a spring loading motion; a fixed guide on said frame to one side of said blade presenting a surface against which the blade slides in its reciprocal movement; a fixed camming element on said frame to the same side of said

blade as said guide; a main spring adapted to urge said driver downwardly; an operating handle mounted by said frame at a point remote from said driver with a manually engageable portion extending from the mounting toward said driver; an operating linkage cooperatively engaging said handle with said driver to load said spring upon a movement of said handle that includes a releasable latch that disengages the handle from said driver upon a completion of a movement of said handle to permit said spring to move said driver and blade in a staple ejecting stroke; and a one piece movable jaw including a guide for said blade and for a staple to be driven by said blade disposed to the side of said blade opposite said fixed guide, a spring retaining abutment cooperatively engageable with said main spring to retain the spring captive intermediary said abutment and said driver and to receive a bias force from the spring that urges a displacement of said jaw, and a cam surface engageable with said camming element that faces obliquely upwardly toward the guide portion of the jaw thereby restraining said jaw from movement in response to said spring and directing said jaw toward said fixed guide for confining the blade in its movement.

9. In a tacking machine the combination of a frame having a head end and a bottom face adapted to be rested against a surface, an operating handle mounted on said frame depressable toward the bottom of the frame, a staple ejector reciprocably mounted in the head end for movement toward and away from said bottom, a link member shiftable in a direction parallel to said bottom that is linked with said handle to be moved away from the head end upon depression of the handle and that is displaceable downwardly toward the bottom of the frame with an abutment positioned to be struck by said handle and moved in the downward direction after a substantial depression of the handle, and an ejector lifting member adapted to raise the ejector away from said bottom and engageable with said link member whereby upon a movement of said link member away from said head end said lifting member raises said ejector, said link and lifting members being formed at their engagement as a catch and latch whereby a downward movement of the link member in response to said handle breaks the catch and latch engagement.

10. A tacking machine in accordance with claim 9 in which the operating handle bears against the frame upon striking the link member for disengaging the latch and catch of said link member and the lifting member.

References Cited in the file of this patent

UNITED STATES PATENTS

1,705,819	Kruse	Mar. 19, 1929
2,154,755	Krantz	Apr. 18, 1939
2,206,460	Hansen	July 2, 1940
2,285,512	Harley	June 9, 1942
2,300,277	Hansen	Oct. 27, 1942
2,326,540	Krantz	Aug. 10, 1943
2,603,782	Spencer	July 22, 1952