2 Sheets—Sheet 1.

H. E. WOODFORD.

HORSESHOE-NAIL MACHINES.

No. 194,393. Patented Aug. 21, 1877.

FIG. 1.

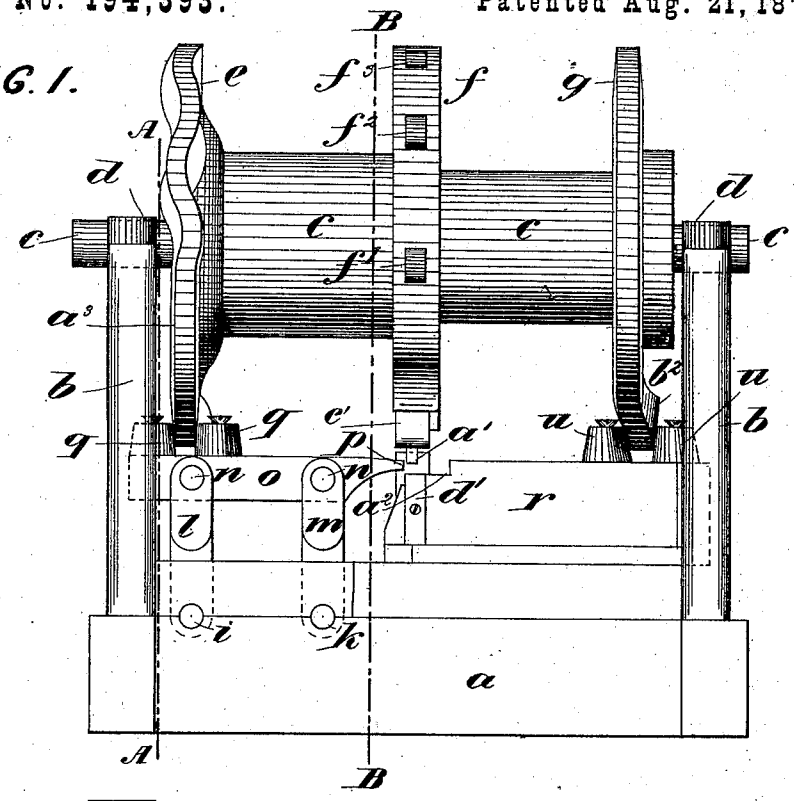

FIG. 2.

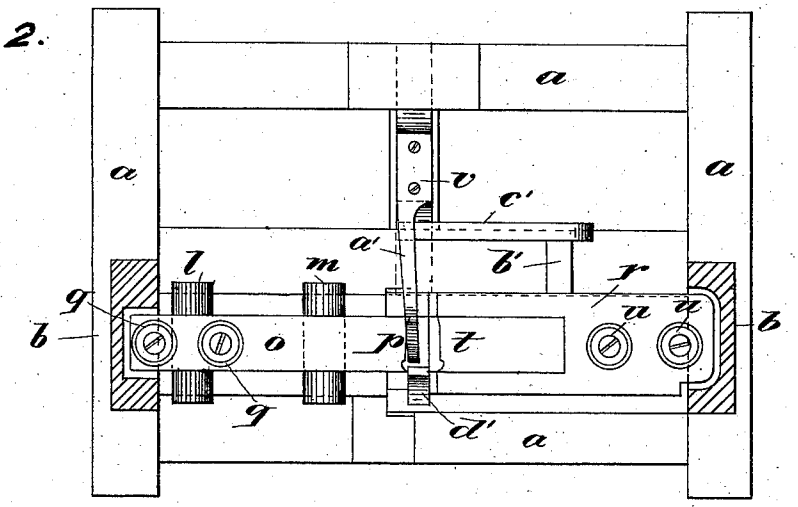

Witnesses
Charles G. L. Simpson
John A. Reinicke

Inventor.
H. Evan Woodford.

N. PETERS, PHOTO-LITHOGRAPHER, WASHINGTON, D. C.

2 Sheets—Sheet 2.

H. E. WOODFORD.

HORSESHOE-NAIL MACHINES.

No. 194,393. Patented Aug. 21, 1877.

FIG. 3.

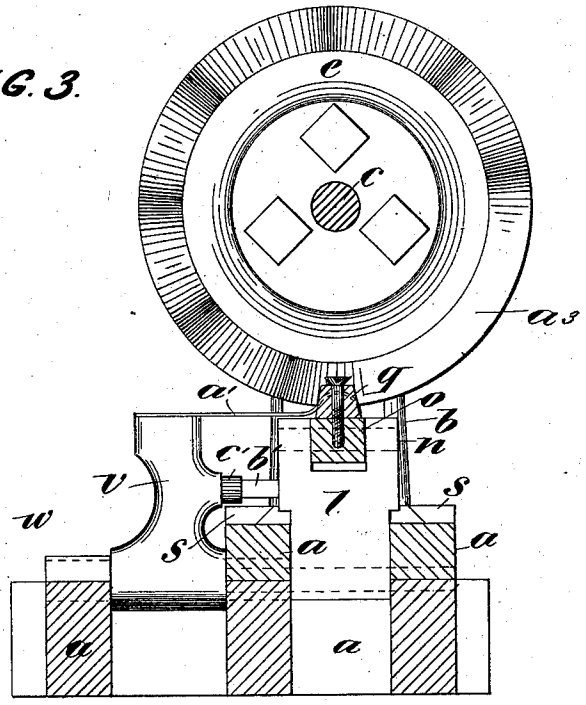

FIG. 4.

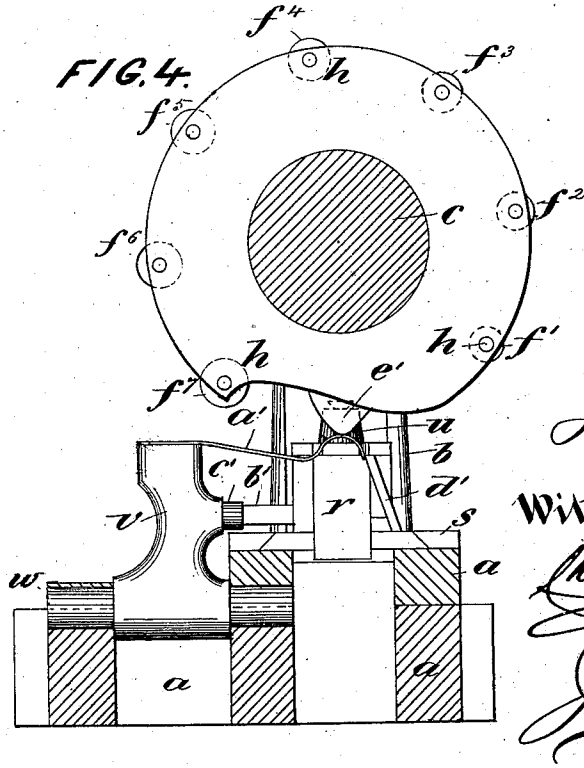

Inventor.

H. Evan Woodford

Witnesses.

Charles G. L. Simpson

John A. Reinig

N. PETERS, PHOTO-LITHOGRAPHER, WASHINGTON, D. C.

UNITED STATES PATENT OFFICE.

HENRY E. WOODFORD, OF MONTREAL, QUEBEC, CANADA.

IMPROVEMENT IN HORSESHOE-NAIL MACHINES.

Specification forming part of Letters Patent No. **194,393**, dated August 21, 1877; application filed June 13, 1877.

To all whom it may concern:

Be it known that I, HENRY EVAN WOODFORD, of the city and district of Montreal, Province of Quebec, Canada, have invented certain new and useful Improvements on Horseshoe-Nail Machines; and I do hereby declare that the following is a full, clear, and exact description of the same.

This invention has reference to improvements on machines for manufacturing horseshoe-nail blanks, which are afterward formed into complete nails; and has for its object the construction and arrangement of a machine capable of striking graduated blows in forming the blanks, more simple and durable than any of the machines at present in use.

Many inventions of a somewhat similar mechanism have been made, notably that for which Letters Patent of the United States were granted to James Mills, October 3, 1876, and to H. E. Woodford, Sr., and Charles W. Woodford, October 30, 1866, both of which I disclaim, as also the mechanism patented by Dodge, and known as the "Dodge machine."

The principal feature of my invention is the arrangement of a disk provided with graduated rolls, so that the end of the nail-rod from which the blanks are formed being struck by the first roll, it is drawn out the amount due to the position of that roll. The next roll is set out slightly farther from the center of revolution of the disk, by which means it further forms or draws out the blanks, and so on. Each succeeding roll with which the disk is provided, being set farther out from the center, takes its proper share of the work of forming the blank. Between each of the blows struck by the rollers, as above described, the side dies act, striking on the side of the blank, and preventing it from being spread out in that direction.

The action above described has heretofore been given by a graduated revolving anvil, which I altogether disclaim.

The work has also been done in the Dodge machine by a single roller, which strikes a blow reducing the nail-rod from which the blanks are formed to the thickness required all at once, and, by the one blow and the part of the rod so reduced to a thin plate, is acted upon by side dies to upset it sidewise. This often causes the so-reduced portion of the bar to buckle instead of upset, thus forming what is commonly known as "spoon nails," in consequence of which a superior quality of iron is required to stand the action of the side dies and roller, and even then, with the very best quality of iron, a considerable percentage of the nails are imperfect or spoon nails.

Now, by my invention the nail-rod receives a blow from the first roller of the disk, which only draws it down a certain amount, after which it receives a blow from the side dies, upsetting it on the sides, and then a blow from the next roller of the disk, further reducing it, so that the drawing out of the nail or blank is done in a graduated and even manner, obviating the danger of making spoon nails and other imperfect nails, in this respect enabling a cheaper quality of iron to be used, and an equally good nail produced therefrom.

Another advantage of my machine is, that the blanks are cut off from the rod more quickly than the Dodge machine, where about eighteen revolutions of the machine are required to form and cut off the nail, while in my machine the nail is formed and cut off in one revolution of the main shaft.

In the drawings hereunto annexed, similar letters of reference indicate like parts.

Figure 1 is a front elevation of the invention. Fig. 2 is a plan view of Fig. 1, with shafting and cams, &c., removed. Fig. 3 is a section on line A A, and elevation looking toward the right of Fig. 1. Fig. 4 is a section on line B B, and elevation looking toward the right of Fig. 1.

Letter *a* is any suitable bed or frame-work, upon which the parts are erected. *b* are two uprights, carrying the shaft *c* in plumber-blocks *d*, upon which the disks *e*, *f*, and *g* are secured.

In the disk *f* are set rollers f^1, f^2, f^3, f^4, f^5, f^6, and f^7, each being provided with an axle, *h*. These are set so that the periphery of f^1 shall project the amount suitable for striking the first blow on the rod. f^2 is set a little farther out, suitably for drawing the rod a little more, and so on, each roller f^3, f^4, f^5, f^6, and f^7 are successively set a little farther out

from the center, the one more than the other, as they advance, so that f^7 will reduce the blank the required amount. The same effect may be produced by setting the rolls f^1 to f^7 at equal distances from the center and increasing their diameters; or the axles h may be set in slides adjustable by screws, wedges, or similar devices, by which their relative position may be adjusted and varied in the manner above described.

To the frame a is pivoted, at i and k, two arms, l and m, and attached to them by pivots n is a die, o, the end p of which is formed to the exact configuration to be given to one side of the blank, as clearly shown in Fig. 2. The die is further provided with two rollers, q, attached to it by pivots, upon which they freely revolve. These receive between them a portion of the edge of the disk e. The disk e is provided with seven corrugations, extending around about two-thirds of its circumference. They are in number equal to the number of the rolls f^1 to f^7, and are so situated that each corrugation, acting on the rollers q, will cause the die o to come forward and strike a blow on the portion of the nail-rod exposed to its action, as will be hereinafter more particularly described.

The corrugations above referred to will be so timed or situated that the blows of the die o will follow immediately after the blows of the rollers f^1 to f^7.

r is an anvil, situated in slides s formed in the bed a. t is a steel die, inserted in the anvil, forming the corresponding side die to the end p of the die o. u are two rollers, pivoted to the anvil r, and receiving between them the edge of the disk g, which is provided with one corrugation, b^2, so situated that it draws back the anvil immediately after the roller f^7 has struck its blow, and when the last corrugation on the disk e draws back the die o.

v is an arm, pivoted or journaled at w to the frame a, on the top of which is secured a spring-cutter, a^1. On the anvil r a projection, b^1, is formed, to which is attached a link or connecting-rod, c', the other end of which is pivoted to the arm v. On the front of the anvil r is secured a bed-cutter, d'. e' is a projection formed on the disk f, for operating the cutter a^1.

The feed mechanism, or means by which the nail-rod is introduced to the machine to be acted upon, is not delineated, inasmuch as the same forms no part of the said invention, and I will not enter into its description further than to say that it is of the ordinary character in use where the portion of the nail-rod required to form a blank is at once moved forward and fed to the machine, in contradistinction to those that have been used where the nail-rod is continuously fed forward, as in Letters Patent granted to A. Reese, February 2, 1869, No. 86,450.

Although seven rolls are shown in the disk f and seven corresponding corrugations for advancing and retiring the die o, as shown in the disk e, their number may be increased or diminished without materially changing the character of the invention, and for the purpose of causing the action of the side dies o and t to be graduated in their effect upon the nail.

The edges of the disk g may be formed slightly eccentric, to cause the anvil r to close up very slightly and gradually toward the die o during the revolution of the shaft c; or the same effect may be produced by the corrugations on the disk e being slightly increased, beginning with the one corresponding with the roller f^1, and increasing toward that corresponding with the roller f^7. Either or both of these means may be adopted for producing a graduated action of the side dies; and as the amount of action is so small and the increase of the corrugations on the dies are correspondingly small, it has been considered best, for clearness, not to attempt to show it in the drawings, and more especially as a part of my invention may be used with or without a graduated action of the side dies o and t.

The operation is as follows: The portion of the rod from which a blank is to be formed being introduced by the feed-mechanism and laid upon that part of the anvil r marked a^2 immediately after the corrugation b^2 of the disk g has passed the rollers u and the anvil r has been pushed forward and the part of it a^2 is immediately below the rollers f^1 to f^7, it is then acted upon by the rollers f^1 to f^7, and by the die o actuated by the corrugations of the disk e, as above described. As soon as the roll f^7 has acted upon the nail-blank the last corrugation of the disk e brings forward the die o and strikes the last blow on its side, and as the revolution of the shaft c goes on the passing of the last corrugation draws back the die o, and as about one-third, a^3, of the disk e is made plain, it remains drawn back and stationary during the passage of that part of the disk. Simultaneously with this last drawing back of the die o the cam-projection b^2 of the disk g draws back the anvil r and brings the cutter d' under the nail-rod, and the cutter a^1, which is connected by the bar c^1 to the anvil, over the nail-rod. The projection e' now depresses the cutter a^1 and causes it to cut off the blank, the cam-projection b^2 keeping the anvil r drawn back during the operation of the cutters, but immediately the projection e' has passed, and allows the cutter a^1 to spring up, the cam-projection b^2 will pass the rollers u and bring forward the anvil r, and the feed mechanism introduces the next portion of the rod to be formed into a blank.

Fig. 1 shows my invention in the position when the cutter a^1 is about to be depressed by the projection e', and Fig. 4 shows the cutter a^1 fully depressed.

What I claim is as follows:

1. The disk *f*, provided with graduated rollers, as described, in combination with the anvil *r*, provided with die *t*, reciprocating side die *o*, and cutter a^1 *d'*, substantially as and for the purposes set forth.

2. The combination of the anvil *r*, having cutter *d'* attached thereto, and disk *g*, having projection b^2, with the arm *v*, cutter a^1, and mechanism for operating said cutter, substantially as and for the purposes set forth.

3. The combination of the disk *f*, having graduated rolls, as described, and projection *e'*, with a sliding anvil, *r*, having cutter *d'* and cutter a^1 actuated thereby, and operated substantially as and for the purposes set forth.

Montreal, 7th day of June, A. D. 1877.

H. EVAN WOODFORD.

Witnesses:
CHARLES G. C. SIMPSON,
JOHN A. RENNIT.