March 29, 1960 R. H. LONG 2,930,586

DRILLING METHOD AND APPARATUS

Filed July 25, 1955 4 Sheets-Sheet 1

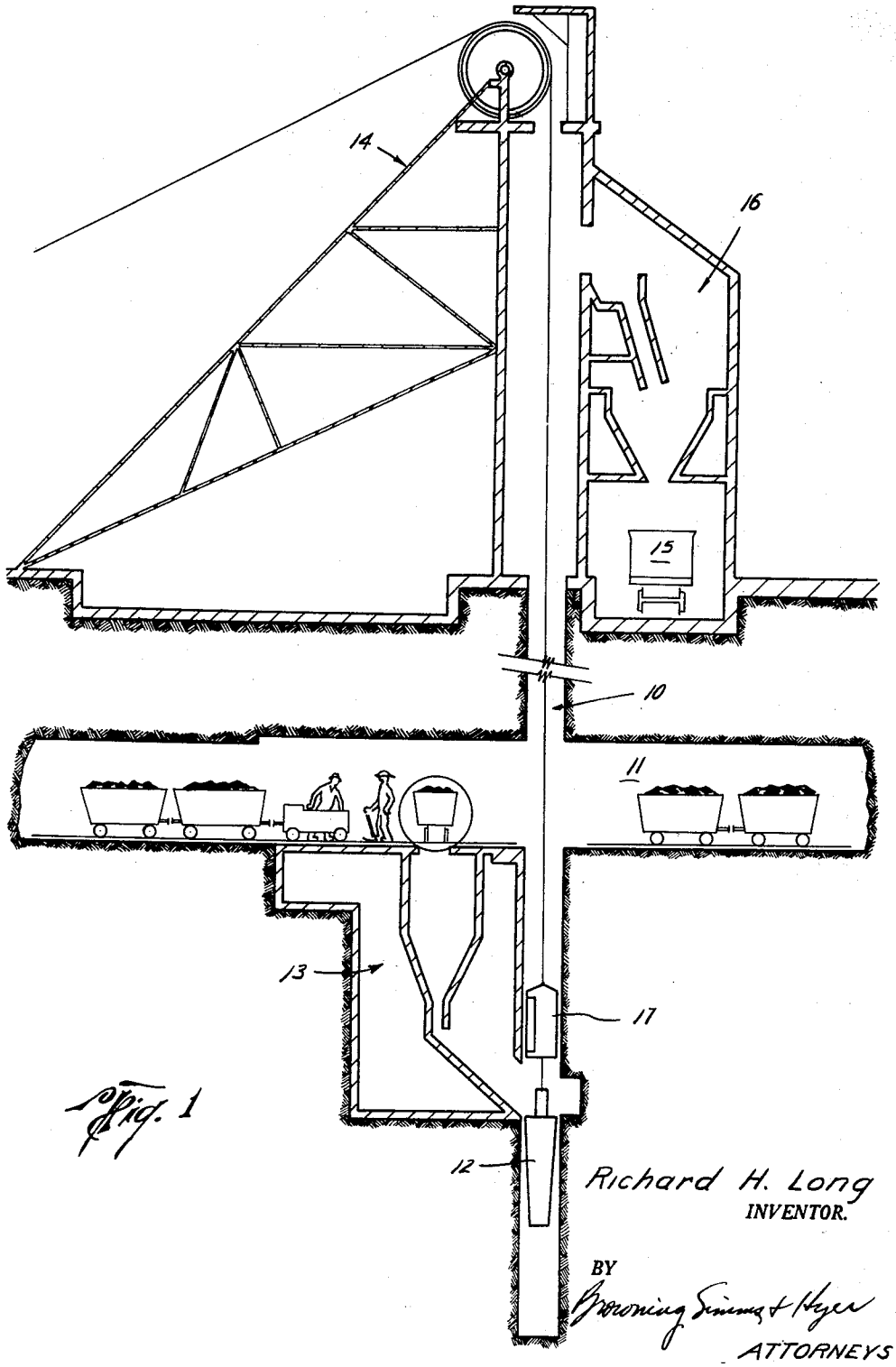

Fig. 1

Richard H. Long
INVENTOR.

BY
Browning Simms & Hyer
ATTORNEYS

March 29, 1960 R. H. LONG 2,930,586

DRILLING METHOD AND APPARATUS

Filed July 25, 1955

4 Sheets-Sheet 2

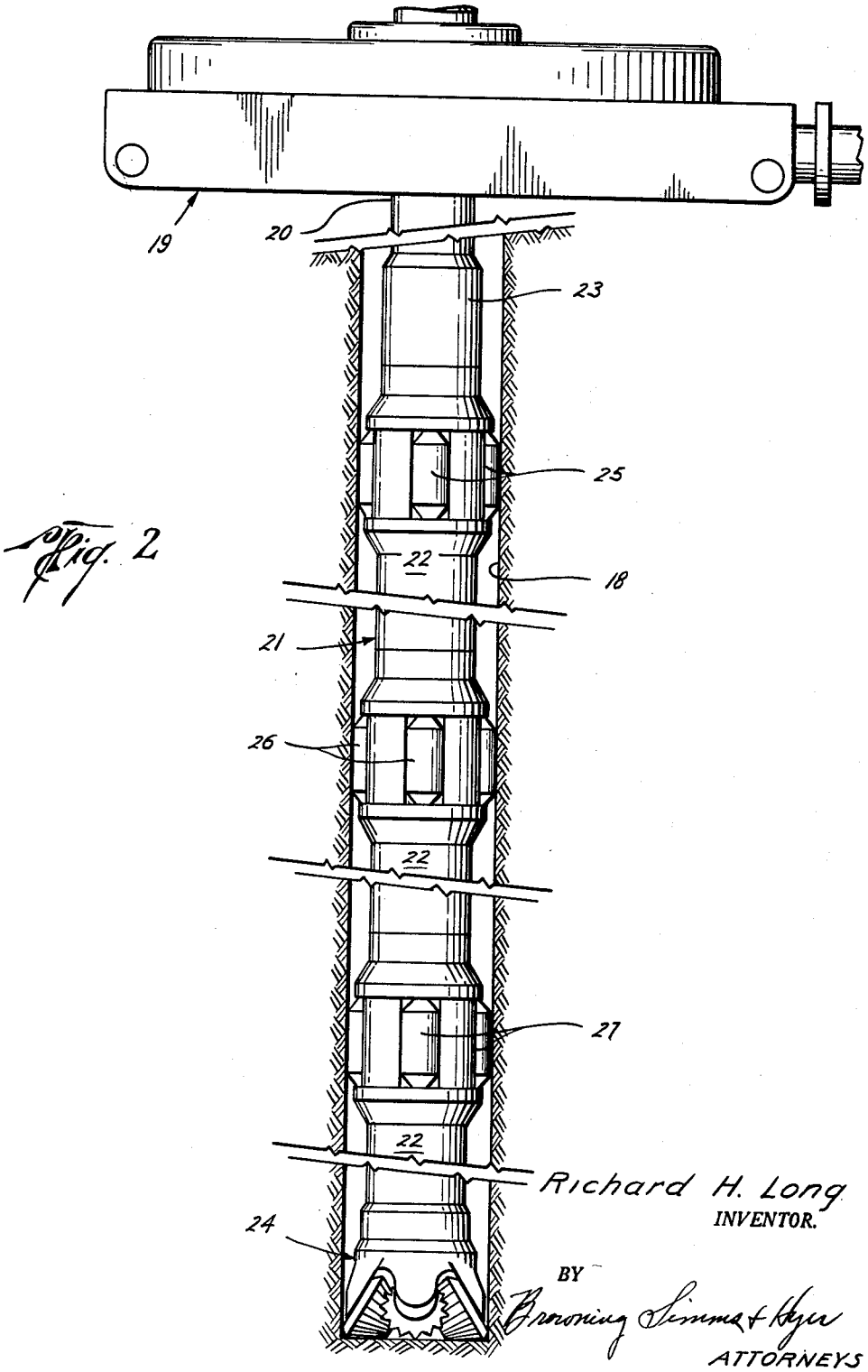

Fig. 2

Richard H. Long
INVENTOR.

BY
Browning Simmons & Hyer
ATTORNEYS

March 29, 1960 R. H. LONG 2,930,586

DRILLING METHOD AND APPARATUS

Filed July 25, 1955

4 Sheets-Sheet 3

Fig. 3

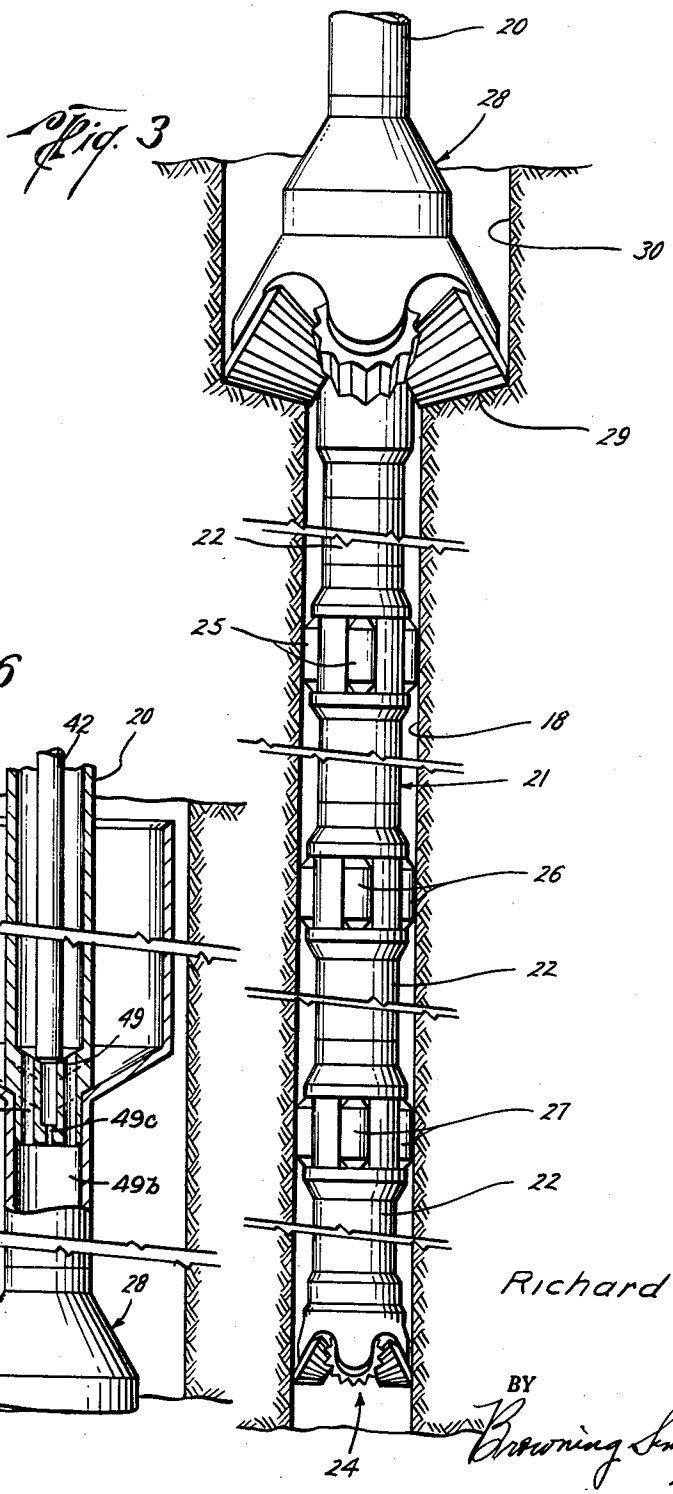

Fig. 6

Richard H. Long
INVENTOR.

BY

Browning Simmons & Hyer
ATTORNEYS

March 29, 1960 R. H. LONG 2,930,586

DRILLING METHOD AND APPARATUS

Filed July 25, 1955

4 Sheets-Sheet 4

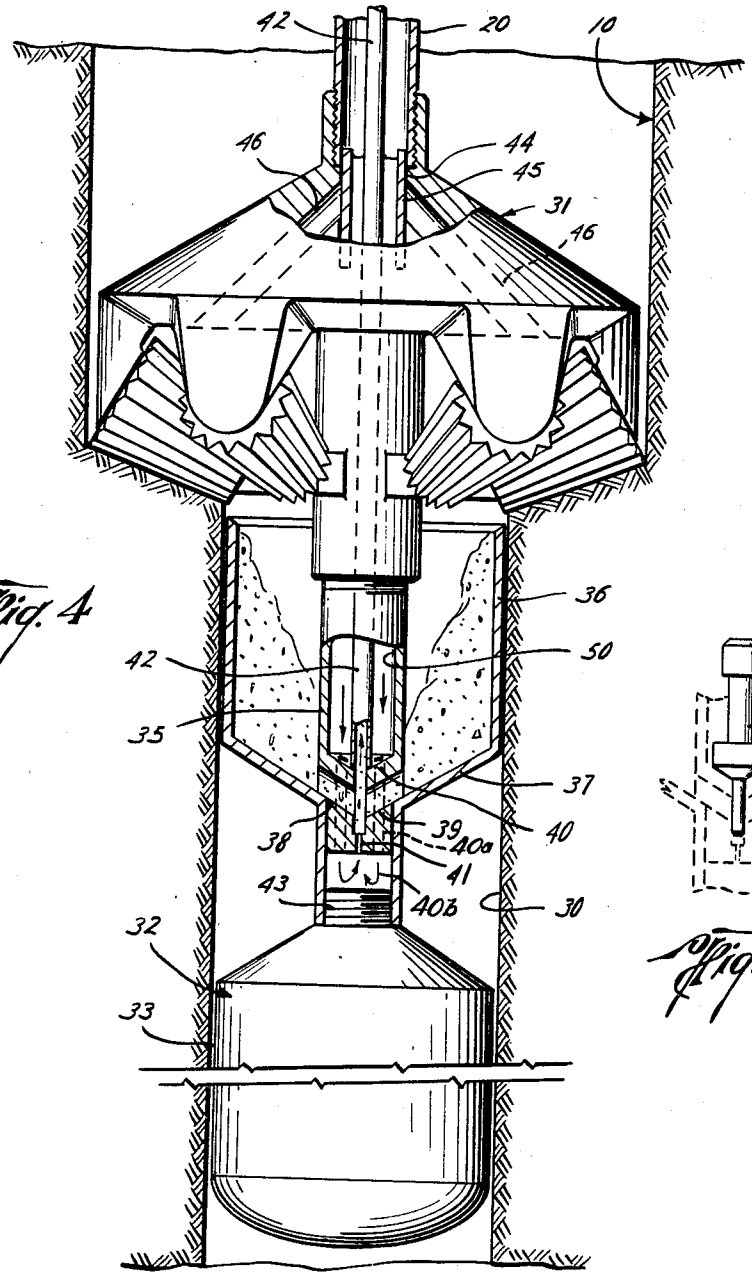

Fig. 4

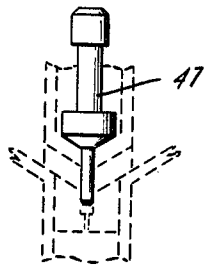

Fig. 5

Richard H. Long
INVENTOR.

BY
Browning Simms & Hyer
ATTORNEYS

United States Patent Office 2,930,586
Patented Mar. 29, 1960

2,930,586

DRILLING METHOD AND APPARATUS

Richard H. Long, Houston, Tex.

Application July 25, 1955, Serial No. 524,069

4 Claims. (Cl. 225—1.8)

This invention relates to a drilling method and apparatus, and more particularly to a method and apparatus for drilling a smooth wall straight hole in the ground of a size which may be used for a mine shaft.

In some types of mine operations, such as uranium mining, the deposits are not in continuous veins which may be worked for long periods of time, but tend to be found more in deposits which support a year or two of operation and then the deposit must be abandoned and operations shifted to a new location. As uranium is frequently found a considerable distance under the surface of the earth, the cost of sinking a plurality of mine shafts to work an area is substantial and the industry would be considerably benefited if this cost could be reduced.

The method previously used to sink such shafts involves manual digging through soft formations and blasting to penetrate hard formations. Spoil is removed by an elevator in the shaft. In hard formations the usual practice is to drill shot holes in the formation and blast. Shot holes are spaced at two foot intervals in the bottom of the hole immediately adjacent the wall of the hole and at two foot intervals over the bottom of the hole. Explosives are then placed in the holes adjacent the wall of the shaft and detonated. Men are then sent into the shaft to remove loose rock. Explosives are then placed in the remaining shot holes and detonated. Rock loosened by this blast is removed and the operation repeated. As men cannot remain in the shaft during detonation of the explosives, two trips to the surface are required to blast each vertical increment of the shaft. From the above it can be seen that work would be much faster and more economical if a continuous drilling method and apparatus such as used for oil, gas, and water wells could be devised to sink such shafts.

Rotary drilling methods and apparatus heretofore in use in drilling water wells, oil and gas wells, etc., however, are not usable. While the rotary drilling industry has known a method for drilling a small diameter pilot or rat hole straight down into the earth, the industry has not heretofore developed a method and apparatus for drilling a large diameter hole straight down into the earth. In a small hole the area of the bottom of the hole is relatively small and the hole can be deepened with but relatively small weight on the bit if the hole is drilled slowly. However, when the hole is of relatively large diameter, the area of the bottom of the hole is so large that the bit must by provided with thousands of pounds of extra weight to provide the downward force on the bit necessary to force it to penetrate the formation. The conventional way of providing such weight is to permit some of the weight of the drill string to be exerted upon the bit. The drill pipe is always smaller than the hole being drilled and the slenderness ratio of the pipe relative to the weight of the string is such that the string will bow adjacent the bit and in many instances will assume the form of a corkscrew while being rotated. As a result of the bowed, corkscrewed drill string, the bit tends to drill at an angle to the vertical and to drill a corkscrew hole.

A mine shaft must be vertical to permit its use as an elevator shaft to raise and lower men and equipment, and to remove ore from the earth. It also must be vertical and smooth to prevent cave-ins if the wall is not to be timbered, or cased. A rough wall is undesirable as protrusions from the wall will tend to break off and fall into the hole onto the elevator and men working below.

It is an object of this invention to provide a method and apparatus for drilling a mine shaft utilizing bits operated from the surface.

Another object is to provide a method and apparatus of sinking a mine shaft utilizing at least in part rotary bits in which the resultant shaft is smooth walled and vertical and in many instances need not be timbered or cased.

Another object of this invention is to provide a drilling method and apparatus utilizing at least in part rotary bits for drilling a straight smooth wall hole into the ground of a diameter suitable for use as a mine shaft.

Another object is to provide a method for rotary drilling a large diameter hole with a large diameter bit in which the weight for driving the bit into the formation is applied to the bit in a manner which will not cause the bit to depart from a vertical digging axis.

Another object is to provide a method and apparatus for operating a hole opener bit in a pilot hole in which the rotational axis of the bit is maintained coincident with the axis of the pilot hole.

Another object is to provide a method for drilling a large diameter hole suitable for use as a mine shaft in which the hole is drilled with successively larger bits and after the initial pilot hole has been drilled straight down into the ground, rotary bits are utilized and the wall of the hole made by the preceding bit is utilized to maintain the rotational axis of the rotary bit coincident with the axis of the hole made by the preceding bit.

Another object is to provide a method of enlarging a pilot hole using a rotary bit in which the drill string is under tension during drilling with the rotary bit to prevent the weight of the drill string from tending to tip the bit from its vertical axis of rotation.

Another object is to provide apparatus for removing cuttings from a large diameter hole in which at least the larger cuttings are removed through a small diameter conduit by fluid introduced into the hole inside of the drill string.

Another object is to provide an apparatus for removing cuttings from a hole opener bit from the hole by catching the cuttings below or above the cutting face of the bit and conveying them into an upwardly flowing fluid stream such as air, gas, water, mud, etc., which conveys the entrained cuttings to the surface.

Other objects, features and advantages of this invention will be apparent from a consideration of the drawings, the written specification and the appended claims.

In the drawings wherein there is shown by way of illustration a mine shaft drilled into the ground utilizing this invention and wherein there is shown one form of apparatus for drilling said shaft, and wherein like reference numerals indicate like parts:

Fig. 1 is a view partially in vertical cross section and partially in elevation of a portion of a mine served by a shaft drilled in accordance with this invention and of the surface handling equipment for the mine;

Fig. 2 is a view in vertical section through a pilot hole showing in vertical elevation a form of apparatus used in sinking the pilot hole which is the first stage of sinking the shaft shown in Fig. 1;

Fig. 3 is a view in vertical section through the pilot hole showing in elevation a hole opener bit and stabilizer used to ream out the pilot hole to a larger diameter;

Fig. 4 is a view in vertical section through the hole cut by the hole opener bit shown in Fig. 3, and showing in elevation a still larger hole opener bit utilized in reaming out the hole to a still larger diameter and having parts broken away to illustrate the manner in which cuttings are conveyed to the surface;

Fig. 5 is a view in elevation of a plug usable with the Fig. 4 and Fig. 6 apparatus; and

Fig. 6 is a view partially in vertical cross section and partially in vertical elevation of a basket positioned above the hole opener bit.

Referring now to Fig. 1, there is shown schematically a typical mine employing a vertical shaft indicated generally at **10** to work the horizontal shaft **11** extending therefrom. Ore taken from the horizontal shaft is loaded into an elevator **12** by means of a hopper arrangement indicated generally at **13** and raised to the surface through the cable-handling apparatus indicated generally at **14** and by a suitable draw works not shown. With the elevator in its uppermost position the ore is transferred to a waiting car **15** through a suitable hopper arrangement indicated generally at **16**. The elevator is provided with a cage **17** to transport men to and from the shaft. It will be apparent that for the elevator to be operable the shaft **10** must be vertical to prevent the elevator from dragging on the walls. The walls must be smooth and straight to prevent possible cave-ins and breakoffs of rough edges of the wall which would fall into the bottom of the shaft and possibly injure men working in the mine.

The method of rotary drilling shaft **10** comprises, first, drilling a straight small pilot or rat hole to the desired depth and then reaming out this pilot hole to the desired size while maintaining the rotational axis of the bit concentric with the bore of the pilot hole to provide the smooth wall straight shaft **10**.

In drilling the pilot hole a small diameter bit of conventional type used in drilling oil and gas wells and a conventional rig and rotary means for rotating the drill stem are employed. A drill collar is interposed in the string immediately above the bit and provided with spaced rollers or reamers arranged circumferentially about the collars and spaced in groups along the collar to provide a stabilizer to hold the bit on a straight course. The hole is drilled with just enough weight on the bit to provide the force necessary for the bit to cut into the bottom of the hole. At frequent intervals an inclinometer is employed to check the drill hole inclination. By using the stabilizer and permitting only a small downward weight to be exerted on the bit, the hole should remain vertical. If the inclinometer indicates, however, that the bit has turned and that there is a dog leg in the hole, then the bit must be withdrawn and the rig shifted to a new location and the drilling operation recommenced as the pilot hole must be vertical. Drilling a vertical pilot hole is not too difficult when the stabilizer is employed above the drill and the driller carefully maintains the proper weight on the bit.

After the pilot hole has been completed, a hole opener bit is employed to ream out the pilot hole to a larger diameter. A weight is depended from the hole opener bit and extends into the pilot hole below the bit to force the hole opener bit into the formation. Preferably, the weight is provided by a stabilizer engageable with the wall of the pilot hole to maintain the bit on the proper axis of rotation. The stabilizer used in drilling the pilot hole is of a proper size and is preferably used for this service, the stabilizer and the bit utilized in drilling the pilot hole being depended from the hole opener bit so that they precede the hole opener bit into the pilot hole. Due to the large weight of drill collars, the stabilizer will provide the weight for driving the hole opener bit downward to penetrate the formation. If additional weight is desired then the stabilizer is lengthened with additional drill collars to provide such weight. The pilot hole bit is left on the bottom of the stabilizer to make certain that the hole below the hole opener bit is clear. Ordinarily the pilot hole bit will not function during the operation of the hole opener bit. It is made up in the string just in case it may be needed to open up the pilot hole or to mulch cuttings in the bottom of the hole so that they may be removed.

In the operation of the hole opener bit a tension is taken on the drill string from which the hole opener bit depends so that the weight of the drill string will not rest upon the hole opener bit, thus the drill string being in tension will not tend to corkscrew or to bow as is the case when the weight of the string is allowed to rest in part upon the bit. It is pointed out that if the weight of the drill string were permitted to rest on the hole opener bit and tended to cock its rotational axis relative to the pilot hole central axis there would be a tendency to snap off the stabilizer and, hence, the driller should pay close attention to his weight indicator and maintain the string under a tension which will prevent the weight of the string resting upon the hole opener bit. As the pilot hole is vertical, there is no need to check the hole opener bit as the stabilizer will hold it on course and rotary drilling to ream out the pilot hole may be continued using conventional drilling methods until the hole is reamed to its bottom.

Due to the increased area of contact between the cutting face of the bit and the bottom of the hole as the diameter of the hole increases, it will be appreciated that it will be desirable to use successively, hole opener bits of successively larger diameters to open the hole to the desired diameter. In each instance of use of the hole opener bit, however, there is depended from the bit a stabilizer engageable with the wall of the hole previously cut. For instance, after the first hole opener bit has been run into the hole and withdrawn, then a larger hole opener bit would be used in conjunction with a stabilizer having means engageable with the wall of the hole. Preferably, the means for engaging the wall are rollers or reamers mounted with their outermost points in a circle equal to the diameter of the hole just cut, but it will be appreciated that they might be mounted in a slightly smaller circle and still function to maintain the hole opener bit rotational axis substantially coaxial with the axis of the hole being reamed. This process is continued until the hole is reamed to the desired diameter after which the surface equipment is removed and the surface equipment illustrated in Fig. 1 erected over the hole. Between runs a long cylinder of but slightly less diameter than the hole may be run to insure that the hole is straight before beginning the next stage of drilling. The horizontal shaft is then dug in the usual manner.

Due to the fact that the hole opener bit was held on a vertical axis of rotation the wall of the shaft will be smooth and straight and no problem of cave-in or breakoff of protruding material will be present in hard formations such as rock. However, it may be necessary to case cavities or soft formations such as water sands.

Referring now to Figs. 2, 3 and 4 and to the tools used in drilling shaft **10**, reference is first made to Fig. 2 which illustrates the apparatus for sinking pilot hole **18**. A conventional rotary table indicated generally at **19** forms a part of a drilling rig not shown and rotates a drill string **20**.

Depending from the lower end of drill string **20** is a stabilizer indicated generally at **21** which engages the wall of hole **18** to maintain the stabilizer centered in hole **18**. The stabilizer **21** is made up of a plurality of drill collars **22** which are threaded into a tool joint **23** on the bottom of drill string **20**. Drill collars are chosen for the body of the stabilizer due to their great strength and weight as it is desired to localize the weight on the

pilot hole bit as close to the bit as possible and to have this weight controlled by the stabilizer. Thus, if a 500-lb. downward force is needed to operate the pilot hole bit indicated generally at **24** and the stabilizer **21** provides such 500-lb. force, then the drill string **20** may be in tension and the downward thrust of the 500-lb. force held exactly vertical by the stabilizer.

The stabilizer **21** is provided with groups of vertically spaced hole-engaging means such as rollers or reamers **25** grouped circumferentially about the stabilizer at its upper end, rollers or reamers **26** grouped circumferentially about the stabilizer at an intermediate point, and rollers or reamers **27** grouped circumferentially about the stabilizer adjacent its bottom end. These rollers when employed in spaced groups preferably include three or more rollers spaced equidistant about the stabilizer at each level. In the form illustrated in Fig. 2, four rollers equally spaced circumferentially about the stabilizer are employed in each vertically spaced group.

Preferably, the rollers **25**, **26** and **27** are mounted on axes extending generally axially of the stabilizer and lying within a single circle which is concentric with the rotational axis of the stabilizer and pilot hole bit **24** which is secured to the bottom end of stabilizer **21**. The radially outermost points of each of rollers **25**, **26** and **27** prescribe a circle which is of equal diameter with the diameter of a hole dug by bit **24**. These rollers will tend to smooth out any irregularities left in the wall of the pilot hole by the bit **24** while holding bit **24** on a straight path.

The apparatus of Fig. 2 is operated in the conventional manner with just sufficient weight on bit **24** to drive it into the formation until the desired depth of the pilot hole has been reached. At frequent intervals, an inclinometer is utilized in the conventional manner to check the angle of inclination of the pilot hole **18** and if the hole departs from the vertical, the string is withdrawn and moved to a new location where a new pilot hole is started as the pilot hole must be vertical.

After the pilot hole has been completed to the desired depth, the stabilizer **21** is broken out of the drill string **20** and a hole opener bit indicated generally at **28** (Fig. 3) is affixed to the drill string. A suitable stabilizer is depended or suspended from the hole opener bit to guide the hole opener bit and to provide the weight for forcing the bit into the formation. To avoid any tendency of the bit to tilt and leave the pilot hole due to the center of gravity of the weight for forcing the bit into the formation being above the cutting face **29** of the bit, substantially all of the weight on the hole opener bit **28** should be supplied from below the cutting face **29** of the bit. The stabilizer should be provided with surfaces which will engage the wall of hole **18** below the hole opener bit **28** if the bit attempts to depart from a rotational axis coincident with the central axis of pilot hole **18**. As the stabilizer **21** will admirably perform both of these functions, it is preferably employed. If it is desired to add more weight than the stabilizer **21** as used in drilling a pilot hole will provide, then additional drill collars are made up in the stabilizer to provide such additional weight. As the wall-engaging rollers **25**, **26** and **27** of the stabilizer are arranged to run in a circle which is equal to the diameter of pilot hole **18**, these rollers will engage the wall of hole **18** at vertically spaced points below the hole opener bit **28** and will maintain the rotational axis of the hole opener bit coincident with the axis of pilot hole **18**.

In operation of the hole opener bit of Fig. 3, the drill string **20** should be maintained under tension so that the weight of the string will not be exerted upon the hole opener bit **28** and tend to tilt it from a vertical axis. It may be possible that a small amount of the weight of the drill string might be exerted upon the hole opener bit **28** without tipping the bit from its vertical rotational axis due to the action of stabilizer **21**, but it is preferred

that all of the weight be supplied below the cutting face of the hole opener bit.

The hole opener bit is operated in the conventional manner with cuttings returned to the surface entrained in a fluid introduced into the hole through the drill string and returned to the surface in the annular space between the drill string and the bore of the enlarged hole **30**. Fluid such as air, gas, liquid or mud passing from the drill string into pilot hole **18** from the outlets in bit **24** will return up pilot hole **18** and prevent cuttings from falling into the pilot hole **18**. Any cuttings which fall past the stabilizer will be mulched by bit **24** when it reaches the bottom of the pilot hole and carried to the surface by air from outlets in bit **24**. In the event it is found expensive or difficult to remove cuttings from the hole in the conventional manner, then a special method of handling the cuttings to be described presently may be employed.

After the hole opener bit **28** has been withdrawn, it will probably be desired to ream out hole **30** to a still larger diameter and for this purpose a still larger hole opener bit indicated generally at **31** in Fig. 4 may be employed. Hole opener bit **31** is depended from drill string **20** in the same manner as was hole opener bit **28** and a stabilizer indicated generally at **32** is depended from hole opener bit **31** in the same manner as stabilizer **21** was depended from hole opener bit **28** in the Fig. 3 apparatus. As the rat hole was enlarged to form hole **30** by the hole opener bit **28**, the stabilizer **32** must be of a larger diameter, that is, a diameter which will engage the wall of hole **30** if bit **31** leaves an axis of rotation coincident with the central axis of hole **30**. This stabilizer will again provide the weight for forcing the bit into the formation.

As indicated above the stabilizer does not necessarily require rollers which run in a circle of equal diameter with the hole, nor are rollers necessary. Thus, the stabilizer **32** is cylindrical and has a diameter which is slightly less than the diameter of hole **30** so that the outer peripheral surface **33** of stabilizer **32** will not bind in the hole, yet will engage the wall of hole **30** when necessary to maintain the rotational axis of bit **31** coaxial with the central axis of hole **30**. Preferably, the stabilizer **32** is of a length which will cause it to engage the hole upon slight departure of bit **31** from the proper rotational axis. While the stabilizer is indicated to be rigidly secured to the bit, it may be secured to the bit in any other desired manner as will be understood by those skilled in the art.

In operating the hole opener bit **31**, the entire weight for driving the cutting face of the bit into the formation is preferably provided by the stabilizer **32**. The bit is operated in the same manner as was hole opener bit **28** to ream out hole **30** to form shaft **10**. As the wall of shaft **10** is vertical and smooth, it will not be necessary to timber or case the wall to prevent cave-ins and breaking off of rough edges unless it is desired to do so in soft formations.

Referring now to the means for returning cuttings to the surface shown in Fig. 4, it will be noted that the cuttings are returned to the surface within drill string **20** instead of within the annular space between the drill string and the wall of hole **10**. Entraining cuttings within a vertical stream of air or gas requires terrific air velocity and it is easier to provide this velocity within a small diameter pipe, such as drill string **20**, than in the large diameter hole **10**.

In order to catch the cuttings as they fall into hole **30**, there is provided an annular basket **36** arranged concentric with and carried by stabilizer **32** immediately below bit **31**. The upper end of stabilizer **32** has a reduced diameter portion **35** to provide an annular space between the stabilizer and basket wall into which cuttings may fall. The basket **36** has an outer diameter but slightly smaller than the diameter of hole **30** to prevent cut-

tings from falling into the space between the basket and hole 30. The lower end of the basket has a constantly reducing diameter portion 37 which necks about stabilizer 32 in the form of a funnel so that cuttings from drill 31 will be directed to lateral passageways 38 and 39 which conduct cuttings from basket 36 to a jet mixer 40 within the stabilizer bore 50. Mixer 40 is a generally tubular member extending coaxially with stabilizer bore 50 and has a jet inlet 41 in its lower end. Its upper end terminates in an outwardly beveled seat for receiving an inner string of tubing 42 in the drill string to convey cuttings from the mixer to the surface. Lateral passages 38 and 39 conduct cuttings into the mixer immediately above the jet where they are mixed in the fluid such as air or gas passing through the jet and conveyed to the surface. Tubing 42 extends upwardly from the basket through the stabilizer and bit and within drill string 20 to the surface. Where this arrangement us used, a plug 43 may be positioned within the stabilizer 32 immediately below the bottom end of the inner string of tubing 42 so that air introduced into the drill string will travel downwardly in the annular space between the inner string of tubing 42 and drill string 20 through a bore 44 in bit 31, and into bore 50 in stabilizer 32, through holes 49*a* into chamber 40*b* and thence upwardly through jet 41 to entrain cuttings and then up the inner string of tubing 42. If desired, an annular sleeve shown at 45 may be carried by inner string 42 in a position to overlie passageways 46 leading to the fluid outlets in the bit 31 so that substantially all of the fluid in the drill string will be directed to jet 41. When the sleeve is used, it will be appreciated that after the basket 36 has been cleaned out the inner string 42 will be pulled and a plug 47, shown in Fig. 5, seated in mixer 40 with a wire line. The bit will then be operated until basket 36 is filled with cuttings at which time plug 47 will be pulled, inner string 42 reinserted, and the basket 36 again cleaned out. During drilling operations fluid may be continuously circulated in the conventional manner in the hole and some of the lighter cuttings will be brought to the surface by such fluid and only the heavier cuttings will fall into basket 36.

In some instances it may be desirable to employ a basket above the hole opener bit. For instance, if the basket method is to be used when the first hole opener bit 28 is run, the pilot hole 18 is rather small and the basket would desirably be placed above the bit as shown in Fig. 6. While of a different size, basket 48 is identical in construction with basket 36. Mixer 49 is identical in construction and function with mixer 40. During drilling operations cuttings are picked up by fluid delivered to the bit in the conventional manner and carried up the hole. While light cuttings will be carried to the surface, some of the heavy cuttings will be carried up a short distance and then tend to fall back if a light fluid such as air or gas is used to wash the hole. By positioning basket 48 above the bit and providing sufficient fluid velocity, heavy cuttings will be lifted above the basket and fall back into the basket. Fluid will be forced through holes 49*a* of mixer 49 and on down into the bit 24. However, due to the pump pressure on the downflowing fluid and the lack of such pressure in tubing 42, part of the fluid flowing down through holes 49*a* into the space 49*b* will flow up through the jet 49*c* into tubing 42. These heavy cuttings from the basket 48 will then be fed into mixer 49 and be conducted to the surface. If desired, the plug 47 may be seated in mixer 49 during drilling and then removed and the basket cleaned as in the case of the basket below the hole.

From the above it will be seen that all of the objects of this application have been accomplished. There has been provided a method and an apparatus for rotary drilling a large diameter hole usable as a mine shaft. The hole is vertical so that an elevator may move freely within the shaft and the wall of the hole is smooth so that danger of cave-ins and breaking off of rough edges is greatly minimized. There has been provided both a method and a suitable apparatus for drilling a smooth wall straight hole as well as a means for returning cuttings to the surface in the event circulation in the normal manner is not satisfactory in removing the cuttings.

It will be understood that while this invention has been illustrated and described in sinking a mine shaft, it is usable in sinking a vertical hole into the ground for any purpose and may find particular application in drilling large diameter holes for the production of oil and gas where the drilling contract requires that the hole be held within narrow limits from the vertical or where a straight hole would be advantageous for workover operations or the like. This is contemplated by and is included within the scope of many of the claims.

From the foregoing it will be seen that this invention is one well adapted to attain all of the ends and objects hereinabove set forth, together with other advantages which are obvious and which are inherent to the method and apparatus.

It will be understood that certain features and subcombinations are of utility and may be employed without reference to other features and subcombinations. This is contemplated by and is within the scope of the claims.

As many possible embodiments may be made of the invention without departing from the scope thereof, it is to be understood that all matter herein set forth or shown in the accompanying drawings is to be interpreted as illustrative and not in a limiting sense.

The invention having been described, what is claimed is:

1. The method of rotary drilling a hole having a straight, smooth wall and closed bottom comprising the steps of drilling a relatively small diameter pilot hole straight down into the earth from the surface to the desired depth, rotary reaming the pilot hole to a larger diameter with a rotary hole opener bit rotated by a drill string under tension, suspending below and from the bit in the pilot hole during said reaming a weight sufficient in mass to provide the entire necessary downward cutting force on the bit, and exerting on the upper end of said drill string during drilling a lifting force in excess of the total weight of the drill string above the hole opener bit, but less than the aggregate weight of the drill string, the bit and the weight suspended below the bit, whereby the entire drill string will be maintained under tension during drilling, and the entire drilling force will be exerted on the bit from below the bit.

2. The method of claim 1 including in the reaming step repeated reamings with successively larger hole opening bits, suspending below and from each hole opening bit in the hole below the bit a weight sufficient in mass to provide substantially the entire necessary downward cutting force on that bit, and exerting on the upper end of said drill string during drilling with each bit a lifting force in excess of the total weight of the drill string above that bit, but less than the aggregate weight of the drill string, the bit and the weight suspended below the bit.

3. In combination, a drilling apparatus comprising a hole opener bit carried by a drill string having a central bore therethrough, a stabilizer depending from the bit and engageable with the wall of a pilot hole to maintain the rotational axis of the bit coincident with the central axis of the pilot hole, a basket carried by the drill string and positioned to catch cuttings from the bit, a jet for introducing a pressure fluid upwardly into the drill string, and means for admitting cuttings from the basket into the drill string at a point adjacent the jet outlet, whereby the pressure fluid will convey the cuttings up the drill string.

4. A drilling apparatus in accordance with claim 3 in which there is an inner string of pipe within the drill string and forming an annular passage therewith, the jet is disposed to introduce pressure fluid upwardly

into the inner string of pipe, the means for admitting cuttings from the basket into the drill string admits them into the inner string adjacent the jet outlet, and the jet intake is connected to the annular passage within the drill string ouside the inner pipe to receive pressure fluid therefrom.

References Cited in the file of this patent

UNITED STATES PATENTS

1,525,235	Hansen	Feb. 3, 1925
1,547,461	Steele	July 28, 1925
1,844,371	Santiago	Feb. 9, 1932
2,141,111	Mitchell	Dec. 20, 1938
2,203,998	O'Grady	June 11, 1940
2,208,530	Thompson	July 16, 1940
2,281,614	Ogran	May 5, 1942
2,301,617	Cox et al.	Nov. 10, 1942
2,585,369	Caruthers	Feb. 12, 1952
2,634,101	Sloan	Apr. 7, 1953
2,657,907	Cochran et al.	Nov. 3, 1953
2,688,871	Lubinski	Sept. 14, 1954
2,703,698	Westerman	Mar. 8, 1955
2,746,719	Seligman	May 22, 1956
2,766,013	Hertzke	Oct. 9, 1956

FOREIGN PATENTS

505,302	Belgium	Sept. 15, 1951

OTHER REFERENCES

"New Eastco," World Oil Magazine, February 15, 1955, page 119.