No. 842,969. PATENTED FEB. 5, 1907.

H. C. OSTERMANN.

GRAIN DOOR VALVE.

APPLICATION FILED APR. 28, 1906.

Fig. 1.

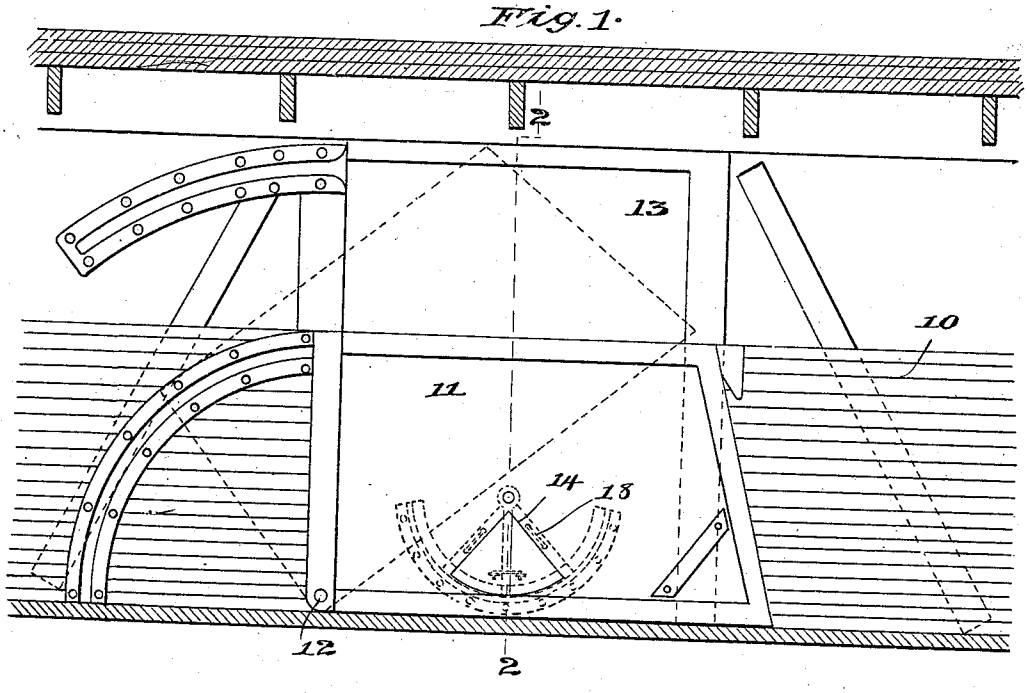

Fig. 3.

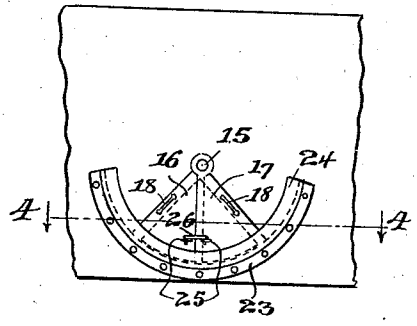

Fig. 2.

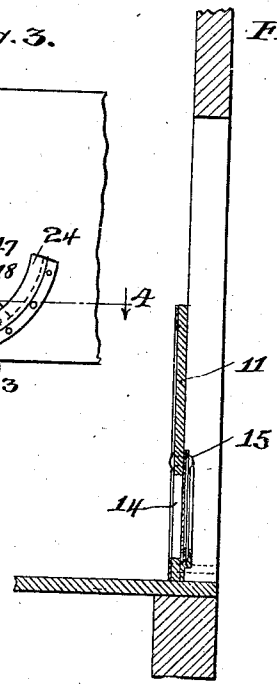

Fig. 4.

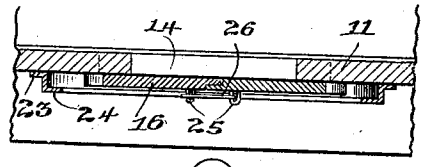

Fig. 5.

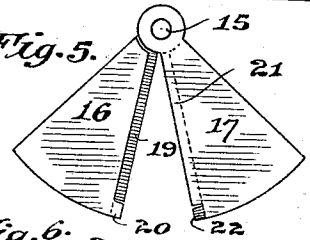

Fig. 6.

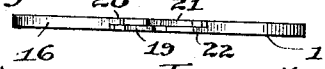

Witnesses,

V. D. Mann,

Walter M. Fuller

Inventor,

Henry C. Ostermann

By Offield Towle & Linthicum

Attys.

THE NORRIS PETERS CO., WASHINGTON, D. C

UNITED STATES PATENT OFFICE.

HENRY C. OSTERMANN, OF CHICAGO, ILLINOIS, ASSIGNOR TO THE OSTERMANN MANUFACTURING CO., OF CHICAGO, ILLINOIS, A CORPORATION OF SOUTH DAKOTA.

GRAIN-DOOR VALVE.

No. 842,969. Specification of Letters Patent. Patented Feb. 5, 1907.

Application filed April 28, 1906. Serial No. 314,189.

To all whom it may concern:

Be it known that I, HENRY C. OSTERMANN, a citizen of the United States, residing at Chicago, in the county of Cook and State of Illinois, have invented certain new and useful Improvements in Grain-Door Valves, of which the following is a specification.

My invention relates to the valves used in grain-doors for railway-cars, and its salient features are the ease with which the grain may be discharged through a port-opening in the door, the simplicity of the valve, the means for preventing a leakage of grain through the valve when in closed position, and its economy of manufacture.

In the accompanying drawings I have illustrated the preferred embodiment of my invention, wherein—

Figure 1 is a longitudinal section of a freight-car adapted to carry grain, the same being equipped with a grain-door having my improved form of valve. Fig. 2 is a cross-section of the side of the car and grain-door on the line 2 2 of Fig. 1. Fig. 3 is an outer face view of a portion of the grain-door. Fig. 4 is an enlarged horizontal section of the grain-door on the line 4 4 of Fig. 3 as viewed in the direction indicated by the arrows. Fig. 5 is a face view of the two plates constituting the valve, and Fig. 6 is a lower edge view of the two plates shown in Fig. 5.

Referring to Fig. 1, the car 10 is equipped with a grain-door 11, pivoted at the point 12 and adapted to be swung on its pivot in a plane parallel to the side of the car away from the doorway 13. This grain-door has a sector-opening 14 near its lower edge, and in order to open and close this port-opening I provide at the point 15 two sector-plates 16 and 17, each of which is equipped with an operating-handle 18, as illustrated in Figs. 1 and 2. The edge of plate 16 adjacent to the plate 17 has a comparatively long inner flange 19 on its inner surface and a much shorter flange 20 on its outer surface, while the edge of plate 17 has a flange 21 on its outer surface and a flange 22 on its inner surface. When the plates 16 and 17 are pushed or allowed to come together, as illustrated in Figs. 1 and 2, flange 21 overlaps 19 and the flange 20 overlies flange 22. This construction forms a sort of seal, which prevents any leakage of grain between the two plates. In order to prevent the grain from pressing the valve-plates outwardly from the grain-door, I mount on its outer surface an arc-shaped plate 23, provided with a flange 24, which is adapted to overlap the lower curved edges of the sector-plates 16 and 17. By this construction the valve-plates are effectually prevented from being displaced. Each plate 16 and 17 has a ring or staple 25, with which another staple or hook 26 coacts to lock the two plates in closed position and to prevent their being jarred apart while the car is in transit.

The operation of the device is as follows: When it is desired to permit the grain to pour through the port-opening 14 and be discharged from the car, the hook or staple 26 is raised, thereby unlocking the valve-plates 16 and 17 one from the other, and then by means of the handles 18 one or both of the plates may be turned on its pivot 15, so as to open the port in the door a greater or less amount, as desired. To close the port, it is merely necessary to permit the two plates to again come together, at which time they may be fastened or locked together. It will be apparent that it is much easier to move one of the plates 17 with the grain pressing thereagainst than it would be to shift a single plate covering the entire port-opening. The pressure of grain against a valve of this character is considerable, and it is to facilitate the opening of such a valve that I have divided the plate constituting the port-opening into two parts.

Minor mechanical changes may be made in the construction shown and described herein without departing from the substance of my invention as set forth in the appended claims.

Cross-reference is made herein to the following copending applications, which claim some of the features shown in but not claimed in this application, No. 260,560, filed May 15, 1905; 271,448, filed July 27, 1905, and 275,784, filed August 25, 1905.

I claim—

1. In a device of the character described, the combination of a grain-door having a port-opening, a pair of pivotally-mounted plates adapted to close said opening, the meeting edges of said plates each having a portion adapted to lie in front of a part of the other plate, substantially as described.

2. In a device of the character described, the combination of a grain-door having a

port-opening, a pair of sector-plates concentrically pivoted on said door and adapted to close said opening, the meeting edge of each plate having a portion adapted to lie in front of a part of the other plate, substantially as described.

3. In a device of the character described, the combination of a grain-door having a port-opening, a pair of sector-plates concentrically pivoted on said door and adapted to close said opening, the meeting edge of each plate having a front and a back flange, the front flange of each plate being adapted to overlie the back flange of the other plate when both of said plates are in closed position, substantially as described.

4. In a device of the character described, the combination of a grain-door having a port-opening, a pair of sector-plates concentrically pivoted on said door and adapted to close said opening, the meeting edge of each plate having a front and a back flange, the front flange of each plate being adapted to overlie the back flange of the other plate when both of said doors are in closed position, and an arc-shaped retaining member overlying edges of said plates to maintain them in position against the pressure of the grain behind the door, substantially as described.

HENRY C. OSTERMANN.

Witnesses:
WALTER M. FULLER,
L. F. MCCREA.