R. S. OGILVY.

FOUNTAIN PEN.

APPLICATION FILED APR. 11, 1919.

1,317,817. Patented Oct. 7, 1919.

Fig. 1.

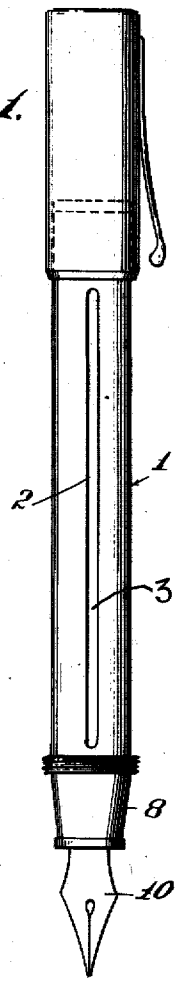

Fig. 2.

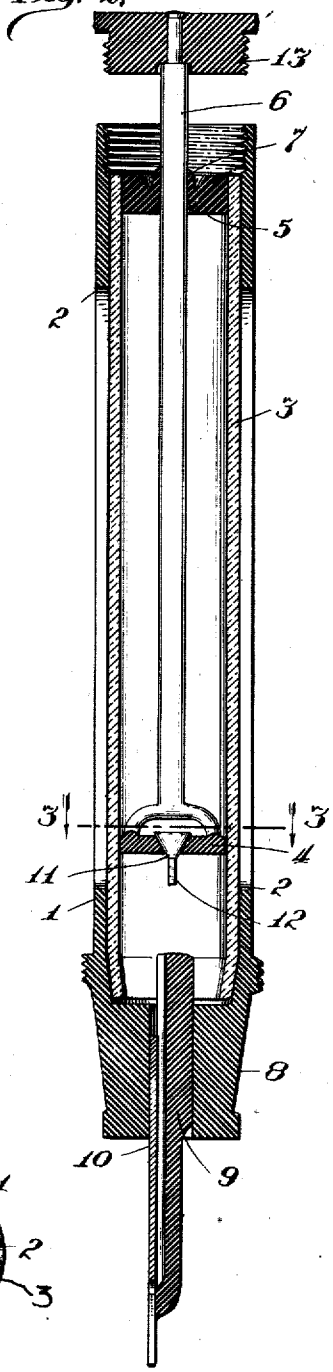

Fig. 4.

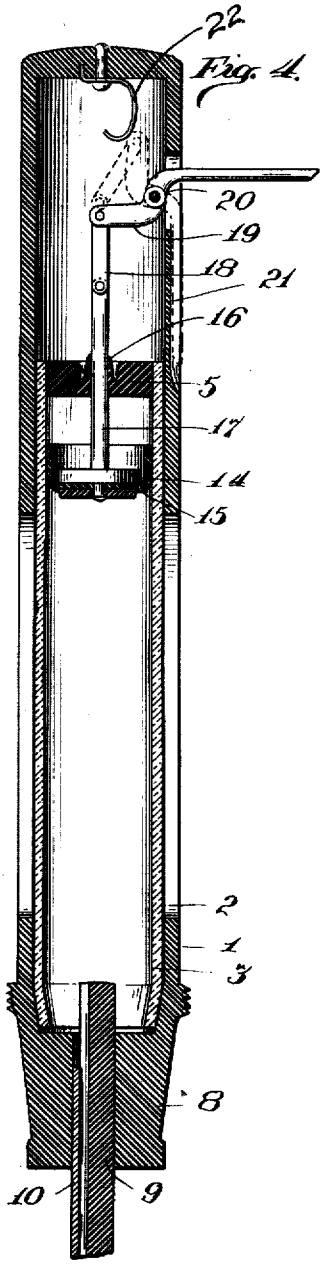

Fig. 3.

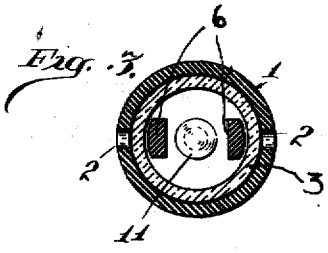

Inventor

Robert S. Ogilvy.

By Rudolph Kuhn & Co

Attorneys.

UNITED STATES PATENT OFFICE.

ROBERT S. OGILVY, OF CHICAGO, ILLINOIS.

FOUNTAIN-PEN.

1,317,817. Specification of Letters Patent. Patented Oct. 7, 1919.

Application filed April 11, 1919. Serial No. 289,354.

To all whom it may concern:

Be it known that I, ROBERT S. OGILVY, a citizen of the United States, residing at Chicago, in the county of Cook and State of Illinois, have invented certain new and useful Improvements in Fountain-Pens; and I do hereby declare the following to be a full, clear, and exact description of the invention, such as will enable others skilled in the art to which it appertains to make and use the same.

This invention relates to improvements in fountain pens, and more particularly to that type of fountain pen which is known as "the self-filling".

The invention has for its particular object, first: to provide a fountain pen wherein the ink chamber is visible from the exterior of the pen to the end that the user may know the extent of the supply at all times in order that refilling thereof may be accomplished when necessary.

A further object of the invention is to provide novel and efficient means for effecting refilling of the pen by suction from an inkwell or similar source of supply with ease and rapidity.

A further object of the invention is to provide simple and efficient manually operable means for effecting refilling of the pen when desired.

The invention consists in the features of construction and combinations of parts hereinafter fully described and particularly claimed.

In the accompanying drawings illustrating a suitable embodiment of the invention:

Figure —1— is a view in side elevation of a fountain pen constructed in accordance with the invention.

Fig. —2— is a central vertical longitudinal section of the same.

Fig. —3— is a cross section on the line 3—3 of Fig. 2.

Fig. —4— is a view similar to Fig. —2— showing a modified form of construction.

Referring now to said drawings, 1 indicates the barrel of the pen which preferably consists of an outer casing of hard rubber or similar material or composition having preferably one or more longitudinal slots 2 therein. Where more than one of said slots is provided they are preferably diametrically opposed. They may be continuous or discontinuous as desired.

Within the outer casing there is mounted a cylindrical shell 3 of a transparent material such as glass, celluloid or any other suitable material. This may be mounted within the outer shell or casing in any suitable manner to prevent the penetration or permeation of ink into the space between the same. The transparent shell 3 will provide a smooth cylindrical bore in which the piston 4 is reciprocable. Preferably the inner shell is of less length than the outer shell so as to provide a free space in the upper end of said outer shell. The said upper end of the inner shell 3 is closed by means of a plug 5 preferably of soft rubber having a central opening through which the piston rod 6 extends. The central opening of the plug 5 is bordered at its outer end by a flexible annular flange 7 which normally tightly hugs the piston rod 6. The opening is preferably slightly flared at the inner face of the plug 5.

The lower end of the outer shell terminates in what may be termed the pen section 8 which may be integral with the outer shell or suitably secured thereto. The section 8 has a central opening through which the feed element 9 of ordinary construction projects, and into which the nib 10 is fitted in the usual manner. The feed element 9 projects partially into the inner casing 3.

The piston 4 is preferably made of soft rubber or similar flexible material, and is provided with a central opening bordered by a valve seat on which the check valve 11 seats. The latter is free to move from its seat a limited distance so as to permit fluid to pass the piston 4 and enter the space above the same. When the piston 4 is at the lower limit of its movement the stem 12 of the valve 11 will rest upon the upper end of the section 9 thus maintaining said valve open or off its seat. At this time the plug 13 at the upper end of the piston rod 6 will project into the open space above the plug 5. The outer shell is interiorly threaded to receive the external threads of the plug 13 whereby the ink chamber of the pen, as well as the upper end of the barrel, will be hermetically sealed.

In operation the flange 7 of the plug 5 acts as a check valve so that during movement of the plunger or piston 4 toward the plug 5 fluid trapped above the piston 4 will expand the flange 7 and will thus escape from the barrel. Upon a reverse or downward movement of the piston 4 the flange 7 will so tightly hug the piston rod 6 as to pre-

vent air passing into the barrel thus creating a vacuum above the piston 4 which will permit fluid to pass into the chamber above the latter. During the first-named or upward stroke of the piston 4 the valve 11 will be seated thereby obviously creating a partial vacuum in the space or chamber below said piston, and thus causing ink to be drawn up into the barrel. During the downward movement of the piston the ink drawn up into the lower chamber above the section 8 will be held therein and will pass through the opening in the piston 4, as the latter moves into the body of ink, into the upper or ink chamber of the pen. As the downward move of the piston 4 is completed and the plug 13 screwed into place the valve 11 will be held off its seat thus permitting the ink trapped above the piston to pass freely through the section 9 to the pen point to feed the latter.

In the construction shown in Fig. —4— the operation is slightly different in that the piston 14 carries a flexible cup washer 15 which normally hugs the surrounding wall of the inner casing. Thus, during an upward movement of said piston fluid trapped above the same will be forced past the flange 16 corresponding to the flange 7 of Fig. —2— but upon a downward movement of the piston air will be prevented from entering the barrel through the plug 5. During such downward movement air or fluid may pass the flange of the cup washer 15 which acts exactly like a check valve, as will be obvious. The piston rod 17 is connected by means of a link 18 with the inner end of a rocking lever 19 which is pivotally mounted between its ends in a slot 20 in the outer shell above the upper end of the inner shell of the barrel. Communicating with the slot 20 is a longitudinal groove 21 in which the outer projecting end of the lever 19 is adapted to be housed when the same is not in use for reciprocating the piston.

In this construction it is not intended that the ink shall pass the piston 14 into the chamber above the latter. Accordingly the piston 14 is reciprocated as often as necessary to draw ink into the barrel through the pen section to any desired level which the operator ascertains through the slot or slots 2. When the outer projecting end of the lever 19 is housed in the slot 21 the upper end of the cup washer will press lightly upon the inner face of the plug 5 thus preventing ink from passing the piston and thus finding its way into the upper chamber of the barrel. When the lever 19 is in the position shown in dotted lines in Fig. 4, the inner end thereof will have passed the free end of the bowed spring 22 secured in the upper end of the barrel or casing 1 and the said spring will then serve to hold the lever in that position so that the outer end portion thereof will lie in the groove 21 of the casing 1.

While I have shown the preferred embodiments of the invention in the accompanying drawings, it will be obvious that the same may be changed and varied in details as mechanical skill may direct without departing from the invention as defined in the appended claims.

I claim as my invention:

1. In a fountain pen, the combination with the barrel having an inlet opening for ink at one end and closed adjacent its other end portion, of a reciprocable piston within said barrel, a flexible element carried thereby adapted to expand into close contact with the surrounding wall of the barrel during movement of the piston toward the closed end of the barrel, a piston rod projecting through an opening in the said end wall of the barrel, and a flexible flange bordering said opening and adapted to hug said piston rod to provide a fluid tight joint as the piston is moved by said rod away from the closed end of said barrel, substantially as and for the purpose set forth.

2. In a fountain pen, the combination with the barrel having an inlet opening for ink at one end and closed adjacent its other end portion, of a reciprocable piston within said barrel, a flexible element carried thereby adapted to expand into close contact with the surrounding wall of the barrel during movement of the piston toward the closed end of the barrel, a piston rod projecting through an opening in the said end wall of the barrel, and a flexible flange bordering said opening and adapted to hug said piston rod to provide a fluid tight joint as the piston is moved by said rod away from the closed end of said barrel, substantially as and for the purpose set forth and a rocking lever pivotally mounted between its ends in the wall of the barrel contiguous to the closed end thereof and exteriorly of the ink chamber thereof and operatively connected with the piston for reciprocating the same.

3. In a fountain pen, the combination with the barrel having an inlet opening for ink at one end and closed adjacent its other end portion, of a reciprocable piston within said barrel, a flexible element carried thereby adapted to expand into close contact with the surrounding wall of the barrel during movement of the piston toward the closed end of the barrel, a piston rod projecting through an opening in the said end wall of the barrel, and a flexible flange bordering said opening and adapted to hug said piston rod to provide a fluid tight joint as the piston is moved by said rod away from the closed end of said barrel, substantially as and for the purpose set forth, there being a slot in said barrel contiguous to the closed

end thereof and exteriorly of the ink chamber thereof, and an external longitudinal groove terminating at one end in said slot, and a rocking lever pivotally mounted between its ends in said slot operatively connected with the piston for reciprocating the same, the outer end portion of said lever being adapted to lie in said groove when not in use.

4. In a fountain pen, the combination with the barrel having a partially transparent wall for rendering visible the level of ink contained therein and an inlet opening for ink at one end and closed adjacent its other end portion, of a reciprocable piston within said barrel, means carried by said piston for permitting fluid to pass the same from the inlet to the closed end portion of the barrel during movement of said piston in one direction and preventing fluid from passing the same during reverse movement thereof, means in the closed end portion of said barrel for preventing entry of fluid into the same during movement of the piston in the last-named direction and for permitting ejection of fluid from the barrel during movement of the piston in the opposite direction, a piston rod, a digitally operable lever pivotally mounted between its ends in the barrel and operatively connected with the piston rod for reciprocating the piston for drawing ink into the barrel to fill the latter to any desired level.

5. In a fountain pen, the combination with the barrel having an inlet opening for ink at one end and closed adjacent its other end portion, of a reciprocable piston within said barrel, a check-valve carried by said piston and adapted to automatically permit passage of fluid past the piston upon movement of the latter in one direction, a piston rod projecting through an opening in the said end wall of the barrel, and a flexible flange bordering said opening and adapted to hug said piston rod to provide a fluid tight joint as the piston is moved by said rod away from the closed end of said barrel, substantially as and for the puspose set forth.

6. In a fountain pen, the combination with the barrel having an inlet opening for ink at one end and closed adjacent its other end portion, of a reciprocable piston within said barrel, a flexible element carried thereby adapted to expand into close contact with the surrounding wall of the barrel during movement of the piston toward the closed end of the barrel, a piston rod projecting through an opening in the said end wall of the barrel, and a flexible flange bordering said opening and adapted to hug said piston rod to provide a fluid tight joint as the piston is moved by said rod away from the closed end of said barrel, substantially as and for the purpose set forth, there being a slot in said barrel contiguous to the closed end thereof and exteriorly of the ink chamber thereof, and an external longitudinal groove terminating at one end in said slot, and a rocking lever pivotally mounted between its ends in said slot operatively connected with the piston for reciprocating the same, the outer end portion of said lever being adapted to lie in said groove when not in use, and means associated with the barrel and said lever for holding the latter firmly at one limit of its pivotal movement.

7. A fountain pen comprising a barrel provided between its ends with openings, a transparent cylinder adapted to contain ink mounted within said barrel, a piston reciprocable within said transparent cylinder, means for reciprocating the piston, valves associated with said piston and said cylinder for permitting ink to be drawn into one end portion of the latter, said piston reciprocating means adapted to impart to and to limit the movement of the piston to a short stroke in the upper end portion of said cylinder to cause ink to be contained in the latter only below said piston.

ROBERT S. OGILVY.