April 14, 1931. R. MAYRSHOFER 1,800,259

ELECTRIC PLUG

Filed April 10, 1929

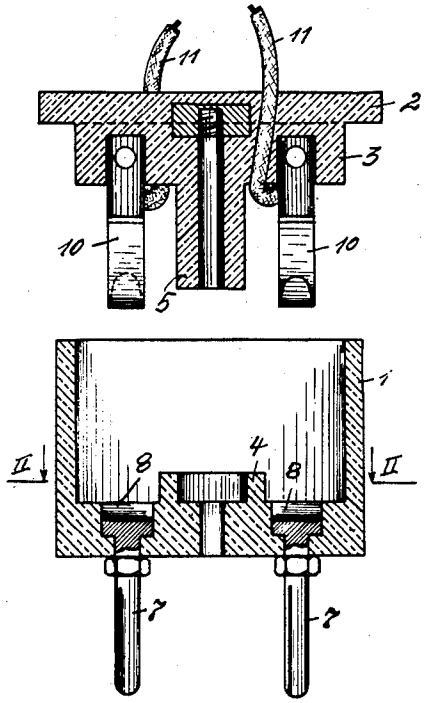

Fig. 1

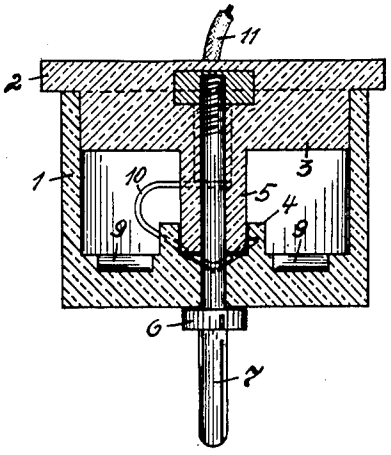

Fig. 3

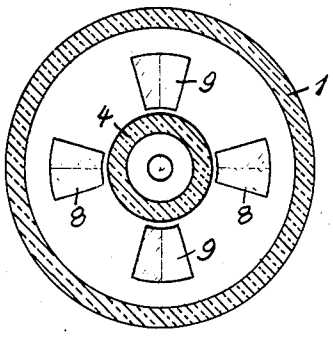

Fig. 2

INVENTOR:
Richard Mayrshofer
BY: Ruggi, Boyce & Bakeless
ATTORNEYS.

Patented Apr. 14, 1931 1,800,259

UNITED STATES PATENT OFFICE

RICHARD MAYRSHOFER, OF MUNICH, GERMANY

ELECTRIC PLUG

Application filed April 10, 1929, Serial No. 353,974, and in Germany April 21, 1928.

This invention relates to electric plugs of the kind furnished with a switching means for connecting or disconnecting the current.

In plugs of this description it has already been proposed to furnish the same with a switching means capable of being operated from the exterior. It is possible, however, to construct these known arrangements only in the form of single-pole switches, whereas in many cases a double-pole system is to be desired.

It is the primary object of the present invention to overcome the drawback in question, an additional object being to provide a plug which is entirely closed off against the exterior, thus avoiding any slots or open portions for the movement of an exteriorly operated lever or the like for actuating the switch mechanism, which slots or openings, as will be readily obvious, allow the penetration of dust, etc., into the interior of the plug.

With these objects in view and such others as will be apparent as the description proceeds, I accordingly make the plug of two parts, which are capable of relative rotation and carry the contact portions moved into and out of engagement with each other. These two parts consist of a sleeve or female portion, which is closed off at the one end, and a socket or male portion adapted to be rotated in the said sleeve. The two parts are connected in such manner that merely rotation is possible without axial displacement. The bottom or end portion of the sleeve is furnished with the plug pins, which are connected on the inner side of the bottom with metallic rests. On the inner side of the bottom, projecting into the interior of the sleeve, are also provided contact springs, which are connected with the leads. The two parts of the plug, male and female portion, are made of a suitable insulating material. In addition to the metallic rests there are also provided in the bottom of the sleeve recesses into which the contact springs move when the current is cut off.

The invention will now be described more fully with reference to the accompanying drawing, in which the invention is illustrated by way of example in one possible form of embodiment.

Fig. 1 shows the plug with the male and female portions taken apart.

Fig. 2 is a section along the line II—II in Fig. 1.

Fig. 3 shows the plug in assembled form, i. e., with the male and female portions set together, and rotated at an angle of 90° in relation to Fig. 1.

Referring now to the drawing, the plug casing consists of the sleeve or female portion 1, and the socket or male portion 3, which is furnished with an edge flange 2. At the center of the sleeve bottom there is provided an elevated portion 4, which is engaged by a tubular projection 5 on the socket 3 when the plug is assembled, the tubular projection extending into a cavity in the said elevation. As shown in Fig. 3, the parts are held together by means of a screw or the like 6 and, although the same may be relatively rotated, they are incapable of axial displacement.

In the bottom or end portion of the sleeve 1 there are secured the plug pins 7, which are electrically connected with metallic rests on the inner side of the said bottom. In the latter are also provided additional rests 9 consisting of recesses in the insulating material. Contact springs 10 bent to a suitable shape are mounted on the face side of the socket or male portion 3, these springs being connected to the leads 11.

The operation of the plug is as follows: The plug is fitted with its pins 7 into a wall socket of the usual kind. Indication of the relative position of the male portion 3 to the female portion 1, that is to say—the relative positions of the contact springs 10 and the rests 8, may be given by the provision of suitable exterior markings. It is assumed that the springs 10 rest above or in the rests 9, i. e., the recesses in the insulating material. In this position the current is unable to pass through the pins 7 into the leads. If, however, the member 3 is rotated to the extent of 90° in relation to the sleeve 1, the springs 10 are moved against the rests 8, and the current is able to flow through the pins 7 and the leads 11 to the point of consumption. By

simply rotating the socket 3 the current is again cut off.

The rests 8 and 9 may be constructed in such manner that in the one direction of rotation the springs encounter so much resistance as to cause a locking of the device, so that rotation is possible in one direction only. It is possible, however, to also make the rests in such manner as to allow rotation of the member 3 in relation to the sleeve 1 in both directions.

It will be understood that no restriction is made to the specific form of embodiment shown, and that various modifications may be made without departing from the spirit of the invention.

What I claim as new and desire to secure by Letters Patent is:

1. An electrical switch plug, comprising a tubular member having a bottom wall at one end thereof, a closing member rotatable in the opposite end of said tubular member and having a central bearing on said bottom wall, means for securing said tubular member and end-closing member together for relative rotation and against relative axial movement, fixed contact-forming members secured on said bottom wall, and flexible contact-forming members carried by said end-closing member and adapted to be rotated into and out of contact with said fixed members.

2. An electrical switch plug, comprising a tubular member having a bottom wall at one end thereof, a closing member rotatable in the opposite end of said tubular member and having a central bearing on said bottom wall, means for securing said tubular member and end-closing member together for relative rotation and against relative axial movement, fixed contact-forming members secured on said bottom wall, and flexible contact-forming members carried by said end-closing member and adapted to be rotated into and out of contact with said fixed members, said bottom wall having depressions therein adapted to receive said flexible contact members and retain them out of contact with said fixed members.

3. An electrical switch plug, comprising a tubular member having a bottom wall at one end thereof, a flanged closing member rotatable in the opposite end of said tubular member, said bottom wall and end-closing member having one a central bearing cup and the other an integral cylindrical projection seated in said cup, means passing axially through said bearing cup and projection for securing said tubular member and end-closing member together for relative rotation and against relative axial movement, fixed contact-forming members secured on said bottom wall, and flexible contact-forming members carried by said end-closing member and adapted to be rotated into and out of contact with said fixed members.

In testimony whereof I have affixed my signature.

RICHARD MAYRSHOFER.