Jan. 11, 1966 H. RITTER 3,228,361

LIGHTWEIGHT SANDWICH ARMOR PLATING

Filed June 1, 1964

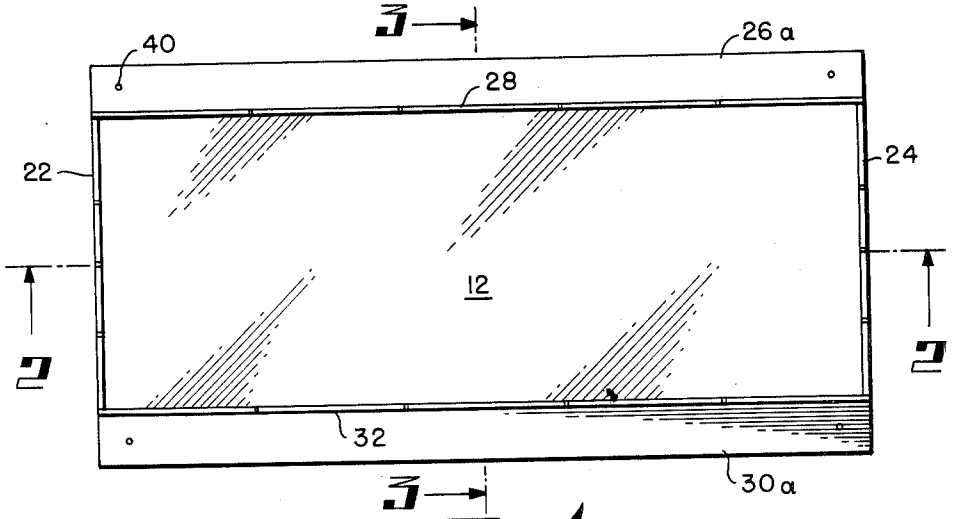

Fig 1

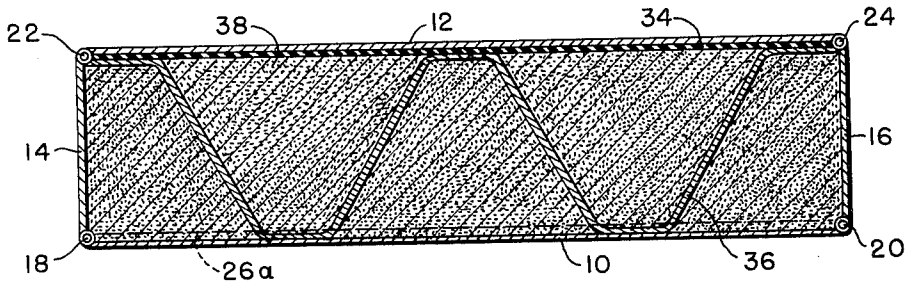

Fig 2

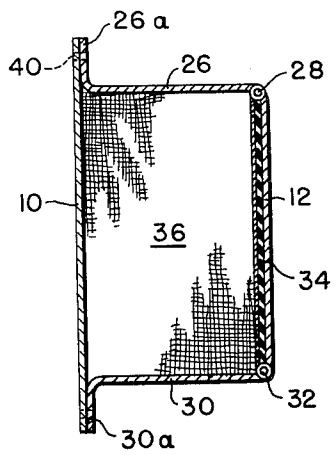

Fig 3

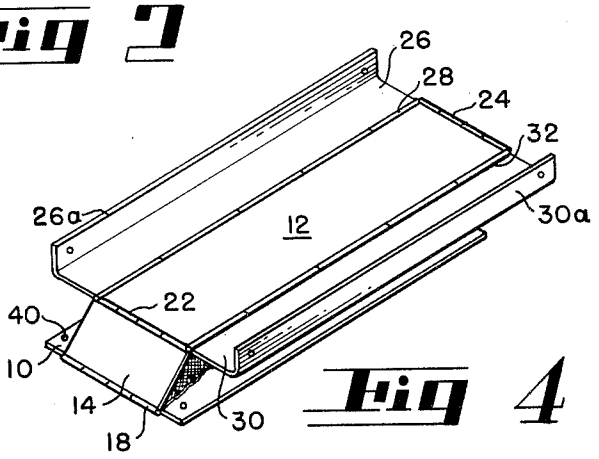

Fig 4

INVENTOR.
HENRY RITTER
BY Alden D. Redfield
Irwin P. Garfinkle
ATTORNEYS.

United States Patent Office 3,228,361 Patented Jan. 11, 1966

3,228,361

LIGHTWEIGHT SANDWICH ARMOR PLATING

Henry Ritter, Nashville, Tenn., assignor to Avco Corporation, Nashville, Tenn., a corporation of Delaware

Filed June 1, 1964, Ser. No. 371,686
8 Claims. (Cl. 109—84)

This invention relates to lightweight armor plating, and more particularly to a collapsible honeycombed or corrugated armor plate construction in which the honeycomb or corrugated cells may be filled with sand or other granular material prior to use.

The prior art has provided many armor plating arrangements for preventing the passage of a projectile. These constructions range from sandbags, which have proved relatively effective for limited applications, to sophisticated laminated constructions. By and large, the object of each of the constructions is to decrease the penetrative power of a projectile striking the armor plate by deflecting the course of the projectile. The major defect in sandbags is that even a small tear results in a loss of sand, while the major defect of the more elaborate schemes is excessive weight, primarily during transportation.

The primary object of this invention is to provide an armor plating construction having even greater effectiveness in preventing projectile penetration than the sandbag, and having the advantage over other arrangements of light weight and minimum volume when not in use or when being transported prior to use.

Another object of this invention is to provide armor plating comprised of a sandwich of sheet metal plates or reinforced plastic skins with a flexible honeycomb or corrugated core fillable with a granular material, such as sand.

Another object of this invention is to provide armor plating of a cellular construction in which the cells are filled with sand, the edge members of the sandwich construction being closable to retain the sand within the cells during use in an upright position.

Still another object of this invention is to provide armor plating consisting of two spaced sheet metal or reinforced plastic panels having a collapsible cellulor core, the cells of the core being fillable with projectile-resisting material.

For a better understanding and for further objects of this invention, reference should now be made to the following detailed specification in which:

FIGURE 1 is a plan view of the armor plating construction provided by this invention;

FIGURE 2 is a section taken through the line 2—2 of FIGURE 1;

FIGURE 3 is a section taken through the line 3—3 in FIGURE 1; and

FIGURE 4 is a perspective view showing the armor plating construction in a semi-collapsed position.

The collapsible armor plate of this invention comprises a rigid vertical rear panel **10**, a vertical front panel **12**, and vertical side panels **14** and **16** hinged together at the vertical edges by means of hinges **18**, **20**, **22**, and **24**. The top and bottom of the assembled vertical panels are closable by means of a top panel **26** having a vertical flange **26***a* and pivoted to the top horizontal edge of front panel **12** by means of a hinge **28**, and a bottom panel **30** having a vertical flange **30***a* and pivoted to the bottom horizontal edge of front panel **12** by means of a hinge **32**. When the top and bottom panels **26** and **30** are in the closed position; i.e., when the flanges **26***a* and **30***a* abut the rear wall **10**, a rigid box-like structure is formed. However, when the top and bottom panels **26** and **30** are pivoted outwardly, as shown in FIGURE 4, the structure then becomes collapsible.

The inner side of the front panel **12** is lined with a self-sealing liner **34** comprised of any of the suitable well-known rubber or plastic compounds used, for example, for lining fuel tanks of military aircraft. Flexible material **36**, such as reinforced canvas or other fabric, to provide additional resistance to projectile travel, is secured by cementing, or by any other suitable means, at various vertical positions spaced along the rear panel **10** and at various intermediate vertical positions along the liner **34** of the front wall **12**. The material **36** is thus corrugated, or formed into a cellular honeycomb or corrugated configuration, the cells of which are vertically oriented and fillable with sand **38** or other granular material.

For the purpose of mounting the armor plate on the apparatus to be protected; for example, on a tank, truck, or other military-type vehicle, or on a shelter, or to form a shelter, holes **40** are provided in each of the four corners of the rear plate **10** and in the corresponding locations of the flanges **26***a* and **30***a* when in the closed position.

For transporting the armor plate, the apparatus is emptied of sand by simply removing the bolts securing the bottom flange **30***a* to the rear panel **10**, thereby permitting the opening of the bottom panel **30** and draining the sand from the cells of the honeycombed or corrugated flexible material **36**. To reduce the volume of the then-emptied armor plate, the upper panel **26** may be pivoted from its horizontal position to a vertical position, and the entire structure may be collapsed, the material **36** compressing into folds. In this condition, the armor plate has minimum weight and minimum volume.

For actual use on a military vehicle, the armor plate may be installed while empty and then filled with sand or other granular material prior to actual need. In the event that a projectile pierces the front wall **12**, only the sand in a cell adjacent the rupture of the front wall is permitted to escape to the extent not otherwise prevented by the self-sealing action of the liner **34**. This is highly advantgeous as compared with a sandbag which is generally rendered entirely ineffective once it has been ruptured and the sand is permitted to flow from it.

Thus, the armor plate of this invention has the advantages of a construction in which the granular material **38** is not removable, and yet retains most of the advantages of the ordinary sandbag which may be filled in the field prior to use.

Although the armor plate is shown as a complete assembly mountable on apparatus to be protected, it is within the purview of this invention that the structure illustrated may comprise a permanent part of the apparatus, e.g., the panel **10** may constitute the inner wall of a vehicle to which the remaining panels are hinged. Moreover, while canvas or fabric is illustrated as the material for forming the corrugation, many other materials are also available; for example, the material may be comprised of hinged sheet metal or it may be comprised of other bulletproof-type flexible materials which may be secured in a manner similar to canvas.

Many other modifications and adaptations will at once become apparent to persons skilled in the art, and it is intended therefore that this invention be limited only by the scope of the appended claims as interpreted in the light of the prior art.

What is claimed is:

1. A laminated armor plate comprising:

first, second, third, and fourth rectangular side panels hinged at adjacent parallel edges to form a collapsible rectangular box-like structure with two opposing open ends;

a collapsible cellular structure having non-communicating cells, said cellular structure being secured to

two opposing side panels interior of said box-like structure, said cellular structure being collapsible with said box-like structure and the cells thereof being oriented in the direction of the open ends; and means for closing the open ends of said box-like structure, said cells being fillable with granular material prior to closing one of said open ends.

2. The invention as defined in claim 1 wherein one of said first, second, third, and fourth side panels is a front side panel, and wherein the interior of said front side panel is lined with a self-sealing liner.

3. The invention as defined in claim 2 wherein said open ends are closed by means of fifth and sixth rectangular panels hinged to opposite edges of said front panel.

4. The invention as defined in claim 3 wherein said front panel is in a vertical plane, and wherein said fifth and sixth panels are top and bottom panels, respectively.

5. The invention as defined in claim 4 wherein the panel opposite said front panel is a rear panel; and wherein said top and bottom panels are provided with vertical flanges abutting said rear panel when in a closed position.

6. The invention as defined in claim 5 wherein said granules are sand.

7. The invention as defined in claim 6, and means for securing said rear panel to a device to be protected.

8. The invention as defined in claim 1 wherein said open ends are closed by means of fifth and sixth rectangular panels hinged to said box-like structure, said fifth and sixth rectangular panels when in a closed position rendering said box-like structure non-collapsible.

References Cited by the Examiner

UNITED STATES PATENTS

787,065	4/1905	White.	
2,348,130	5/1944	Hardy	109—84
2,512,522	6/1950	Denny	220—6
2,550,830	5/1951	Lewis et al.	220—6

FOREIGN PATENTS

1,042,430	10/1958	Germany.

HARRISON R. MOSELEY, *Primary Examiner.*

REINALDO P. MACHADO, *Examiner.*

L. J. SANTISI, *Assistant Examiner.*