Sept. 2, 1941. I. M. WELLS ET AL 2,254,463

MEANS FOR CONSTRUCTING AND RECONSTRUCTING ROAD SURFACES

Filed June 13, 1939 2 Sheets-Sheet 1

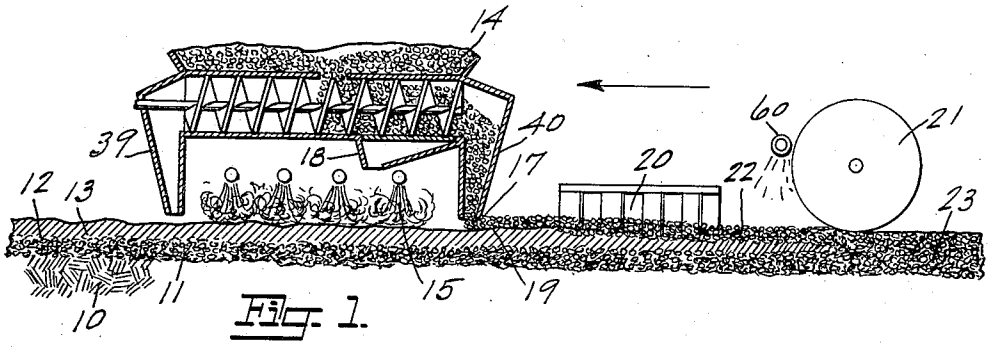

Fig. 1.

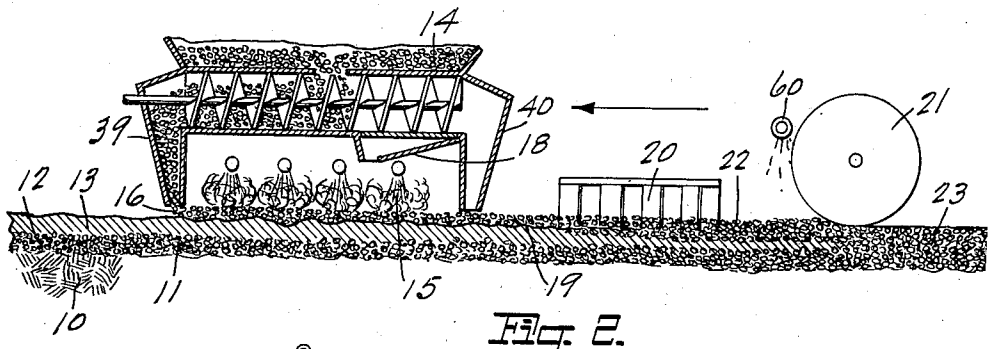

Fig. 2.

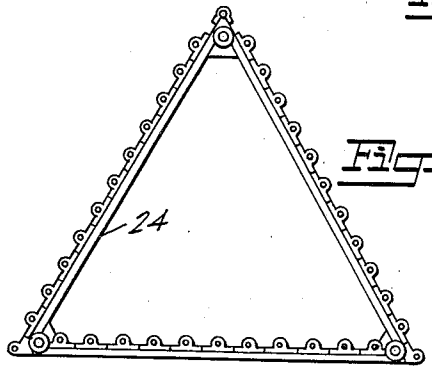

Fig. 3.

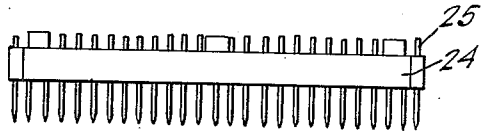

Fig. 4.

Inventors
Ira M. Wells
Howard A. Olds
By Philip A. Grudell
Attorney

Sept. 2, 1941. I. M. WELLS ET AL 2,254,463

MEANS FOR CONSTRUCTING AND RECONSTRUCTING ROAD SURFACES

Filed June 13, 1939 2 Sheets-Sheet 2

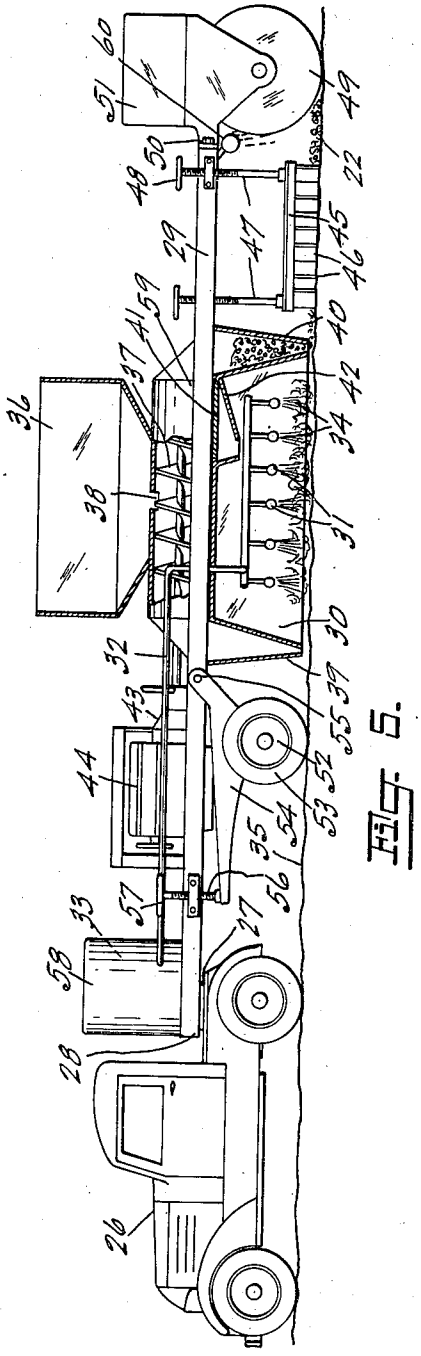

FIG. 5.

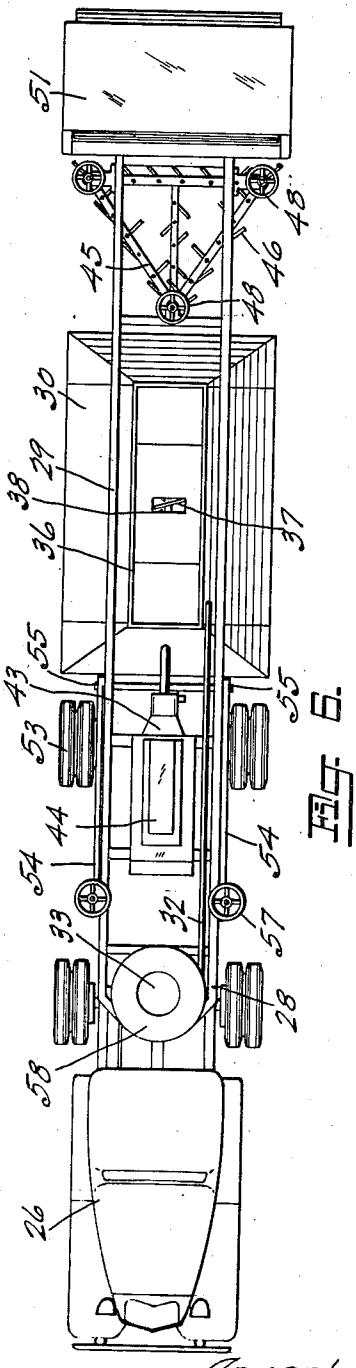

FIG. 6.

Inventors
Ira M. Wells.
Howard A. Olds
By Philip A. Brindell
Attorney

Patented Sept. 2, 1941 2,254,463

UNITED STATES PATENT OFFICE

2,254,463

MEANS FOR CONSTRUCTING AND RECONSTRUCTING ROAD SURFACES

Ira M. Wells, Oakland, and Howard A. Olds, San Francisco, Calif., assignors to Spears-Wells Machinery Company, Inc., Oakland, Calif., a corporation of California

Application June 13, 1939, Serial No. 278,846

10 Claims. (Cl. 94—39)

This invention relates to a new type of road surface and to the method and apparatus necessary for producing a non-skid surface on asphaltic roads.

When thermo-plastic materials, such as asphalt and other bituminous materials are used in road construction, aggregate, such as crushed rock, is mixed with the plastic material while it is in a semi-liquid to liquid condition due to the application of heat, and while the mixture is in a heated condition it is spread over a base or subgrade, levelled and rolled.

In some cases the surface of such construction is apt to be porous and may permit water to seep through and thus eventually destroy the base or subgrade. For the purpose of overcoming this possibility, a mixture containing an excess of plastic is spread, levelled and rolled over the first layer to form a seal against water seepage, and this superposed layer upon cooling provides a comparatively smooth, and in some cases even a skiddy surface, which is obviously quite familiar to the average automobile driver. This skiddy condition is particularly pronounced after the road has been in use for some time and especially so when slightly wetted following a dry spell of weather. Thus it is clearly evident that a surface which is too rich in bitumens presents this dangerous problem.

Several methods of reconditioning such surfaces are in current use, including discing, cold planing, and heater planing. The principal disadvantage in these methods lies in the fact that surface material is removed and wasted and the underlying cause has not necessarily been eliminated. Another method involves the application of new mix, including aggregate and binder, which obviously aggravates the condition, since more bitumen is added to the road surface which is already over-rich in bitumen.

This invention is adapted to overcome all of the above-mentioned disadvantages and to provide a road surface of substantial permanency and with a non-skid surface.

In addition to the skiddy surface produced through the sealing layer as previously outlined, this same condition develops in initially non-skid surfaces through use of the road, in which the aggregate, through capillary action of the plastic and through gravitational influence of the aggregate, gradually works down through the plastic to form an interfitting, compacted mass on the subgrade or base, leaving at the surface a layer of practically pure plastic.

This settlement of aggregate is materially expedited by the heat of the sun's rays and by traffic passing over the road, particularly heavy vehicles such as trucks, the wheels of which react through the resiliency of the plastic to force the rigid aggregate particles down through the mass, and the result is a skiddy surface and rapid formation of ruts, corrugations and chuck holes. Thus the surface life of a new road is frequently of comparatively short duration as related to the element of safety. Thus the newly-completed road may be in excellent condition, level and non-skid, but within a comparatively short period of time all of the desirable advantages disappear. The lower layer or substructure has improved—has formed into a compacted mass of aggregate with just sufficient plastic incorporated to fill the interstices and bind the aggregate together, which, if it extended to the surface, would prove to be an ideal structure, and this invention is directed toward accomplishment of such a result.

In a used road of the character just described we have an excess of plastic material or binder in the upper strata or superstructure, and which is directly associated with the compacted and aggregate-binder balanced lower strata or substructure; therefore, if the upper plastic-rich strata are provided with additional aggregate without the addition of any plastic or binder, a non-skid surface results, and the surface will retain its non-skid characteristics and remain free of ruts and corrugations for a considerable length of time, and this procedure is the essence of this invention.

The objects and advantages of this invention therefore are as follows:

First; to recondition plastic-type road surfaces by heating the surface to a condition of semi-fluidity and applying additional aggregate only, to the fluid mass.

Second; to provide a new type of road superstructure consisting of additional aggregate imbedded in an aggregate-lean, pre-laid, plastic road surface, with the aggregate displacing plastic to a point where the total plastic functions only as a binder and filler between the particles of aggregate.

Third; to carry out the above-outlined process by heating the surface or superstructure preferably to a depth equal to the depth of the aggregate-lean mass, and to apply additional aggregate in either its natural state or cleaned and dried, and either cold or heated, and either before, during, or following the heating of the road surface; to mix the aggregate with the semi-

liquid heated plastic, in situ, and to thereafter force the aggregate into the semi-liquid heated plastic, such as by rolling or tamping.

Fourth; to provide apparatus for carrying out the various steps of this process and to include a heater for heating the road surface or superstructure; heating means for heating the aggregates; a hopper for aggregate, and distributors for distributing the aggregate in predetermined relation to the heater, such as in advance of, or following the heater, or in a location within the confines of the heater; road-mix means for mixing the distributed aggregate with the surface plastic; and a roller for imbedding the aggregate in the plastic.

In the following description, "additional aggregate" refers to any solid material which is suitable for use as a body material in connection with thermo-plastics used in road construction. The term "plastic" or "thermo-plastic" refers to any type of plastic material which is softenable by heat and suitable for road construction of the asphalt type. "Semi-liquid" refers to any condition of the plastic ranging from tacky to liquid.

In describing the invention, reference will be made to the accompanying drawings, in which:

Fig. 1 is a diagrammatic view illustrating the application of the process in which the aggregate is distributed following heating of the road surface.

Fig. 2 is a view similar to Fig. 1 except that the aggregate is distributed in advance of the road surface heating operation.

Fig. 3 is a top plan view of a road-mixer suitable for use with this process.

Fig. 4 is a rear elevation of Fig. 3.

Fig. 5 is a side elevation of apparatus suitable for carrying out this process and is shown partly in section.

Fig. 6 is a top plan view of Fig. 5.

The usual plastic or bituminous type of road is built up with a subgrade of clay, rock or gravel, upon which is sometimes placed a base or foundation of concrete. Upon this subgrade or upon the base is laid a substructure consisting usually of a coarse aggregate mixed with a suitable binder, such as bituminous material of the asphalt type. This mixture is often provided in the form of a plant-mix delivered in a heated condition, while in some other types of construction, the dry aggregates, such as coarse crushed rock, is distributed over the subgrade or base, following which the heated binder in a liquid condition is distributed over the laid rock. Following this last step, a mixture of finer aggregate and binder, suitably heated, is applied to form the superstructure, which is then leveled and rolled.

Such structures, and particularly the superstructures are comparatively rich in binder and therefore exhibit surface aggregate only when the structure is new. The structure has inherent resiliency when cold and becomes plastic at slightly elevated temperatures, particularly under the influence of the heat of the rays of the sun, and may even reach a certain degree of tackiness at summer temperatures. For these reasons, the aggregate which is initially exhibited at the surface is gradually inundated through capillary action, gravity, and the pressure of traffic, the aggregate gradually settling down to the substructure and being gradually compacted into a comparatively solid mass of aggregate with practically pure binder or plastic remaining in the superstructure.

It is this plastic-rich superstructure upon which this new process is conducted, and the process and apparatus is adaptable to new road building as well as to the reconstruction of old roads, and in this connection will be explained as applied to old roads.

Referring to Figs. 1 and 2, **10** indicates the usual subgrade upon which the substructure **11** is formed. The original superstructure was laid on this substructure but has deteriorated due to the causes previously mentioned, into a lower layer **12** which is composed of a densely-compacted mass of aggregate, and an aggregate-lean upper layer **13**.

In carrying out this process, a supply of additional aggregate **14**, together with means for distributing the aggregate, and heating means **15** for heating the road surface, is provided. The distributing means is adapted to distribute the additional aggregate in predetermined relation to the heating means **15**, such as in advance of the heating means as indicated at **16**, Fig. 2, or following the heating means as indicated at **17**, Fig. 1, depending upon the characteristics of the plastic and upon climatic conditions. Under specific or unusual conditions it may be necessary to distribute the aggregate within the limits of the heater, such as through the chute **18**.

Heating of the road surface must be carefully conducted and controlled in accordance with the characteristics, such as the flash point of the material which forms the road surface. Overheating will deteriorate or ruin the plastic. Similar care must be exercised in the selection of the aggregates as to strength, size, volume and moisture, and treatment, such as cleaning, heating and drying, to insure maximum degree of binding action or affinity between the aggregate and the plastic material. These elements and variables are conveniently and commercially controllable.

When the additional aggregate is distributed in advance of the heating means, the aggregate becomes highly heated and to a degree blankets the road surface, and therefore will prove efficacious with some types of plastics, especially thermolabile plastics or those having a low flash point, while if the aggregate is distributed within the confines of the heating means, as from the chute **18**, the heat is applied directly to the road surface for only a portion of the total heating time and blanketed by the aggregates during the balance of the heating period. This procedure is preferable for more thermostable plastics and for those having a higher flashpoint, while application of aggregate following complete heating of the road surface is preferable for plastics having a high flashpoint and for those having a suitable degree of thermostability.

In some instances, drying or heating of the aggregate previous to distribution may prove advantageous and may be conducted either through separate heating means (not shown) or through heat derived from the road surface heating means as indicated by the close relation of the distributors and chutes to the road surface heating means.

The aggregate is distributed according to requirements and may be permitted to settle through its own weight into plastic which is in a suitably fluid condition, but is preferably rolled into the surface promptly; or the aggregate mixed in situ with the semi-fluid material, as

by means of a road-mixer 20, following which a roller 21 or other suitable means having suitable inertia forces the aggregate 22 into the semi-fluid mass 19, converting the superstructure into a correctly-balanced structure as indicated at 23, with the additional aggregate projecting slightly up through the plastic and with the semi-fluid plastic material sufficient in quantity relative to the quantity of additional aggregate to form an effective binder and to fill all voids.

Thus the aggregate imbeds into the surface, which surface through rolling or other compressive treatment is level and non-skid, and may be considered as a comparatively permanent structure, since excess of plastic can be fully compensated by this process, leaving no further room for settlement of aggregate, and under such complete compensation capillary action cannot take place to a sufficient degree to recreate the original skiddy surface.

In Fig. 3 is illustrated a road mixer which is suitable for carrying out the mixing step of this process, and has the general characteristics of a spike-tooth harrow, and consists of a frame 24 provided with a multiplicity of teeth or spikes 25.

An apparatus suitable for carrying out the complete process is illustrated in Figs. 5 and 6, and is shown complete with traction means and roller, and consists of a tractor 26 provided with a fifth-wheel 27 upon which the front end 28 of the reconstruction machine is mounted and supported.

The machine consists of a frame 29 carrying a road-surface heater 30 in which is mounted a plurality of burners 31 which are supplied with fuel through a suitable feed line 32 from a supply tank 33. The flames 34 from the burners are indicated as directed down onto the road surface for converting the top material of the road into a semi-fluid mass. However, the heating of the road is not limited to this specific method of heating or to the specific structure shown.

A hopper 36 is mounted on the machine for carrying an additional supply of aggregates, which may be distributed by any suitable means, as by a screw conveyor 37 which is fed through the passage 38 formed in the bottom of the hopper. The screw conveyor is operable in either direction to feed at will through either the forward chute 39 or rear chute 40, or, by withdrawing a slide 41 which is provided as a closure for the intermediate chute 42 and operating the conveyor for follow distribution, the aggregate will discharge through the intermediate chute for the step system of heating, in which the road is heated directly in the first portion of the heating cycle and followed by further heating through a blanket of aggregate and simultaneously heating the aggregate distributed. Thus the point of distribution is selectable at will in view of the reversing mechanism 43 associated with the driving means 44 for the conveyor.

Removably and adjustably mounted rearwardly of the road-surface heating means is a road mixer which may be of the form illustrated in Figs. 3 and 4, or, as shown in Figs. 5 and 6, may consist of a frame 45 provided with a plurality of cutting-in and mixing blades 46, and also provided with adjusting means in the form of screws 47 and handwheels 48 for three-point support and adjustment.

Mounted in follow relation to the mixer is a roller 49 which is removably and supportingly attached to the rear end of the frame 29 as indicated at 50. Suitable weighting means 51 is provided to provide the necessary inertia to force the aggregate 22 into the heated plastic surface, and when desired, down to the original aggregate which is bedded on the substructure.

In some cases, the machine may prove unwieldy, or for other reasons it may be desirable to use a separate roller instead of a directly associated roller. In such cases, removal of the roller 49 would leave the rear end of the machine without support.

For this reason a set of wheels 52 is mounted ahead of the heating means and thus, due to their leading position, the rubber tires 53 are not exposed to the heat from the heating means or to the heat from the heated road surface.

These wheels must be made non-supporting with reference to the machine when the roller is attached, in which case the wheels may either be removed or may be converted into a non-supporting condition. This non-supporting condition is arranged by mounting the wheels on a separate frame 54 which has its rear end pivotally attached to the frame 29 at 55, and its forward end normally free, under which conditions the wheels will merely track along with the machine but will offer no support, and the machine will thus be transported and supported solely by the tractor 26 and roller 49.

When the roller is to be released or detached from the machine, the screws 56 are adjusted down by means of handwheels 57 to transfer support of the machine to the wheels 52 with their associated tires 53.

When the machine is supported by the wheels 52, the overhanging weight will tend to tip the rear end of the machine down, therefore an overbalancing weight is provided at the forward end, and is indicated as consisting of a heavy casting 58 which is internally hollow as indicated at 33 to form the storage reservoir for fuel for the burners. Thus, no support other than that of the set of wheels is required, and the entire operating portion of the machine is clear and free of interfering elements.

The aggregate may be heated and dried by associating the hopper 36 and conveyor housing 59 with the road surface heating means, or a separate heater (not shown) may be provided for the purpose.

Suitable water distribution is provided, as shown at 60 for wetting the surface of the roller to prevent sticking, and for supplying moisture to any portion of the road surface or materials in conformity with requirements.

The road mixer functions as combined mixing and leveling means, particularly that form illustrated in Figs. 1, 2, 5 and 6 in which the mixing blades 46 are mounted in suitable relation to each other both spacedly and angularly to carry out both functions, and the adjustment provided by the screws 47 permit the forward and rearward ends of the mixer to be relatively adjusted to provide for mixing of the material followed by leveling of the mixed material.

Thus the machine is adaptable to varying materials and conditions, and can be used for merely heating the road surface and distributing aggregates in predetermined relation to the path of travel of the heater or to the area being heated; or, mixing and/or rolling can be incorporated in the process according to requirements which may contribute toward the attainment of specific results.

This process can be carried out by means other

than that illustrated, such as by hand methods, and it will be understood that variations in the process, and in construction and arrangement of parts, which variations are consistent with the appended claims may be resorted to without detracting from the spirit or scope of the invention, or sacrificing any of the advantages thereof.

We claim:

1. A road conditioning machine comprising a vehicle, heating means for heating the surface of a road and rendering the material thereof into a semi-fluid mass and supported by said vehicle; and aggregate distributing means comprising a distributing drum mounted in a plane above said heating means and extending longitudinally thereof and having outlets at the front, middle and rear and supported by said vehicle for distributing aggregate over said surface along the path of said heating means and selectable at will as to the point of distribution for distribution in advance of, within the confines of, or following said heating means, to compensate for variations in the physical characteristics of said aggregates and for atmospheric conditions.

2. A structure as defined in claim 1 in which mixing means is mounted in follow relation to said heating means and distributing means for mixing the distributed aggregate with the semi-fluid mass, and in which a roller is detachably mounted in follow relation to said mixing means for forcing the aggregate into the heated surface material and for smoothing the road surface and forms a support for the rear end of said vehicle when attached, and an auxiliary wheeled support for supporting said rear end when said roller is detached.

3. A road superstructure conditioning machine comprising tractive means and a vehicular support; a heater for heating the surface of a road and carried by said support; aggregate storage and feeding means supported in a plane above said heater and in feeding relation thereto and having a plurality of outlets for feeding aggregate onto said road surface to various close locations related to said heater for association with the road surface operated upon by said heater, and supported by said vehicular support, and including means for heating and drying said aggregate previous to distribution thereof onto the road surface, said aggregate feeding means having selective control means for selective feeding of aggregates in advance of, within the confines of, or following said heating means for the most suitable conditioning of the aggregates previous to embedment.

4. A road superstructure conditioning machine comprising; tractive means and a vehicular support; a heater for heating the surface of the road and carried by said support; aggregate storage and associated distributing means carried by said support in distributing relation to said heater and having outlets for distributing aggregate to various locations relative to said heater, onto the surface of the road, and including means for heating and drying said aggregate previous to distribution thereof onto the road surface, and also including mixing means interposed between said feeding means and said compressive means for mixing the aggregates with the heated road surface material, said distributing means including selective control means for distributing the aggregates from any one of several locations relative to said heating means.

5. A road superstructure conditioning machine comprising tractive means; a heater for heating the surface of a road; aggregate storage and aggregate feeding means for feeding aggregate onto said road surface for association with the surface operated upon by said heating means; compressive means for forcing said aggregate into said heated surface; means for heating and drying said aggregates previous to distribution thereof onto the road surface and associated with said feeding means and storage means, and mixing means interposed between said feeding means and said compressive means for mixing the aggregates with the heated road surface material and in which said compressive means comprises a roller detachably connected to said machine and coincidently forming supporting and transporting means for the rear end of the machine; and a wheeled support for supporting said rear end when said roller is disconnected.

6. A road conditioning machine comprising; tractive means; a frame; an intermediate wheeled support for said frame and means for making said wheeled support non-supporting at will; overbalancing means for overcoming the weight of the rear end of the machine when the machine is supported by said wheeled support; a roller detachably connected to the rear end of said machine and forming a support therefore when connected; a heater carried by said frame for heating the surface of a road; a hopper, and aggregate distributing means associated therewith for distributing aggregates from any one of a plurality of points at will; means for heating said aggregates; and a road mixer carried by said frame in follow relation to said heater and in advance of said roller.

7. In a road building machine including vehicular supporting means and a road surface heater; a reversible conveyor screw and driving means therefor, and aggregate storage means mounted in feeding relation to said road surface heater and carried by said vehicular supporting means and having end and intermediate discharge passages leading to a plurality of points relative to said road surface heater and including manual control means therefor for selectively distributing aggregates from said passages to any one of several points including; in advance of, within the confines of, and following said heating means, and comprising a gate for the intermediate passage, with the end passages controlled by said screw, whereby the degree of heating of said aggregates following distribution is controllable at will to suit the characteristics of the aggregate and atmospheric conditions.

8. A road reconditioning machine comprising; a vehicular support and a road surface heater carried by said support; aggregate storage means and a manually-controllable reversible conveyor screw and driving means therefor carried by said support in distributing relation to said heater and having intermediate and end discharge passages and chutes communicating therewith a manually-controllable gate for the intermediate passage, the end passages being controlled by the direction of rotation of the conveyor screw directing aggregates through said chutes for distribution on the road surface selectively to a plurality of points relative to said heater, and including points within, in advance of, and following said heater for controlling the heat applied to the aggregate by the heater following deposit on the road surface.

9. A structure as defined in claim 8 in which said aggregate storage means and conveyor screw is mounted above and in heat exchange relation

to said road surface heater, for preliminary heating of the aggregate previous to distribution to the road surface.

10. A road surface reconditioning machine comprising; a vehicular support; a road surface heater carried by said support; a hopper for aggregate carried by said support; a feed screw and a housing therefor, and driving and control means for reversible operation thereof said housing having a plurality of discharge passages including end passages and an intermediate passage, a manually controllable gate for the intermediate passage, with the other passages controllable through the direction of operation of said feed screw, and chutes communicating with said passages and leading to various points including in advance of, within, and following said heater for distribution of the aggregate on the road surface in predetermined relations to said heater in accordance with the practical heat requirements of the aggregate following distribution.

IRA M. WELLS.
HOWARD A. OLDS.