US 20140008511A1

(19) **United States**

(12) **Patent Application Publication**

(10) **Pub. No.: US 2014/0008511 A1**

(43) **Pub. Date: Jan. 9, 2014**

Xammar Bove

(54) **FALL PROTECTION DEVICE**

(75) Inventor: **Pedro Xammar Bove**, Barcelona (ES)

(73) Assignee: **INVERAL, S.A.**, Barcelona (ES)

(21) Appl. No.: **13/542,893**

(22) Filed: **Jul. 6, 2012**

Publication Classification

(51) **Int. Cl.**
E04G 21/32 (2006.01)

(52) **U.S. Cl.**
USPC **248/636**

(57) **ABSTRACT**

A fall protection device including a frame including a vertical stanchion, a boom and a strut, wherein the strut has a male unit extending into an opening formed at a female unit, the units cooperating and sliding with respect to each other at the level of the opening when a compression force is transmitted to an end of the trust. The female unit is provided with housings for respective cylindrical or spherical elements that roll or rotate by friction with the male unit when the male and female units slide with respect to each other, the dimensions of the elements being such that they interfere with the outer profile of the male unit, pressing and causing the successive plastic deformation of the male unit during its movement relative to the female unit.

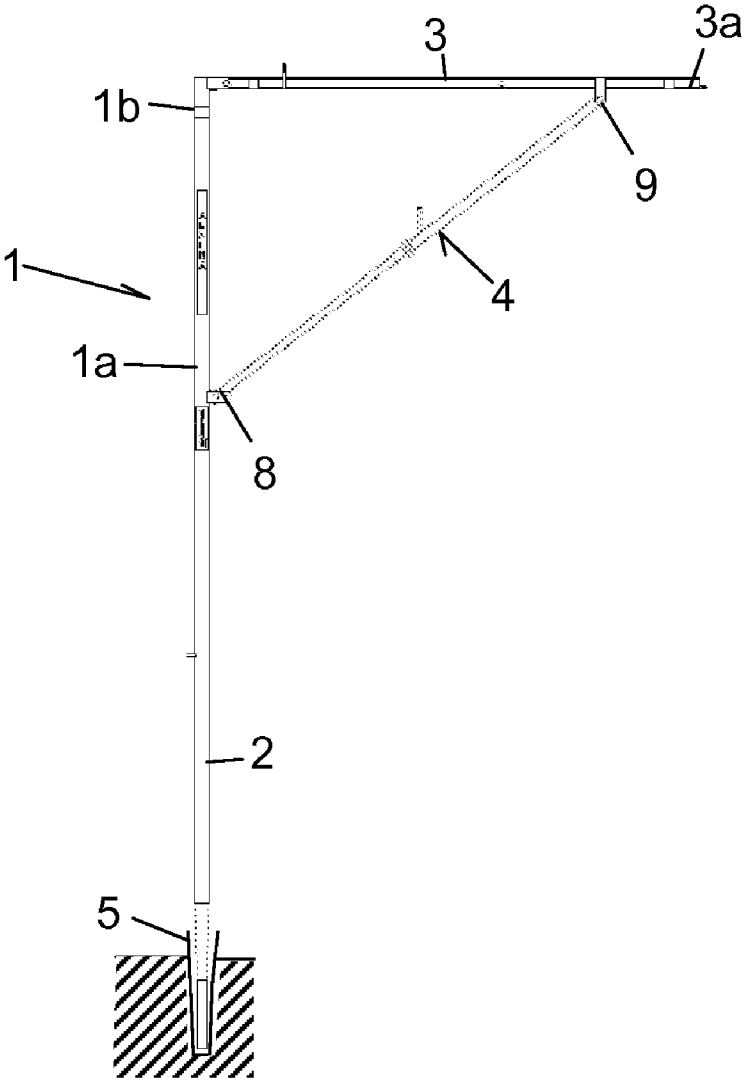

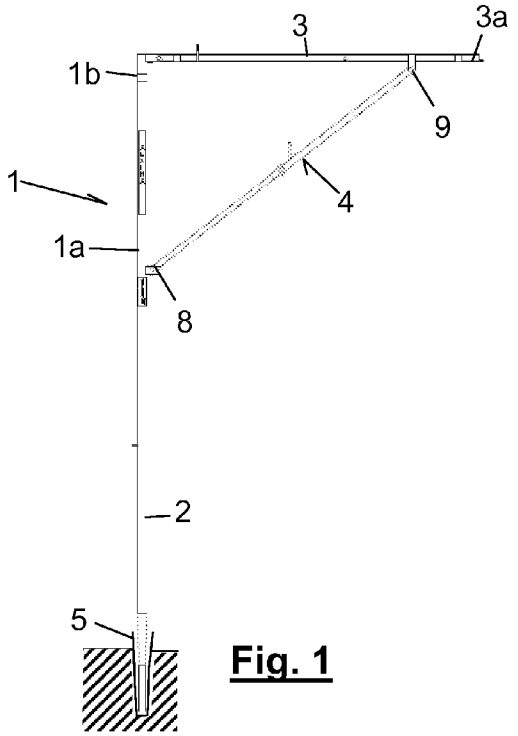

Fig. 1

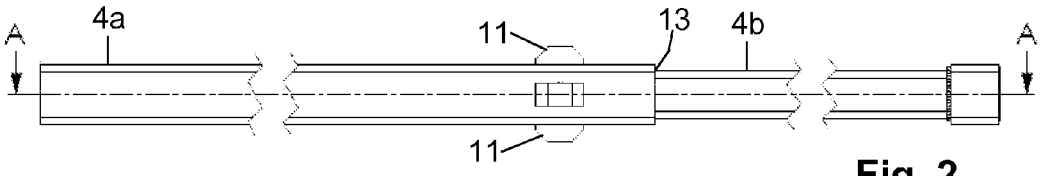

Fig. 2

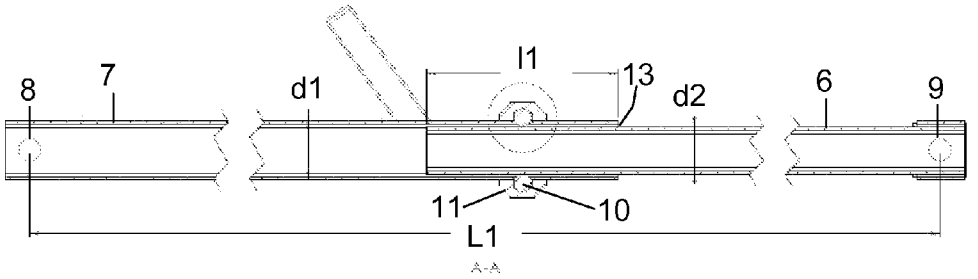

Fig. 3

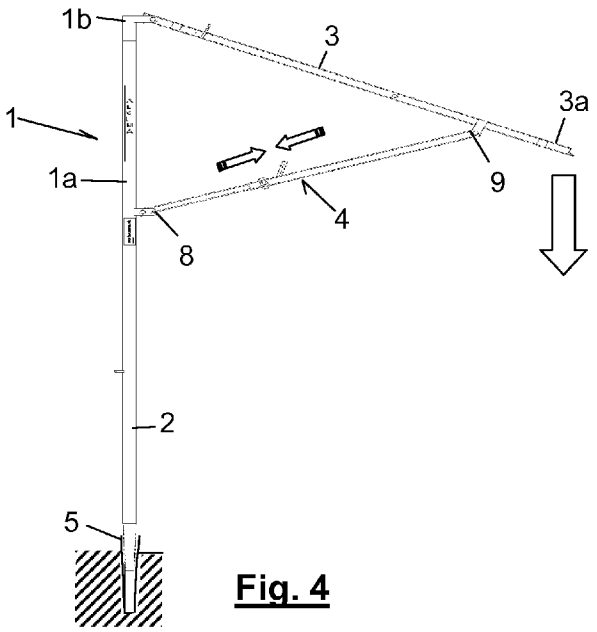

Fig. 4

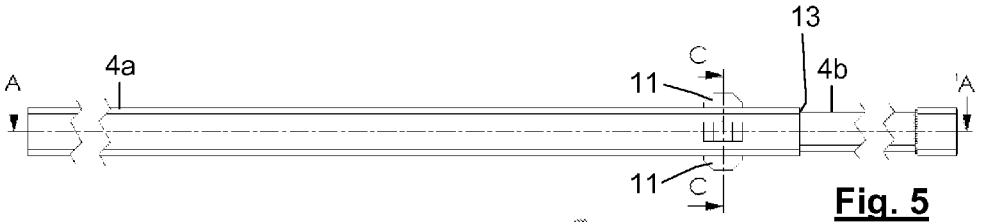

Fig. 5

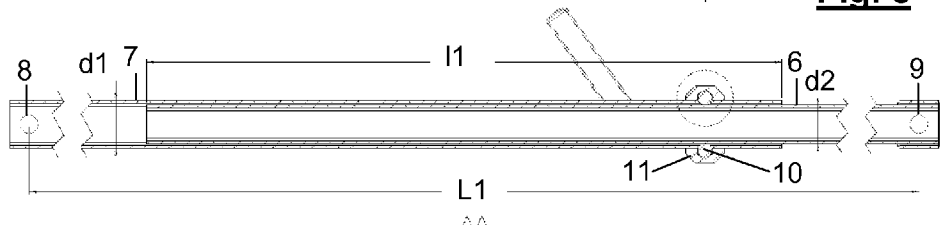

Fig. 6

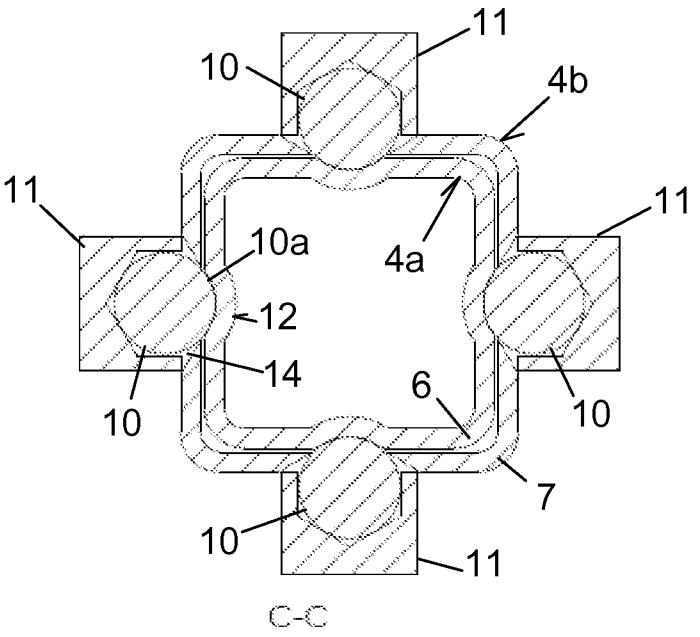

Fig. 7

FALL PROTECTION DEVICE

TECHNICAL FIELD OF THE INVENTION

[0001] The invention relates to a fall protection device of the type comprising a frame including a vertical stanchion, a boom to which an operator can be fastened and a strut with cushioning means to cushion the pivotal movement of the boom towards the stanchion caused by a downward traction force occasionally applied at a distal end of the boom when the operator falls accidentally.

BACKGROUND OF THE INVENTION

[0002] The Patent document WO2004 104326 describes a fall protection device for construction works comprising anchorage means to a fixed element of the construction, made up of a casing, and linking means arranged between said anchorage means and fastening means of an operator. The linking means comprises a vertical stanchion, having a lower end adapted for insertion into the casing, and a boom that is joined to a top portion of the vertical stanchion, the boom having a distal end wherein the fastening means of the operator are connected. This device further comprises a strut having a first end connected to an upper portion of the vertical stanchion and a second end connected to the boom in order to cushion the pivotal movement of the boom towards the stanchion caused by a downward traction force occasionally applied at the distal end of the boom when an operator falls accidentally.

[0003] For the purpose of cushioning the pivotal movement of the boom the strut is provided with cushioning means that absorbs the force that is transmitted to the fixed element of the construction when the distal end of the boom is suddenly required due to traction loads as a consequence of an operator falling.

[0004] Obviously, this absorption of forces causes that the operator is not held too brusquely when the fastening means pull him in order to arrest the fall.

[0005] In the fall protection device according to WO 2004104326, the strut comprises a first tubular element coupled at one of its ends to the vertical stanchion whereas its other end telescopically receives one end of a second tubular element, which has its other end coupled to the boom. The strut is further provided with a shock spring arranged in the interior of the tubular elements.

[0006] The shock spring performs the function of absorbing, in the form of elastic energy, part of the force that the operator applies on the fall protection device and which is transmitted to the fixed element of the construction.

[0007] The main drawback of this solution is that there are specific security regulations, applicable in certain countries, which prohibit the incorporation of spring elements in devices, tools or apparatus in the working construction environments if they play a role or contribute to the security of the workers.

[0008] The provision of plastically deformable parts in shock-absorbers for safety lines are known in the art. This is the case of the shock-absorber described in patent document EP 2316534 and the potential and kinetic absorbing device of the patent document FR2920997.

[0009] Patent document GB9420899 describes an in-line shock absorbing arrester adapted to be connected between two lengths of safety line, comprising a telescoping piston and cylinder assembly in which the movement of the piston in the cylinder, such as occurs in the event of a shock, causes the successive rupturing of a plurality of plugs, thereby to retard the movement of the piston.

[0010] It can be seen that these solutions cannot be applied directly on the strut of a fall protection device such as that described above since the mentioned strut works under compression whereas the known solutions work under traction.

[0011] On the other hand, it must be noted that the known solutions are based on providing the devices with a series of fuse elements which will deform, one after another, while a relative movement between the two components of the device occurs. In order to assure an as uniform as possible absorption said fuse elements must be very close to one another or the start of deformation of an element must overlap in time with the end of deformation of an element preceding it. This fact makes the application of this solution inappropriate or overly expensive when cushioning means, or in this case the strut, are to be provided with a relatively long lineal retraction path, for example of about 40 cm, when an operator falls.

[0012] The main objective of the invention is a fall protection device provided with a strut with cushioning means offering a very regular performance if an operator falls, which is not subjected to the fact that it must overcome a high threshold value of force for operation, which can offer a retraction path of about 40 cm due to the fall of an operator and especially which is of simple construction with few components and also does not require using specific plastic components.

SUMMARY OF THE INVENTION

[0013] The enhanced fall protection device proposed herein satisfactorily achieves the objectives indicated. Specifically, to this end, the fall protection device according to the invention comprises a frame including a vertical stanchion rotatably mounted in a support casing, a boom connected to a top portion of the vertical stanchion, and a strut having a first end connected to an upper portion of the stanchion and a second end connected to the boom in order to cushion the pivotal movement of the boom towards the stanchion caused by a downward traction force occasionally applied at a distal end of the boom, wherein the strut has a male unit extending into an opening formed at a female unit, said units cooperating and sliding with respect to each other at the level of the opening when a compression force is transmitted to the second end of the trust, and wherein the female unit is provide with housings for respective cylindrical or spherical elements that roll or rotate by friction with the male unit when the male and female units slide with respect to each other, the dimensions of said elements being such that they interfere with the outer profile of the male unit, pressing and causing the successive plastic deformation of the male unit during its movement relative to the female unit.

[0014] In an embodiment of the invention, the male and the female units of the trust respectively consist of an inner and outer concentric tubular sections designed to slide into one another.

[0015] In a preferential embodiment of the invention, the inner and the outer tubular sections have essentially quadrangular cross sections, and the cylindrical or spherical elements are four, each one facing a respective face of the inner tubular section.

[0016] According to another feature of the invention, the outer tubular section has drill holes through which a minor portion of respective spherical elements extends towards the interior of the outer tubular section to contact the inner tubular

section, each spherical element being enclosed, over an associated drill hole and with the capacity of rotation, within a housing.

[0017] The housings for the spherical elements can consist of respective concave and originally separated parts firmly coupled to the exterior surface of the outer tubular section and dimensioned to accommodate the respective spherical element.

[0018] The drill holes are preferably truncated-cone hole shaped, comprising an internal opening facing the interior of the outer tubular section and an external opening facing the housing, the internal opening having a smaller cross section than the external opening.

[0019] The invention envisages the possibility of that the boom is pivotally connected to the top portion of the vertical stanchion.

[0020] In addition, the first and second ends of the strut can be pivotally connected to the upper portion of the stanchion and to the boom, respectively.

BRIEF DESCRIPTION OF THE DRAWINGS

[0021] FIG. **1** is a side view of a fall protection device according to the invention in an equilibrium situation, i.e., the boom not being subjected to any extraordinary stress due to an accidental fall of an operator;

[0022] FIG. **2** is a detailed view of the strut of the fall protection device of FIG. **1**;

[0023] FIG. **3** is a sectioned view of the strut of FIG. **2** according to the plane of section AA of FIG. **2**;

[0024] FIG. **4** is a side view of the fall protection device of FIG. **1** subjected to an extraordinary stress due to an operator falling exerting a force on the boom in the direction indicated by the arrow;

[0025] FIG. **5** is a detailed view of the strut of the fall protection device according to the position that it adopts in FIG. **4**;

[0026] FIG. **6** is a sectioned view of the strut of FIG. **5** according to the plane of section AA of said FIG. **5**; and

[0027] FIG. **7** is a cross-section view of the strut of FIG. **6** according to the plane of section CC of said FIG. **6**.

DETAILED DESCRIPTION OF THE INVENTION

[0028] The fall protection device **1** of FIG. **1** comprises, in a known manner, a vertical stanchion **2** the lower end of which is configured by way of male pivot having the capacity to rotate about its longitudinal axis for fitting in a casing **5** which is fixed to a fixed component of a structure under construction. The casing **5** is preferably introduced into a concrete mass before it sets such that its upper opening is accessible for fitting the male pivot of the vertical stanchion **2**. This casing **5** can have the shape described in patent document WO 2004104326.

[0029] FIG. **1** shows that the fall protection device **1** comprises a boom **3** pivotally connected to a top portion **1***b* of the vertical stanchion **2**, and a strut **4** having a first end **8** connected to an upper portion of the stanchion **2** and a second end **9** connected to the boom **3**. The first and second ends **8** and **9** of the strut **3** are pivotally connected to the upper portion of the stanchion **2** and to the boom **3**, respectively.

[0030] Though it is not shown in detail, the distal end **3***a* of the boom **3** is adapted for connecting fastening means of an operator formed, for example, by a rope, cable or the like by means of a ring, hook, harness or the like.

[0031] FIG. **1** shows the fall protection device **1** in an equilibrium or basic working position, in which it is not subjected to any external stress caused by pulling the rope or cable to which the operator is fastened. In these conditions, the vertical stanchion **2** and the boom **3** form between them a right angle or an angle of about 90°.

[0032] FIGS. **2** and **3** show the strut **4** of the fall protection device **1** of FIG. **1** in the mentioned basic position in greater detail.

[0033] FIG. **2** shows that the strut **4** has a male unit **4***a* extending into an opening **13** formed at a female unit **4***b*, said units **4***a* and **4***b* cooperating and sliding with respect to each other at the level of the opening **13** when a compression force is transmitted to the second end **9** of the trust **4**. In the depicted embodiment, the male and the female units **4***b* and **4***a* of the trust **4** respectively consist of an inner and an outer concentric tubular sections **6** and **7** telescopically coupled and designed to slide into one another as will be explained below.

[0034] FIG. **4** illustrates the same fall protection device **1** when its is subjected to a stress, specifically when the distal end **3***a* of the boom **3** is subjected to a pulling stress in the direction indicated by the arrow as a consequence of an operator falling. FIG. **4** shows how the angle formed by the boom **3** with the vertical stanchion **2** became smaller in comparison with the angle formed between them in FIG. **1** and how in consequence the strut **4** has been retracted.

[0035] In a practical embodiment, the distance L**1** between the ends **8** and **9** of the strut **4** being approximately 2344 mm when the strut **4** adopts the position of FIG. **3**, this distance L**1** becomes approximately 1844 mm when the strut **4** is compressed and it adopts the position illustrated in FIG. **6**.

[0036] The sectioned views of the strut **4** of FIGS. **3** and **6** show that in a position close to the opening **13** of the female unit **4***b*, the strut **4** has been provided with a series of spherical elements **10** that will interact with the male unit **4***a* when the male and female units **4***a* and **4***b* slide with respect to each other, i.e., when they move from the position depicted in FIGS. **1** to **3** to the position depicted in FIGS. **4** to **6**.

[0037] These spherical elements **10** are located on the outer face of the female unit **4***b* but penetrate through corresponding drill holes **14** made on this female unit **4***b* into said female unit **4***b*.

[0038] FIG. **7** shows the features of this part of the strut **4** necessary for a correct operation of the fall protection device **1** in greater detail.

[0039] Each spherical element **10** is housed in a corresponding housing **11** and the dimensions of said elements **10** are such that they interfere with the outer profile of the male unit **4***a*, such that they will exert pressure and cause a successive plastic deformation of said male unit **4***a* during its movement relative to the female unit **4***b*.

[0040] In the example, the inner and the outer tubular sections **6**, **7** that form the male and female units **4***a* and **4***b* of the strut **4** are of non-alloy steel and have quadrangular cross sections with thickness 3 mm, and fit tightly to one another. Consequently d**1** being the distance separating two facing faces of the outer tubular section **7** and d**2** being the width of the inner tubular section **6**, therefore d**1**>d**2**.

[0041] The entire section of the portion **11** of the male unit **4***a* which has been introduced in the female unit **4***b* through its opening **13**, and which has passed through the spherical elements **10**, will be permanently deformed as illustrated in FIG. **7**.

[0042] FIG. **7** shows that there are four spherical elements **10**, each one facing a respective face of the inner tubular section **6** that forms the male unit **4***a* of the strut **4**, and that the minor portions **10***a* of each respective spherical element **10** that extend towards the interior of the outer tubular section **7** that forms the female unit **4***b* has deformed the sheet metal forming the facing face of the inner tubular section **6** forming the male unit **4***a,* causing an inward drawing or folding. The result is that as the male unit **4***a* is introduced in the female unit **4***b,* each spherical element **10** will form a prolonged sign or notch **12** in the male unit **4***a,* which will extend in the longitudinal direction of said male unit **4***a*.

[0043] Preferably, the drill holes **14** are truncated-cone hole shaped, comprising an internal opening facing the interior of the outer tubular section **7** and an external opening facing the associated housing **11**, the internal opening having a smaller cross section than the external opening.

[0044] Taking FIGS. **3** and **6** as references and bearing in mind that the male unit **4***a* is fitted in the corresponding female unit **4***b* through the opening **13** of the female unit **4***b,* the portion of the male unit **4***a* which is on the left of the spherical elements **10** will be marked, i.e., it would have deformed plastically due to these spherical elements **10** and will therefore be provided with a notch in correspondence with the profile of the spherical elements **10** on each of its faces. This plastic deformation will absorb part of the energy transmitted by the boom **3** to the vertical stanchion **2** when it suddenly goes from adopting the basic position of FIG. **1** to adopting the position of FIG. **4**. The portion of the male unit **4***a* which is on the right of the spherical elements **10** will keep its original shape of notch-free rectangular section in the metal sheet forming each of the four faces of the inner tubular section **6**, provided that it has never been introduced in the female unit **4***b* reaching the spherical elements **10**.

[0045] It must be noted that, in the basic position of the fall protection device **1**, a minor portion of the male unit **4***a* is already sufficiently introduced in the female unit **4***b* so that the spherical elements **10** have made a notch on the section of this minor portion which has passed through said spherical elements **10**. Advantageously, the same spherical elements **10** which will absorb the compression stress of the strut **4** if an operator falls prevent the accidental extraction of the male unit **4***a* from the female unit **4***b* during, for example, the handling of the fall protection device **1** during transport or storage and obviously also while it adopts the equilibrium or basic working position.

[0046] In one embodiment which has been shown to be optimal, the spherical elements are steel balls of **15** mm in diameter each penetrating between 1 and 2 mm into the tubular section that forms the female unit **4***a* of the strut **4**.

[0047] With the specific objective that the contraction of the strut **4** is immediate, it is essential that each spherical element **10** be enclosed in its housing **11**, over an associated drill hole **14**, with the capacity of rotation.

[0048] This capacity of rotation also plays a very important role in the distance which the male unit **4***b* will travel in the direction of insertion in the female unit **4***b*.

[0049] The tests carried out with static means plastically deforming the male unit **4***a* during its insertion in the female unit **4***b* were not satisfactory in this sense, despite the fact that the tests were performed in different ways. Elements integrally attached to the female unit **4***b* which, by way of claws penetrated therein for making a notch on the male unit **4***a* during its insertion in said female unit **4***b* were used in such tests. Distances of insertion close to **40** cm were in no case achieved when the fall protection device was subjected to a stress simulating the fall of an operator. In addition, it was also highlighted that it was necessary to overcome the threshold of static friction coefficient between the parts subjected to friction so that the retraction of the strut **4** was initiated. Such circumstances discouraged the skilled person from his/her continuous search for a definitive solution based on making a notch on the inner tubular section **6** forming the male unit **4***a* of the strut **4** for absorbing or attenuating the tug produced during the fall of the operator.

[0050] Although in the example the housings **11** for the spherical elements **10** consist of respective concave and originally separated parts firmly coupled to the exterior surface of the outer tubular section that forms the female unit **4***b,* each dimensioned to accommodate a respective spherical element **10**, an alternative embodiment consisting of arranging a part in a ring shape and provided with four entrances, in correspondence with the four spherical elements **10**, for partially housing and retaining each spherical element **10** in the position illustrated in FIG. **7** is contemplated.

[0051] As described above, the contact surface offered by each housing **11** for supporting a corresponding spherical element **10** must be suitable to allow the rotation of the spherical elements **10** during the operation of making a notch on the inner tubular section **6** forming the male unit **4***a*. Concave shapes in the form of spherical cap with a diameter similar to that of the spherical elements **10** must be avoided since they could block the rotation of these elements which would in turn lead to an unsuitable operation of the fall protection device **1**.

1. A fall protection device comprising a frame including a vertical stanchion rotatably mounted in a support casing, a boom connected to a top portion of the vertical stanchion, and a strut having a first end connected to an upper portion of the stanchion and a second end connected to the boom in order to cushion the pivotal movement of the boom towards the stanchion caused by a downward traction force occasionally applied at a distal end of the boom, wherein the strut has a male unit extending into an opening formed at a female unit, said units cooperating and sliding with respect to each other at the level of the opening when a compression force is transmitted to the second end of the trust, and wherein the female unit is provide with housings for respective cylindrical or spherical elements that roll or rotate by friction with the male unit when the male and female units slide with respect to each other, the dimensions of said elements being such that they interfere with the outer profile of the male unit, pressing and causing the successive plastic deformation of the male unit during its movement relative to the female unit.

2. A fall protection device according to claim **1**, wherein the male and the female units of the trust respectively consist of an inner and an outer concentric tubular sections designed to slide into one another.

3. A fall protection device according to claim **2**, wherein the inner and the outer tubular sections have essentially quadrangular cross sections, and wherein the cylindrical or spherical elements are four, each one facing a respective face of the inner tubular section.

4. A fall protection device according to claim **2**, wherein the outer tubular section has drill holes through which a minor portion of respective spherical elements extends towards the interior of the outer tubular section to contact the inner tubular

section, each spherical element being enclosed, over an associated drill hole and with the capacity of rotation, within a housing.

5. A fall protection device according to claim **4**, wherein the housings for the spherical elements consist of respective concave and originally separated parts firmly coupled to the exterior surface of the outer tubular section and dimensioned to accommodate the respective spherical element.

6. A fall protection device according to claim **4**, wherein the drill holes are truncated-cone hole shaped, comprising an internal opening facing the interior of the outer tubular section and an external opening facing the housing, the internal opening having a smaller cross section than the external opening.

7. A fall protection device according to claim **1**, wherein the boom is pivotally connected to the top portion of the vertical stanchion.

8. A fall protection device according to claim **6**, wherein the first and second ends of the strut are pivotally connected to the upper portion of the stanchion and to the boom, respectively.

* * * * *