US 20110068145A1

(19) **United States**

(12) **Patent Application Publication**

**Bedi et al.**

(10) **Pub. No.: US 2011/0068145 A1**

(43) **Pub. Date: Mar. 24, 2011**

(54) **SURGICAL STAPLING INSTRUMENT WITH IMPROVED FIRING TRIGGER ARRANGEMENT**

(75) Inventors: **James J. Bedi**, Cincinnati, OH (US); **Chester O. Baxter, III**, Loveland, OH (US)

(73) Assignee: **Ethicon Endo-Surgery, Inc.**, Cincinnati, OH (US)

(21) Appl. No.: **12/855,351**

(22) Filed: **Aug. 12, 2010**

**Related U.S. Application Data**

(63) Continuation-in-part of application No. 12/725,993, filed on Mar. 17, 2010, which is a continuation-in-part of application No. 12/234,149, filed on Sep. 19, 2008, Continuation-in-part of application No. 12/622,099, filed on Nov. 19, 2009, Continuation-in-part of application No. 12/843,436, filed on Jul. 26, 2010, which is a continuation of application No. 12/030,424, filed on Feb. 13, 2008, now Pat. No. 7,766,209.

(60) Provisional application No. 61/250,377, filed on Oct. 9, 2009.

**Publication Classification**

(51) **Int. Cl.**
*A61B 17/068* (2006.01)

(52) **U.S. Cl.** ..... **227/176.1**

(57) **ABSTRACT**

A surgical stapling instrument including an actuator knob which can be moved from one side of the stapling instrument to another side in order to reposition the actuator knob without having to reposition the stapling instrument within a surgical site. A stapling instrument can include a pusher bar, a housing having a first side and a second side, and an actuator knob rotatably mounted to the pusher bar wherein the actuator knob can be configured to be rotated between a first position in which the actuator knob can be moved along the first side of the housing and a second position where the actuator knob can be moved along a second side of the housing. Alternatively, a surgical stapling instrument can comprise one or more actuator knobs which can be operably engaged and disengaged with a pusher bar in order to selectively utilize the actuator knobs.

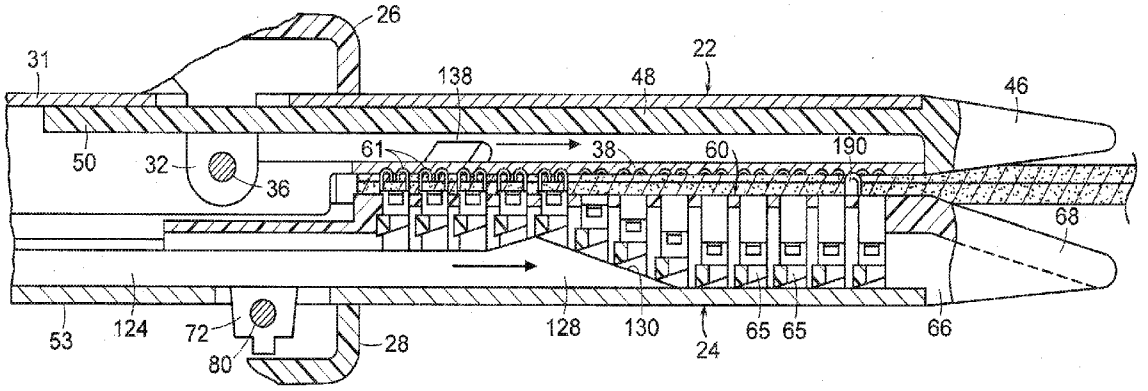

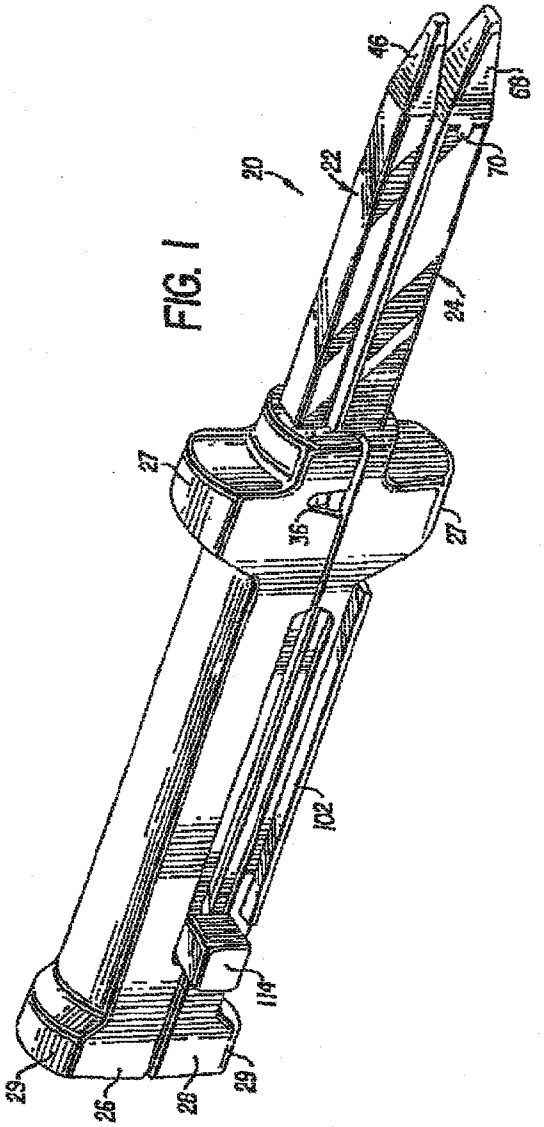
20
22
46
68
70
24
27
36
27
102
114
29
26
28
29

FIG. 1

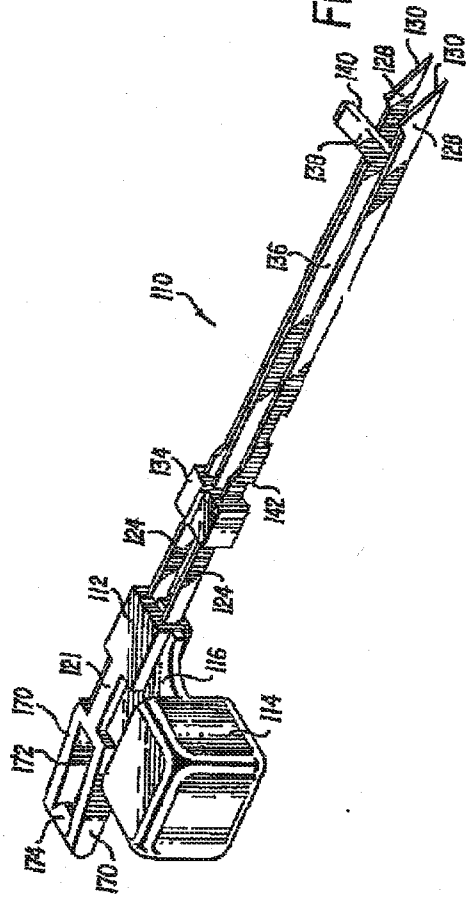
110
136
140
128
130
130
128
134
142
124
124
112
121
116
114
170
172
174
170

FIG. 10

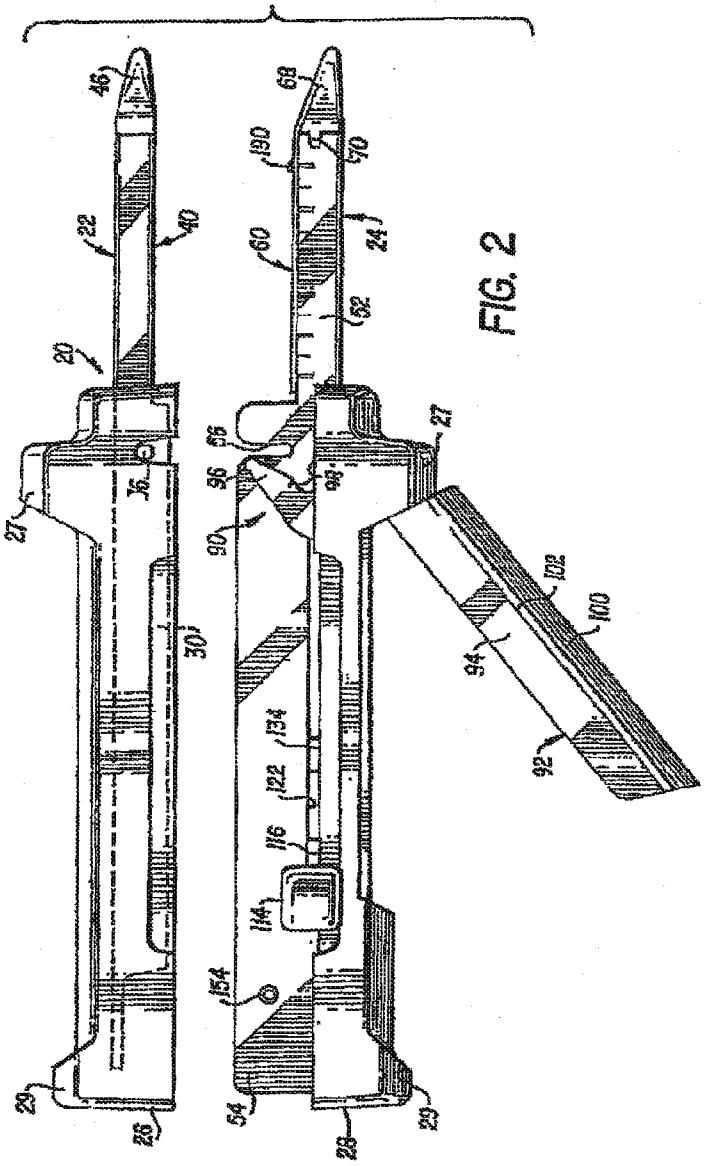
46
22
40
20
27
16
30
29
26
68
130
70
60
24
62
66
96
90
27
102
100
94
92
134
122
116
114
154
54
28
29

FIG. 2

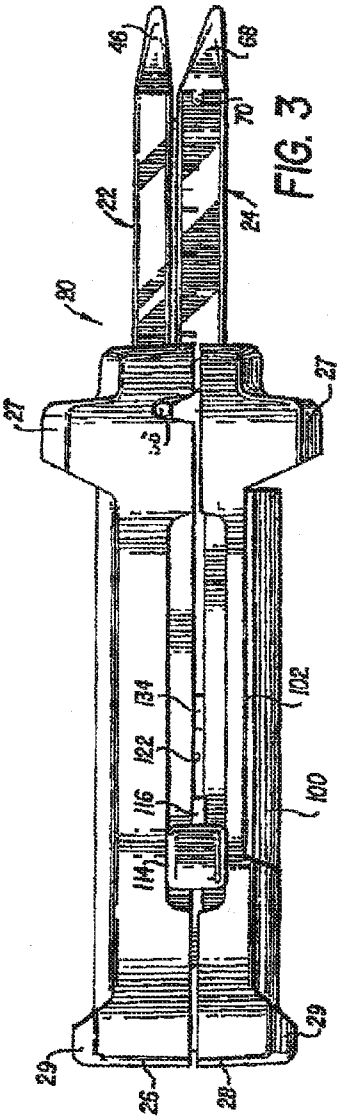
46
68
70
22
24
80
27
27
102
134
122
116
100
114
29
29
26
28

FIG. 3

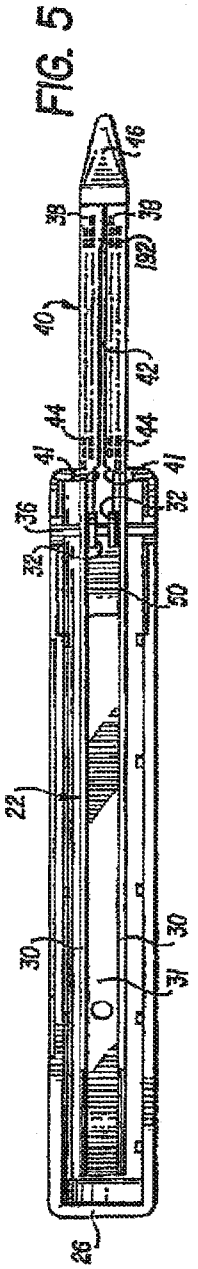

FIG. 5

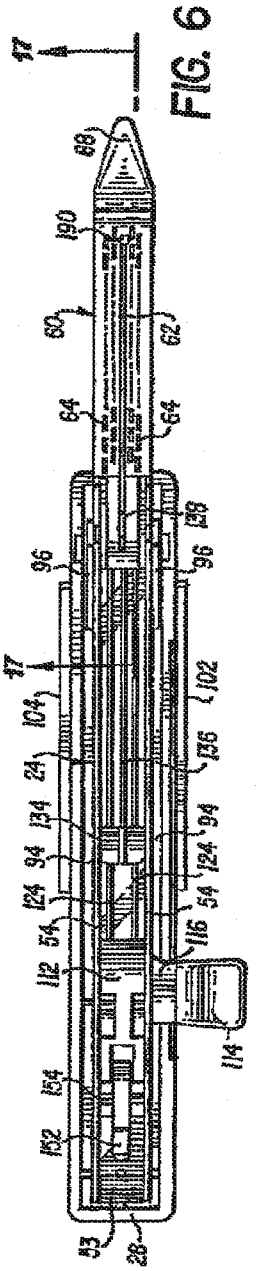

FIG. 6

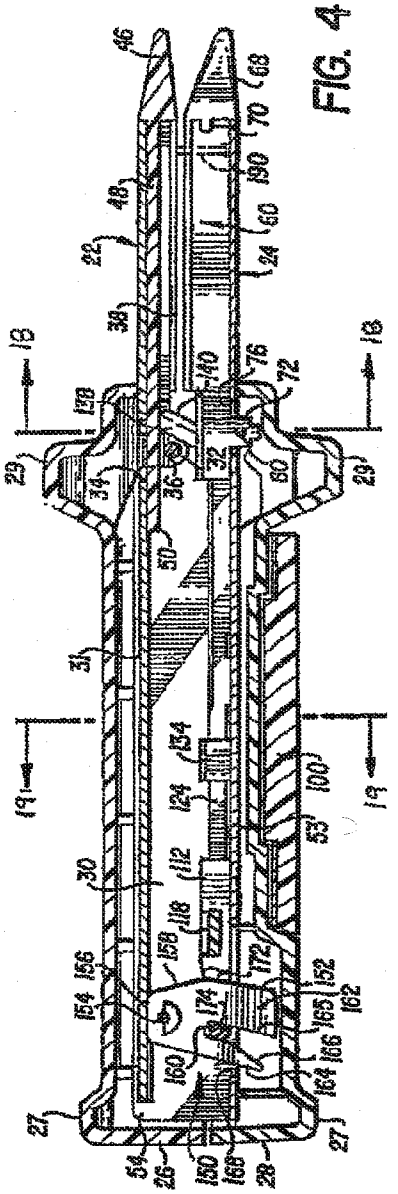

FIG. 4

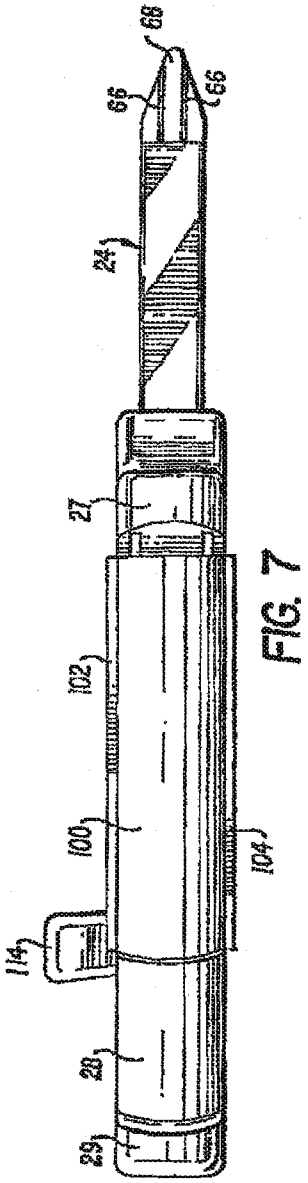


FIG. 7

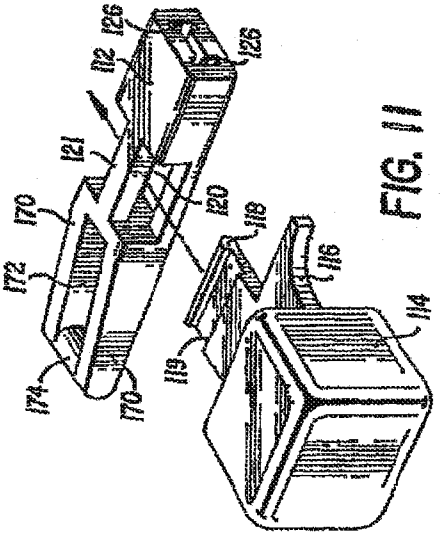


FIG. 11

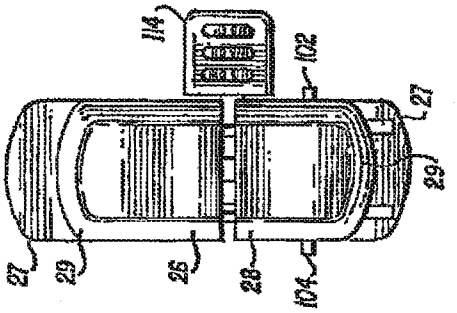


FIG. 9

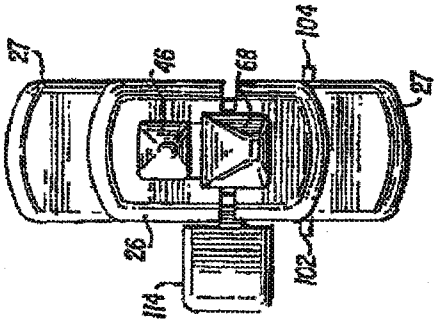


FIG. 8

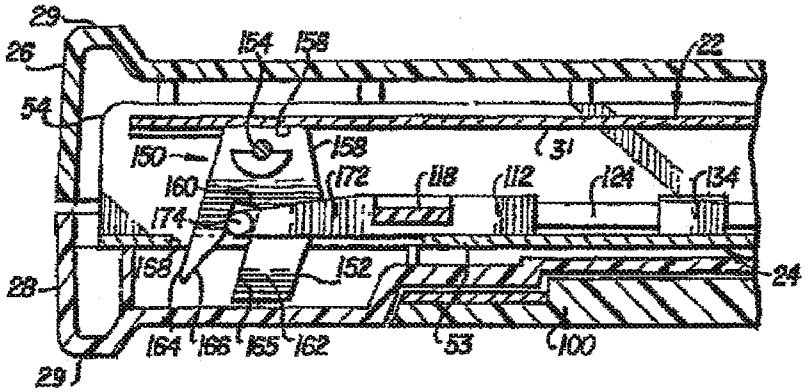


FIG. 12

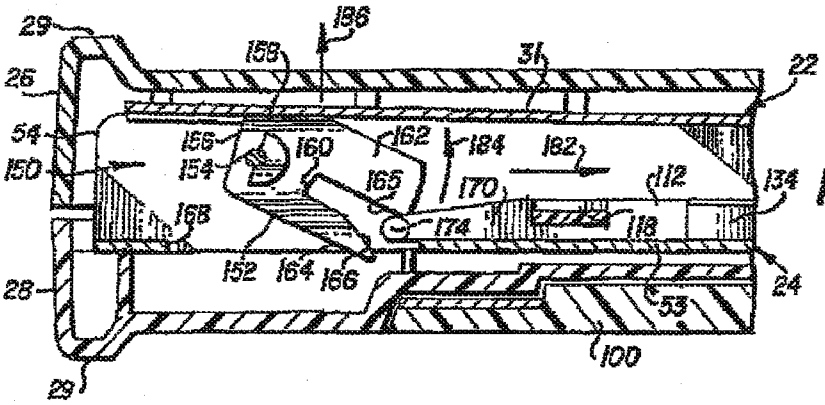


FIG. 13

FIG. 14

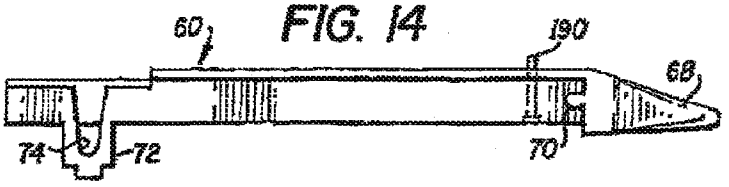


FIG. 15

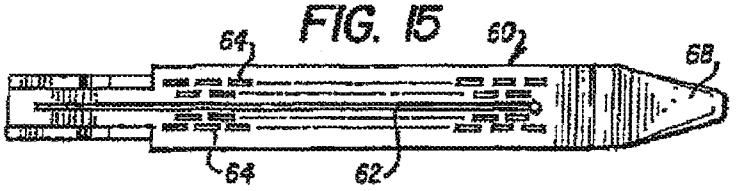


FIG. 16

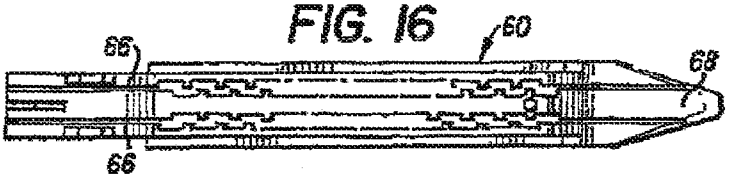

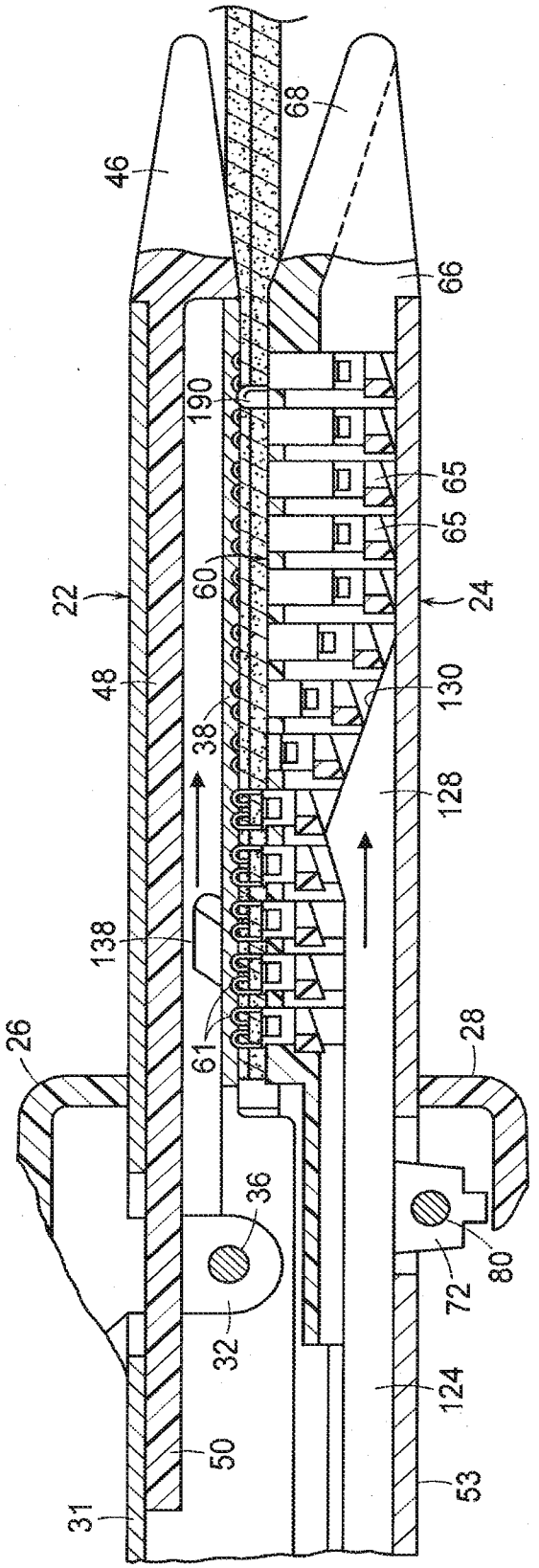
68
46
66
190
65
65
60
22
24
48
130
38
128
138
61
26
28
36
80
72
32
124
50
53
31

FIG. 17

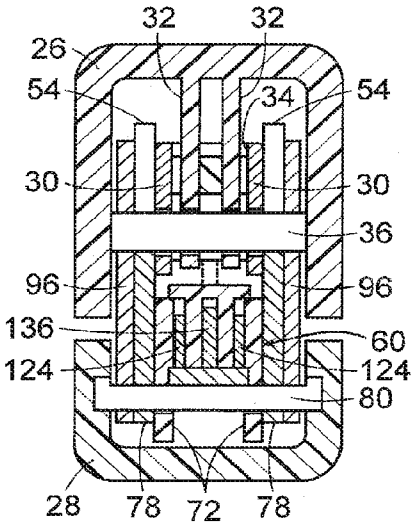


FIG. 18

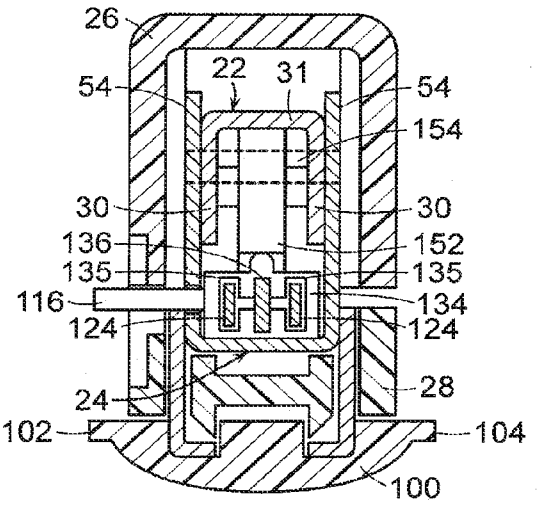


FIG. 19

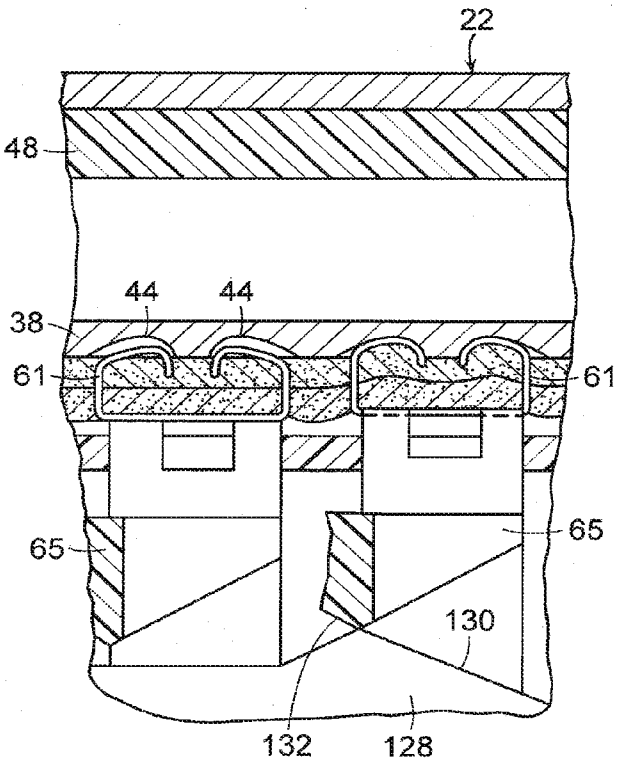


FIG. 20

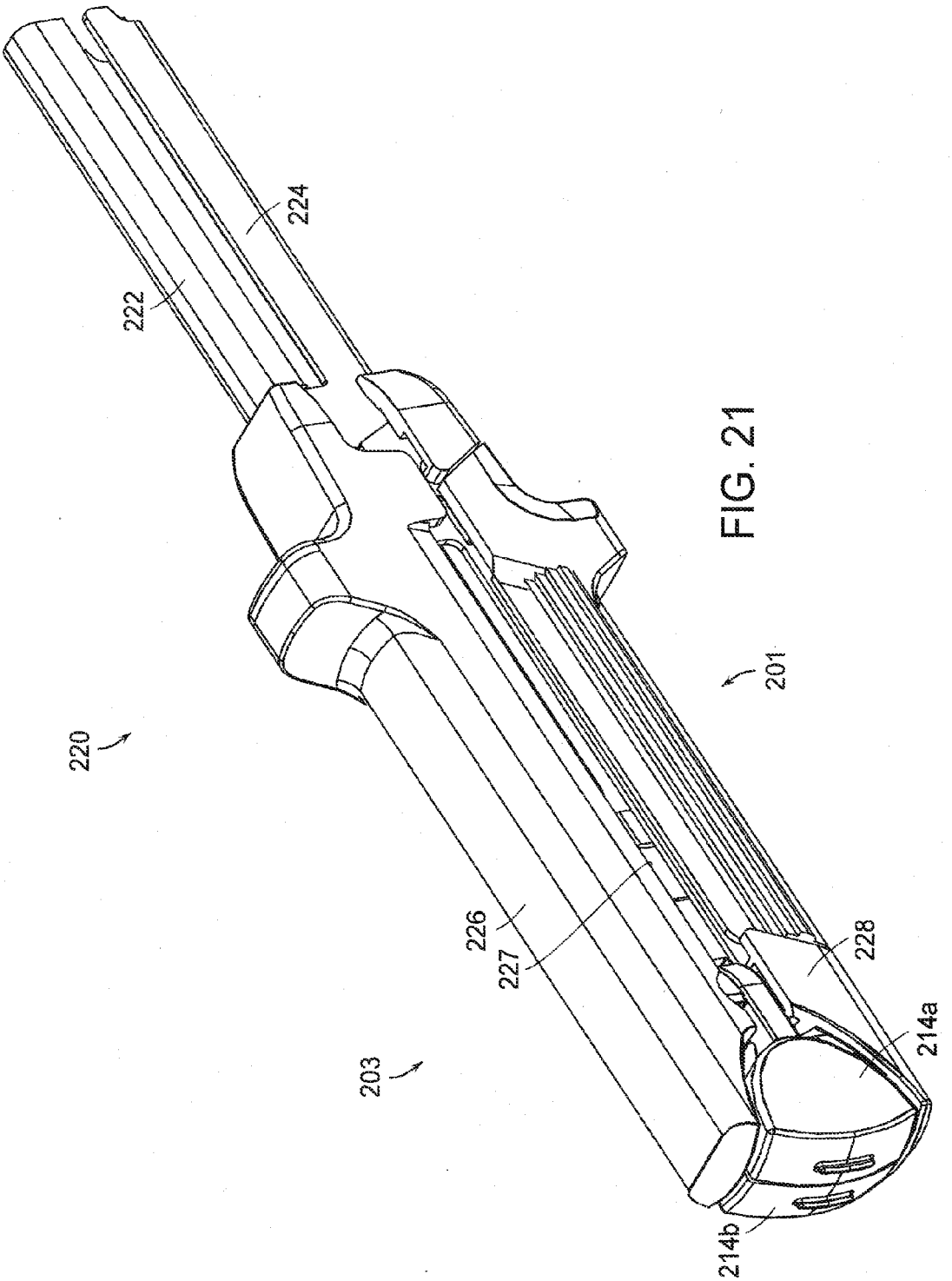


FIG. 21

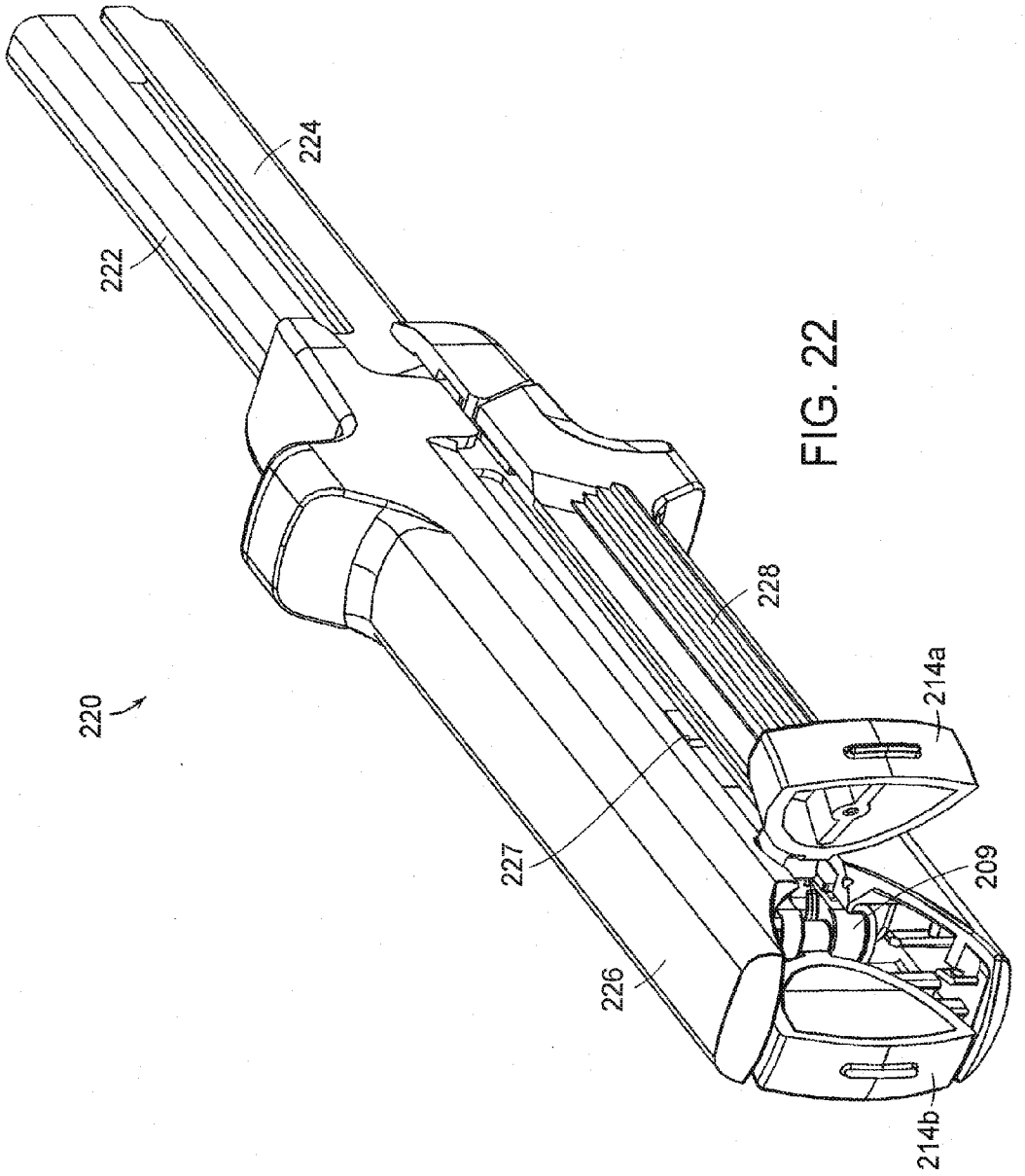


FIG. 22

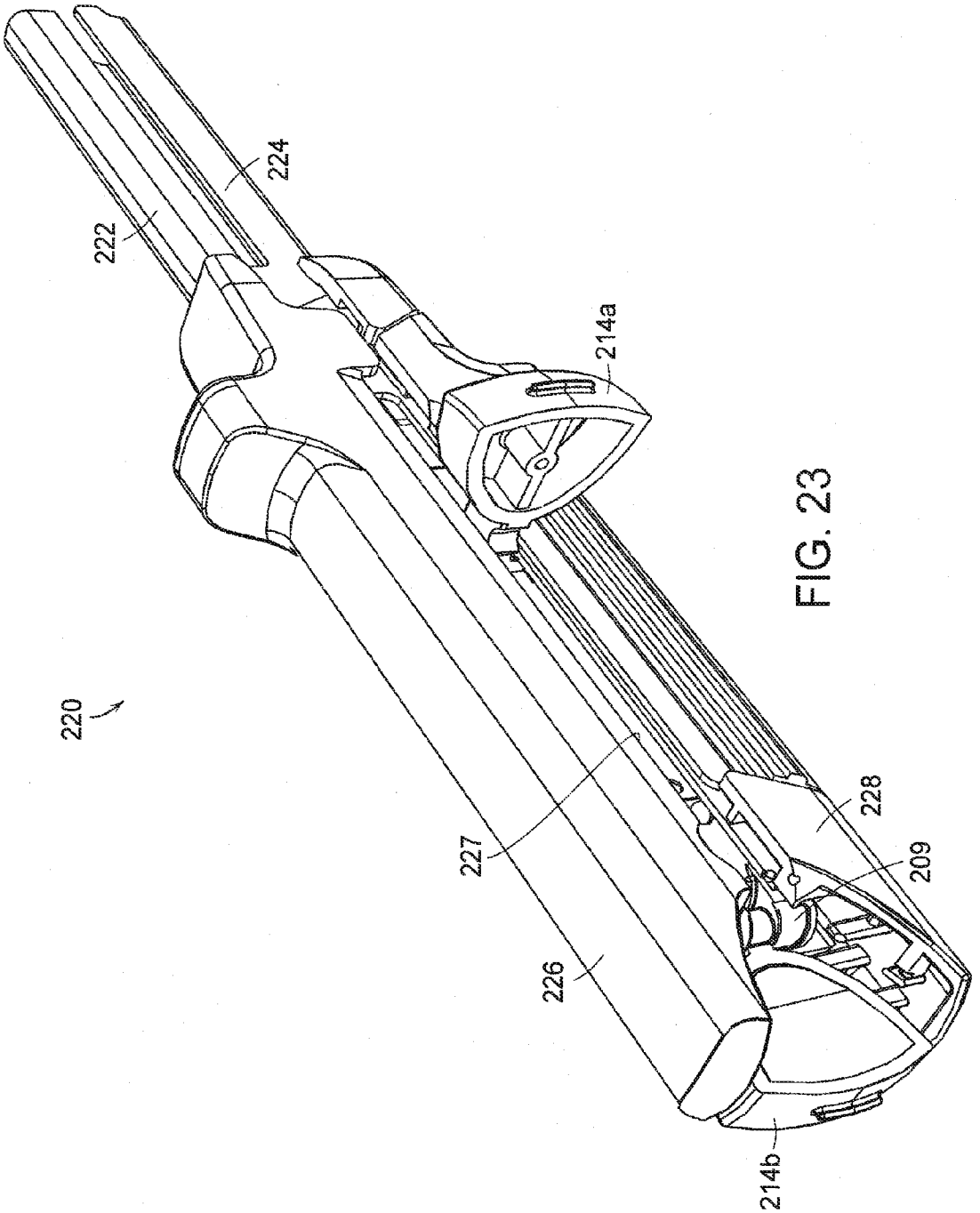


FIG. 23

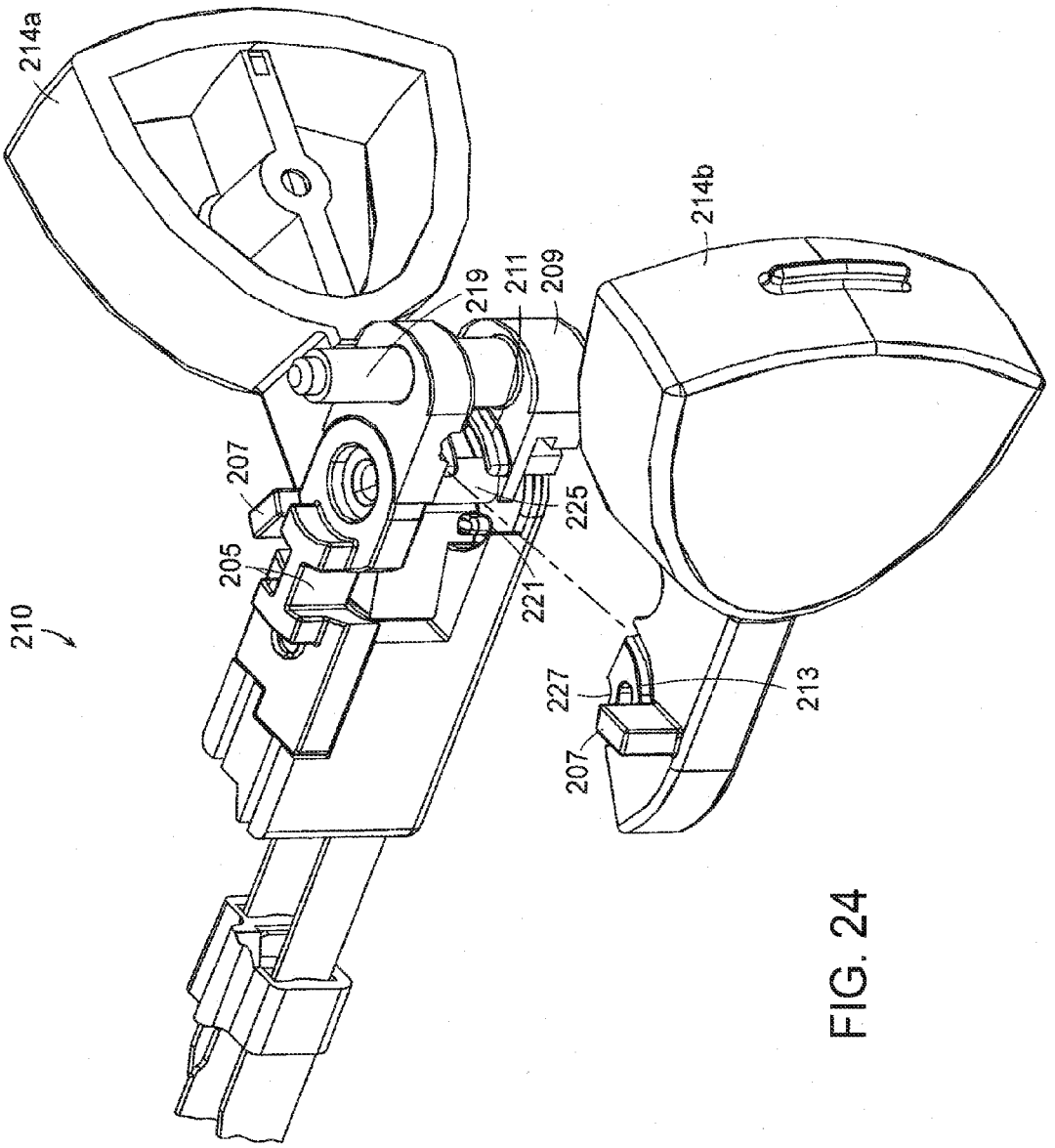


FIG. 24

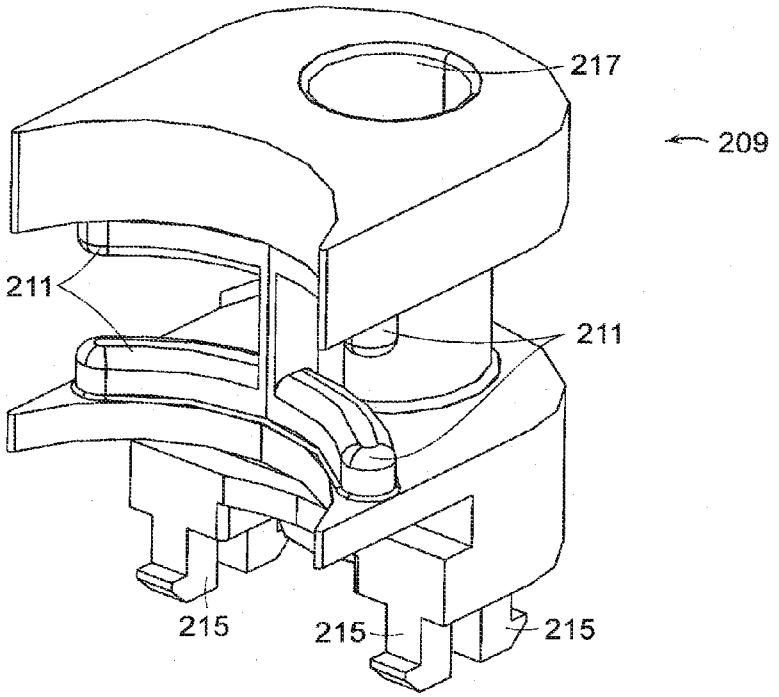


FIG. 25

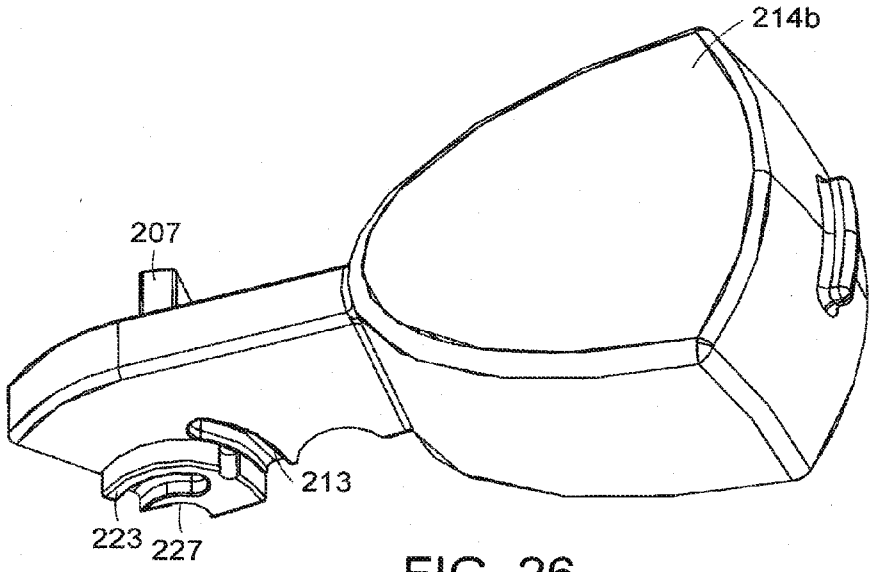


FIG. 26

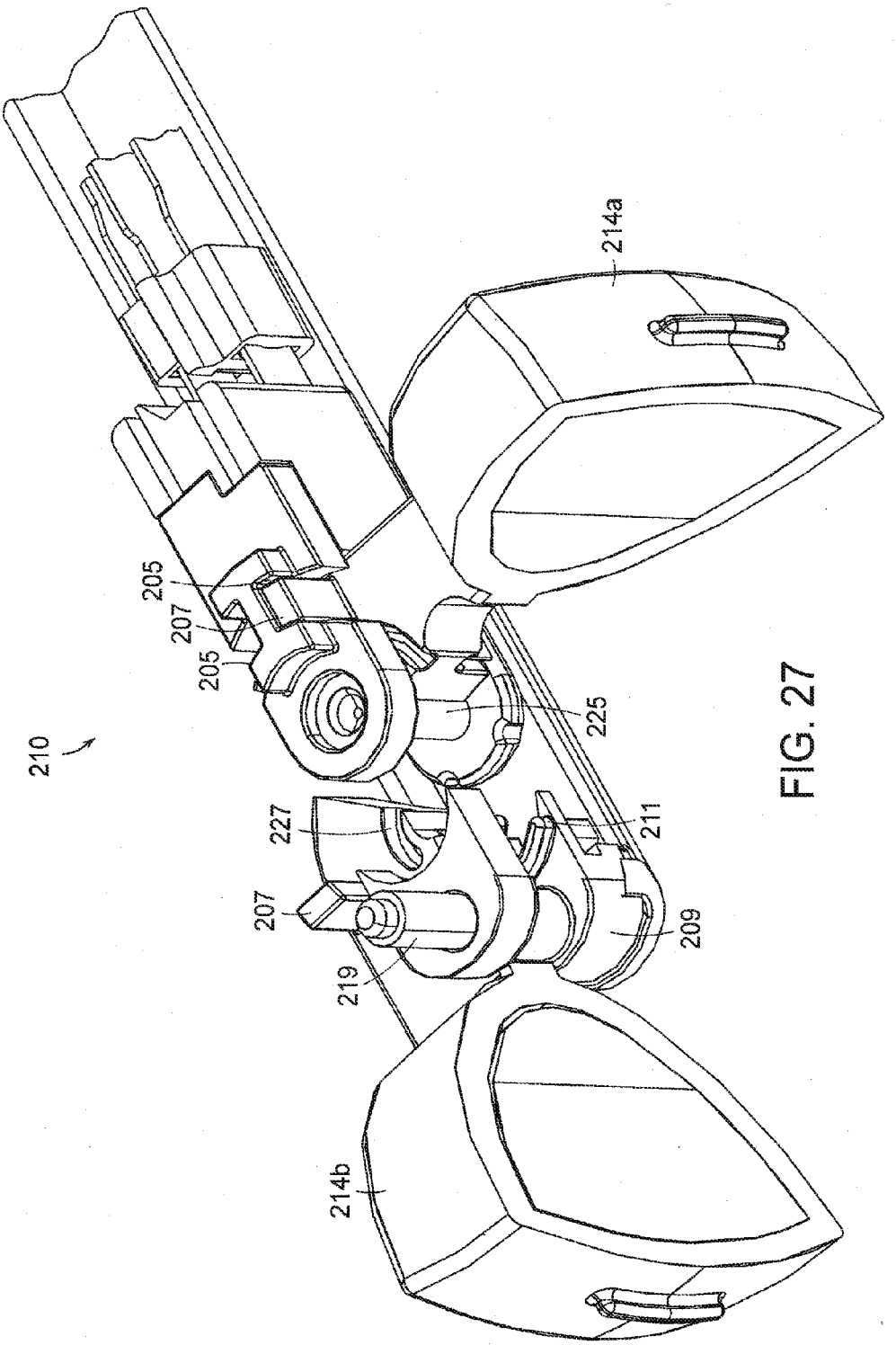


FIG. 27

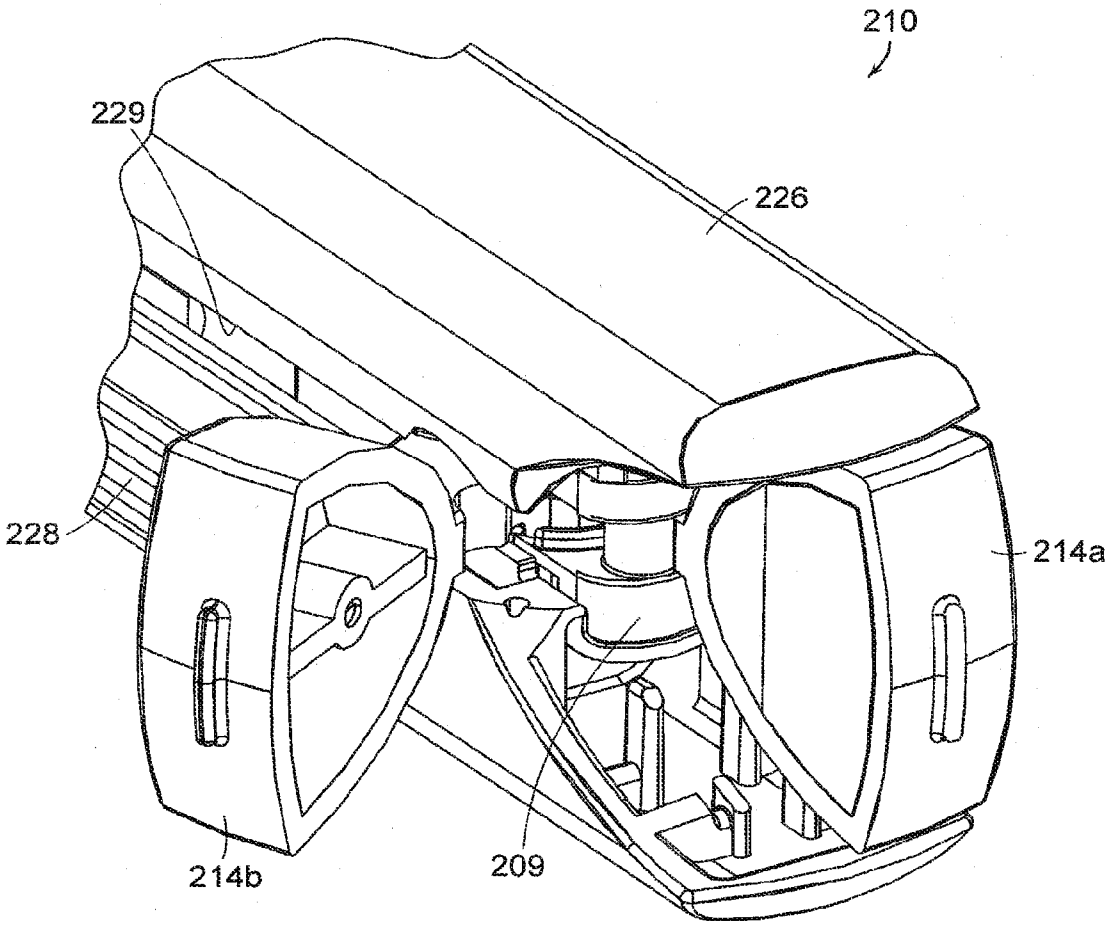


FIG. 28

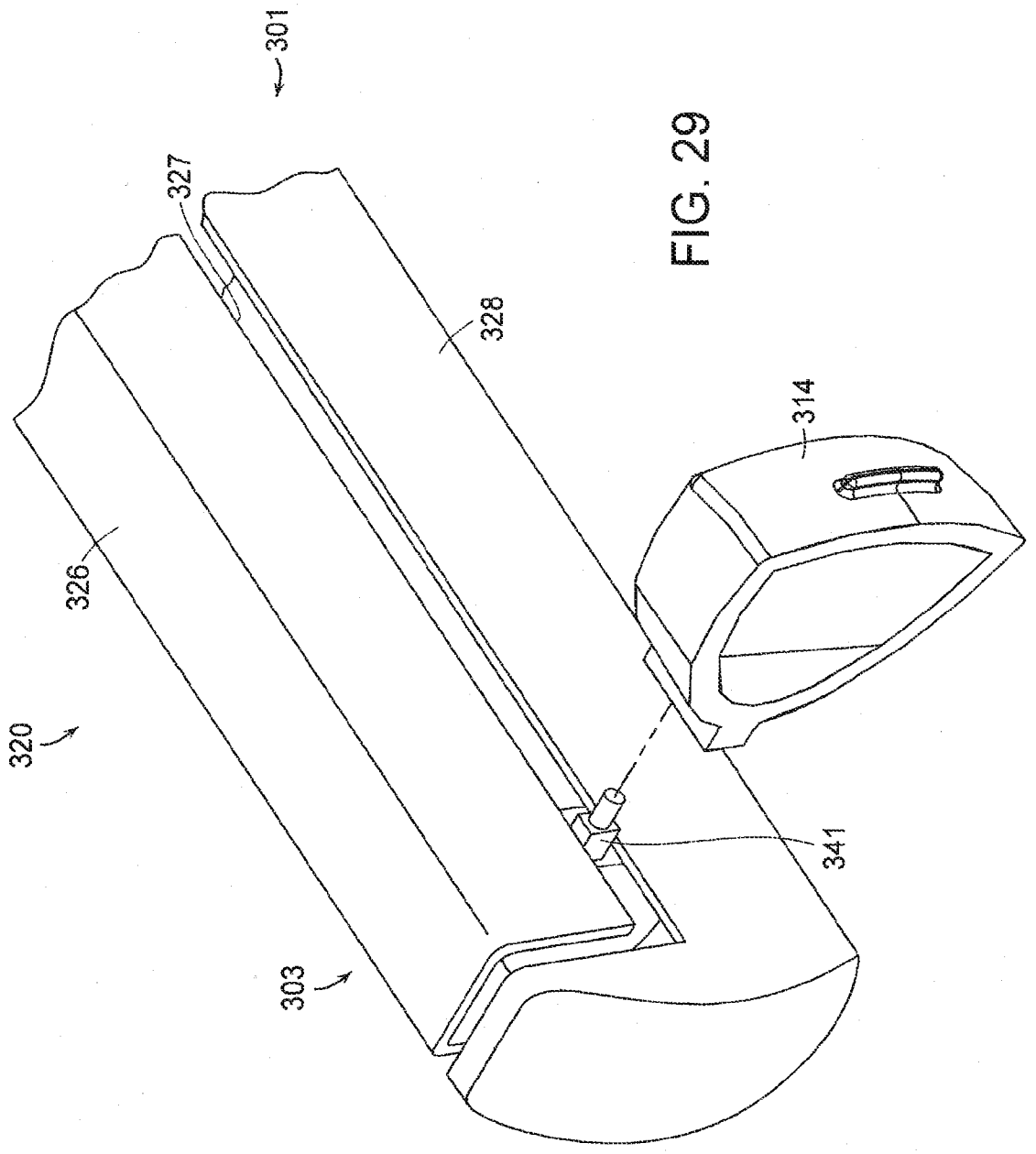


FIG. 29

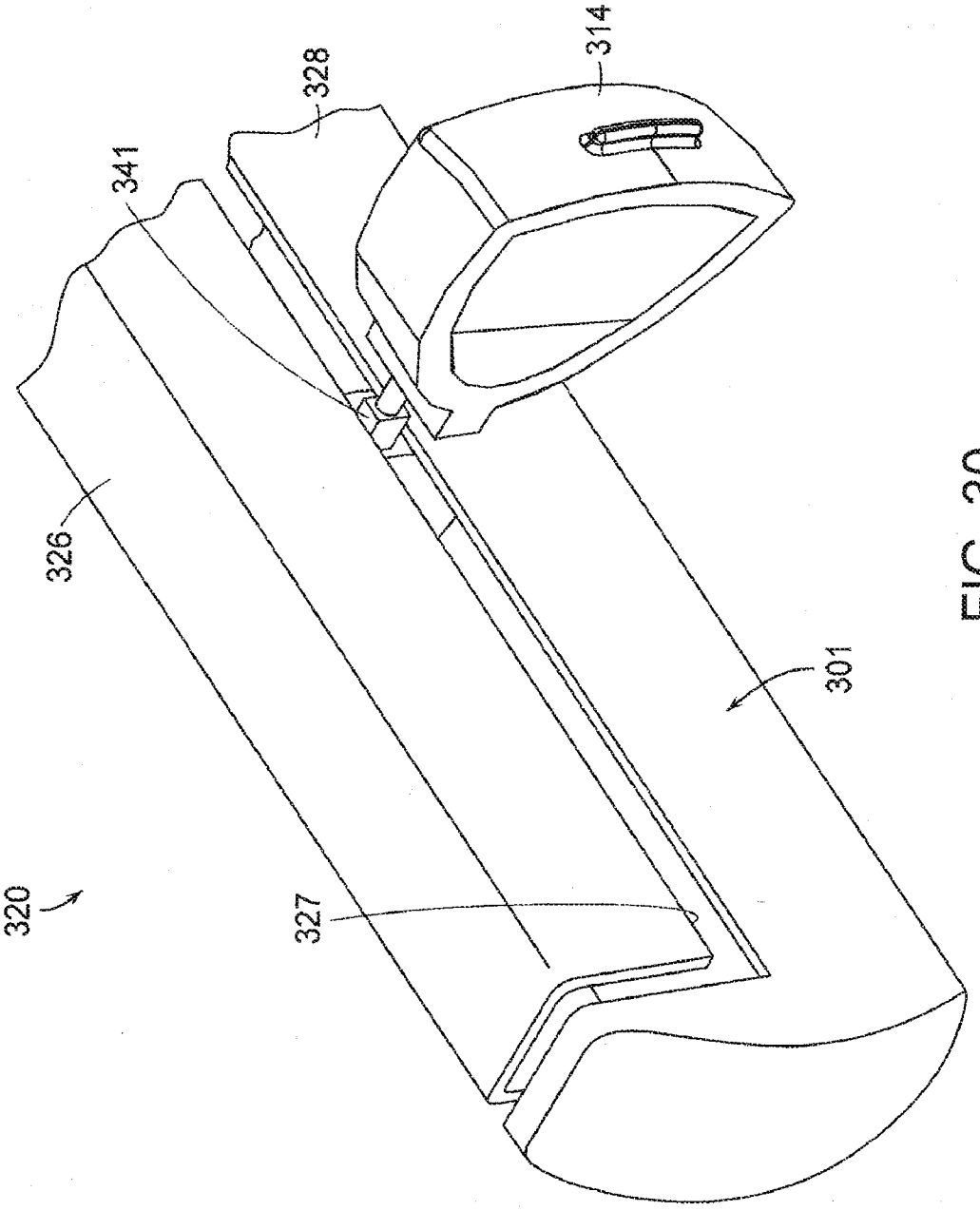


FIG. 30

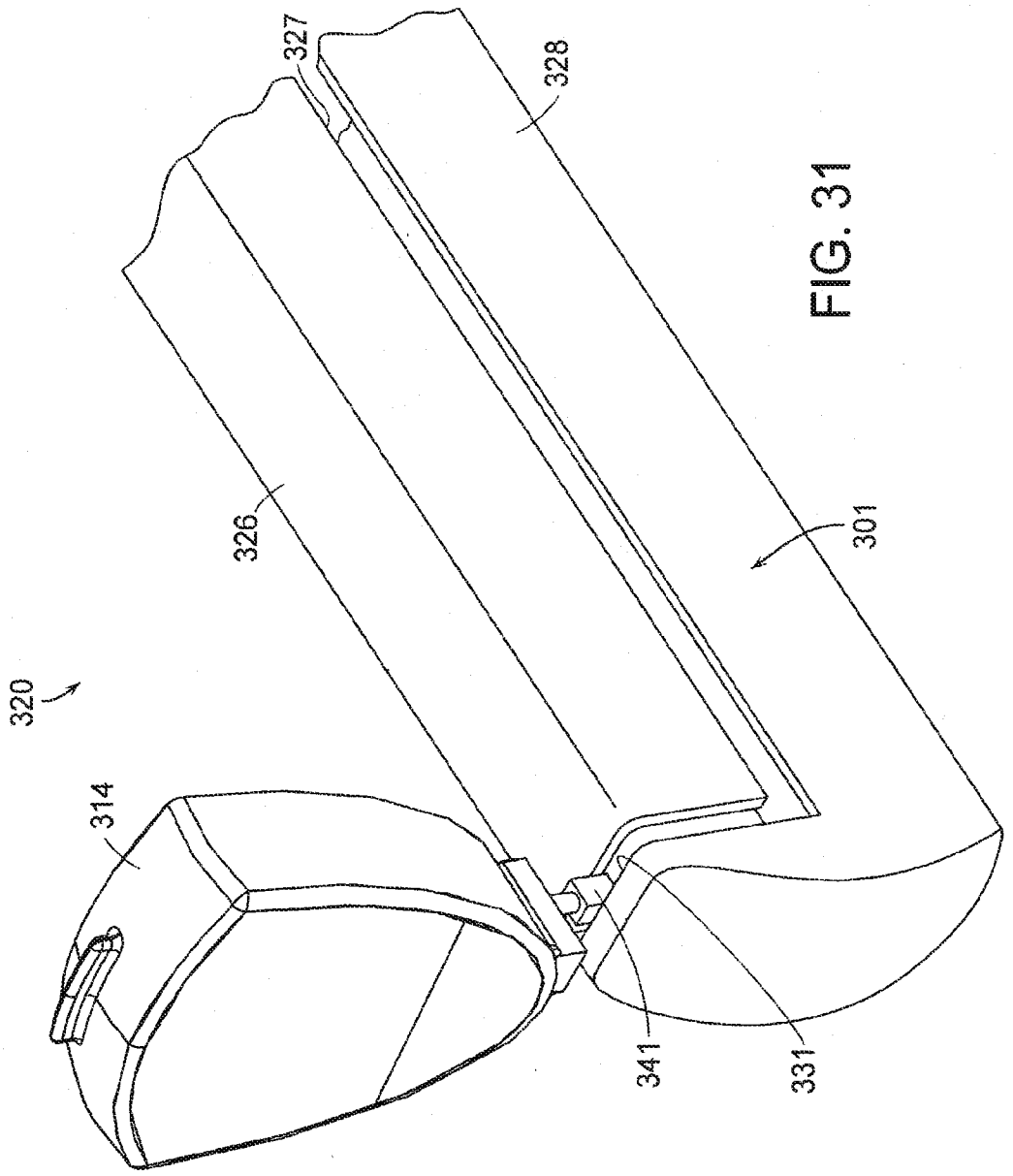


FIG. 31

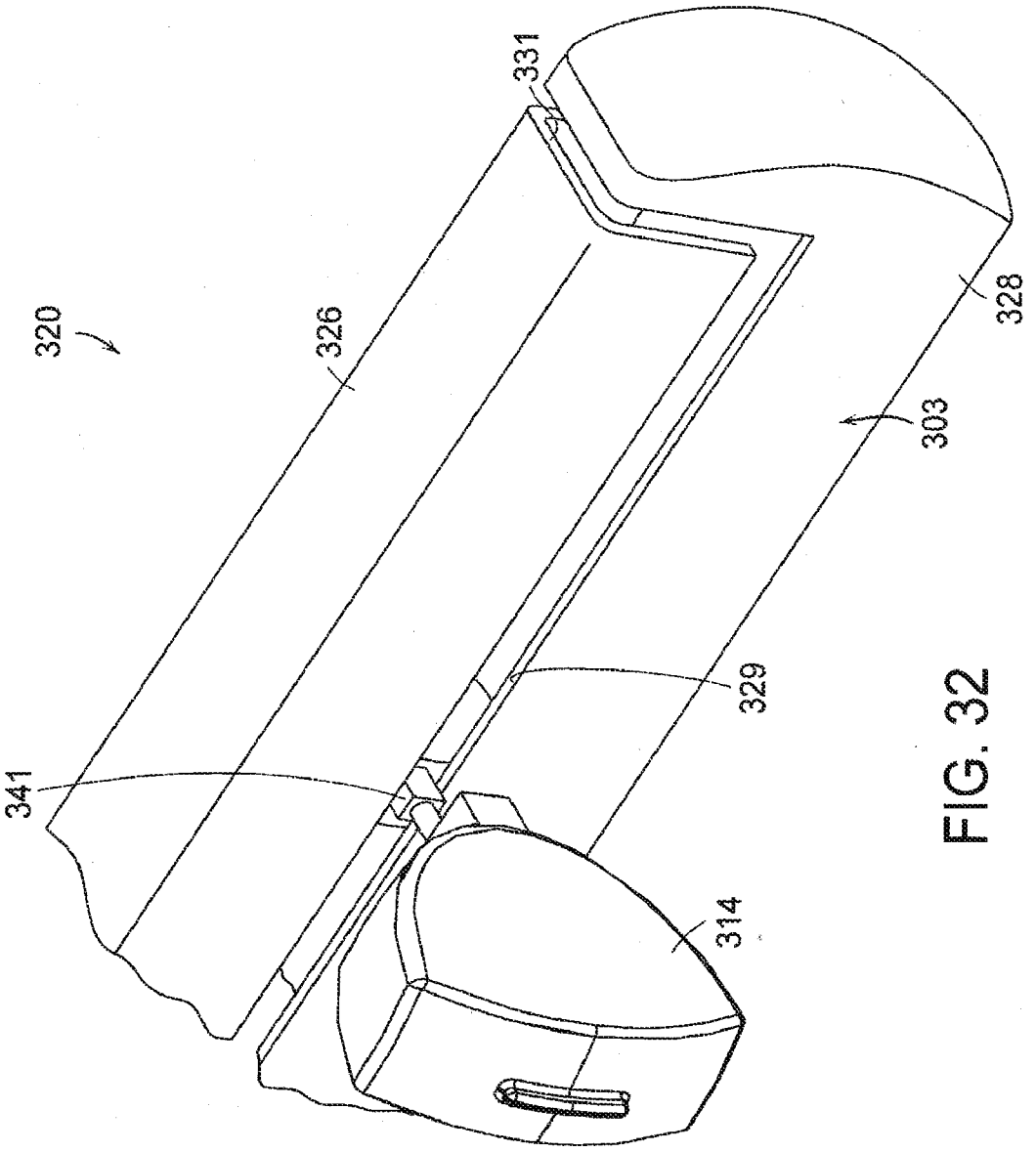


FIG. 32

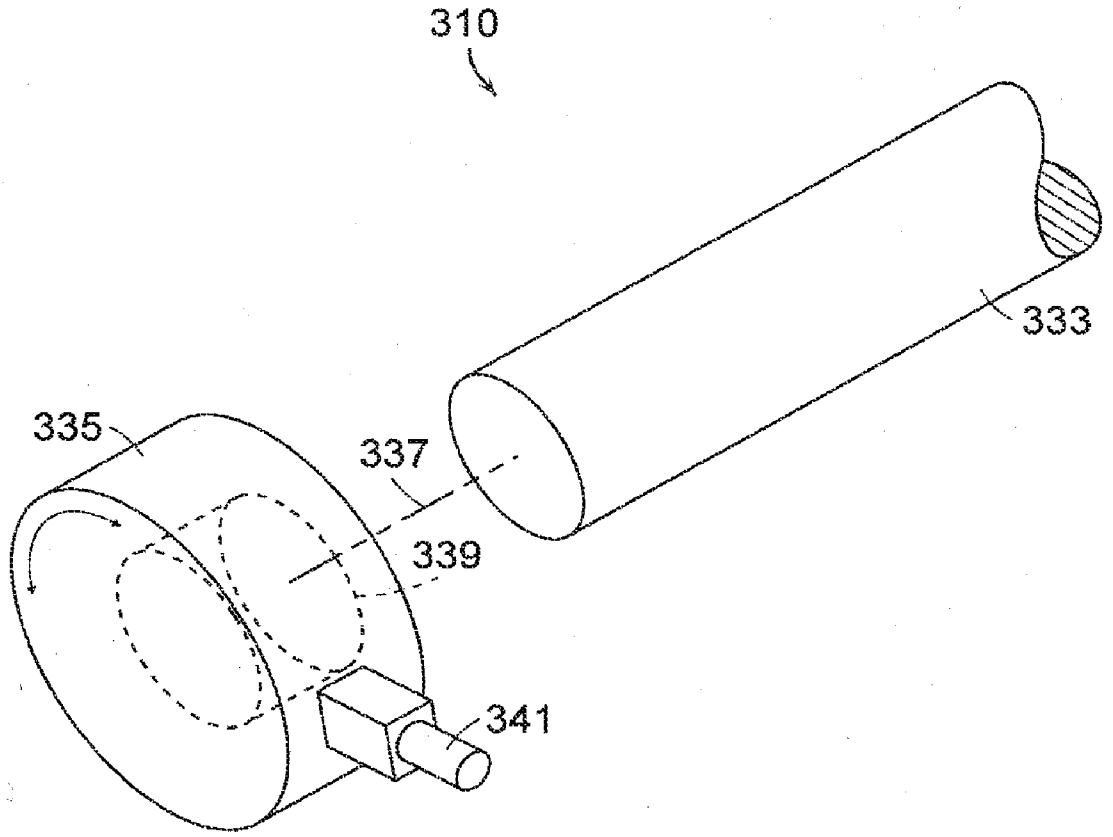


FIG. 33

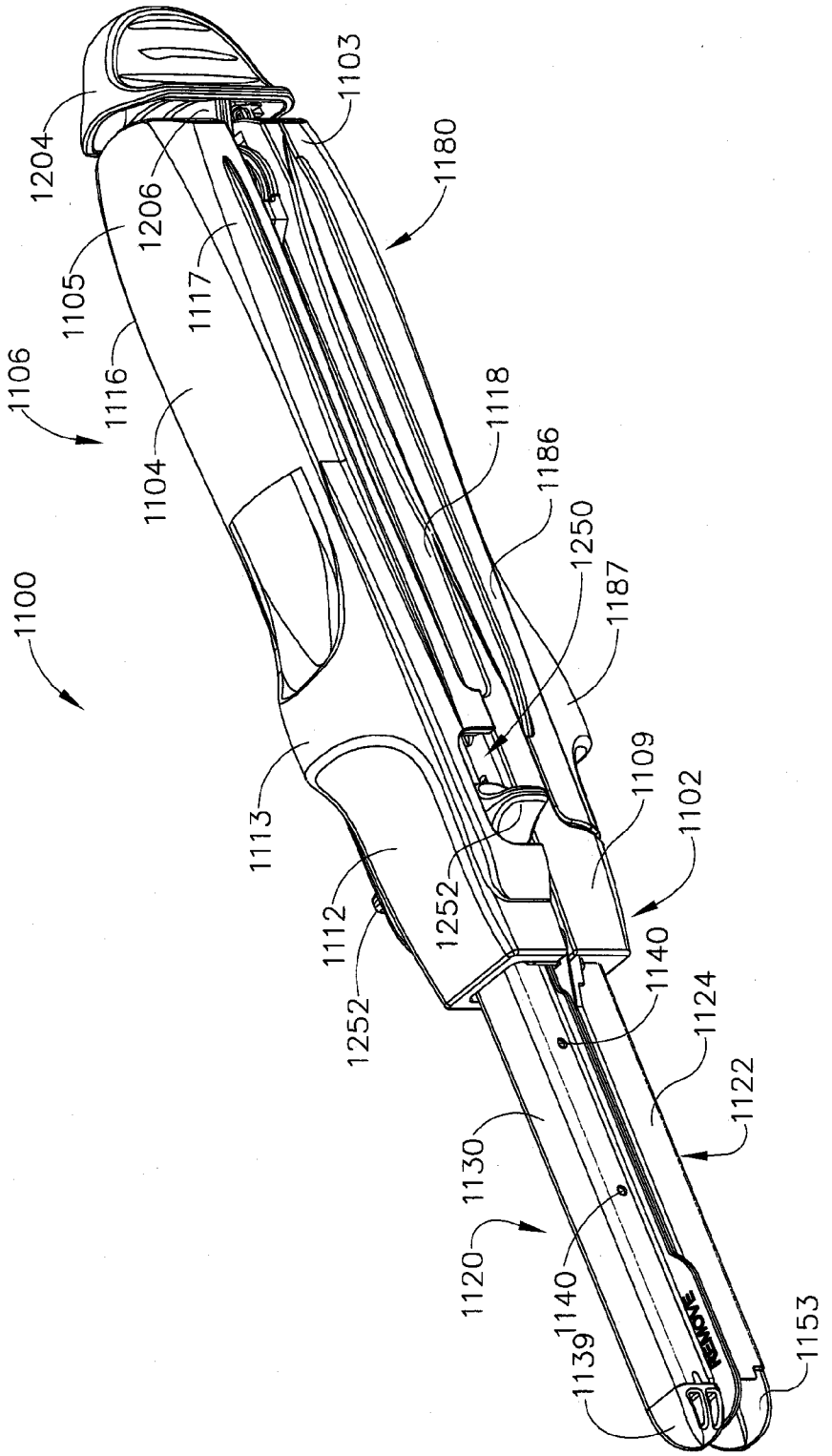
1204
1206
1103
1180
1105
1117
1106
1116
1104
1118
1186
1250
1187
1100
1109
1102
1113
1112
1252
1252
1140
1124
1122
1130
1120
1140
1139
1153
REMOVE

FIG. 34

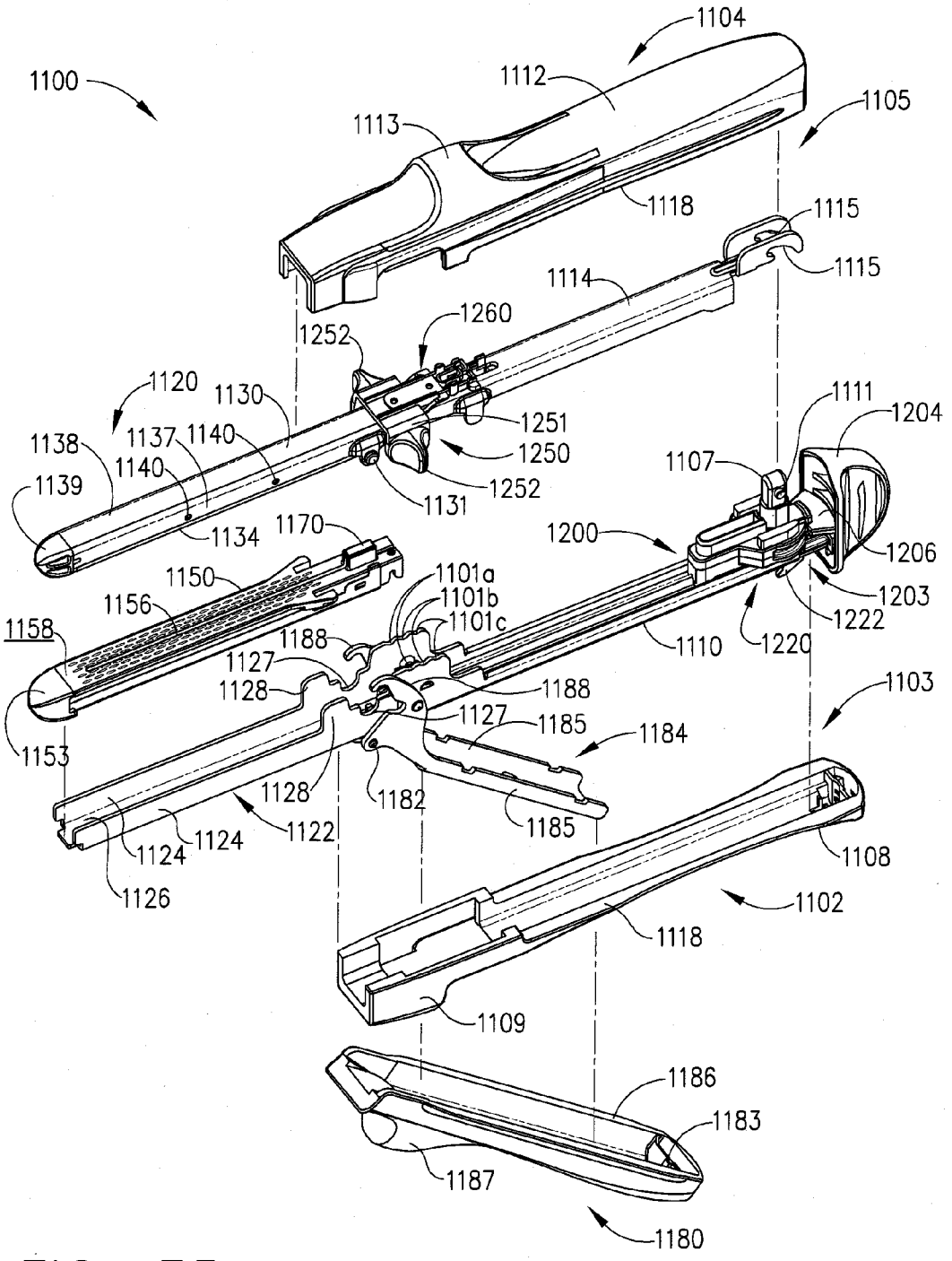
1100
1104
1112
1105
1113
1118
1115
1115
1114
1260
1252
1120
1130
1251
1250
1252
1131
1138
1137
1140
1140
1139
1134
1170
1111
1204
1107
1200
1206
1203
1222
1220
1150
1156
1158
1101a
1101b
1101c
1188
1127
1128
1110
1188
1127
1185
1184
1103
1153
1128
1182
1122
1185
1124
1124
1126
1108
1102
1118
1109
1186
1183
1187
1180

FIG. 35

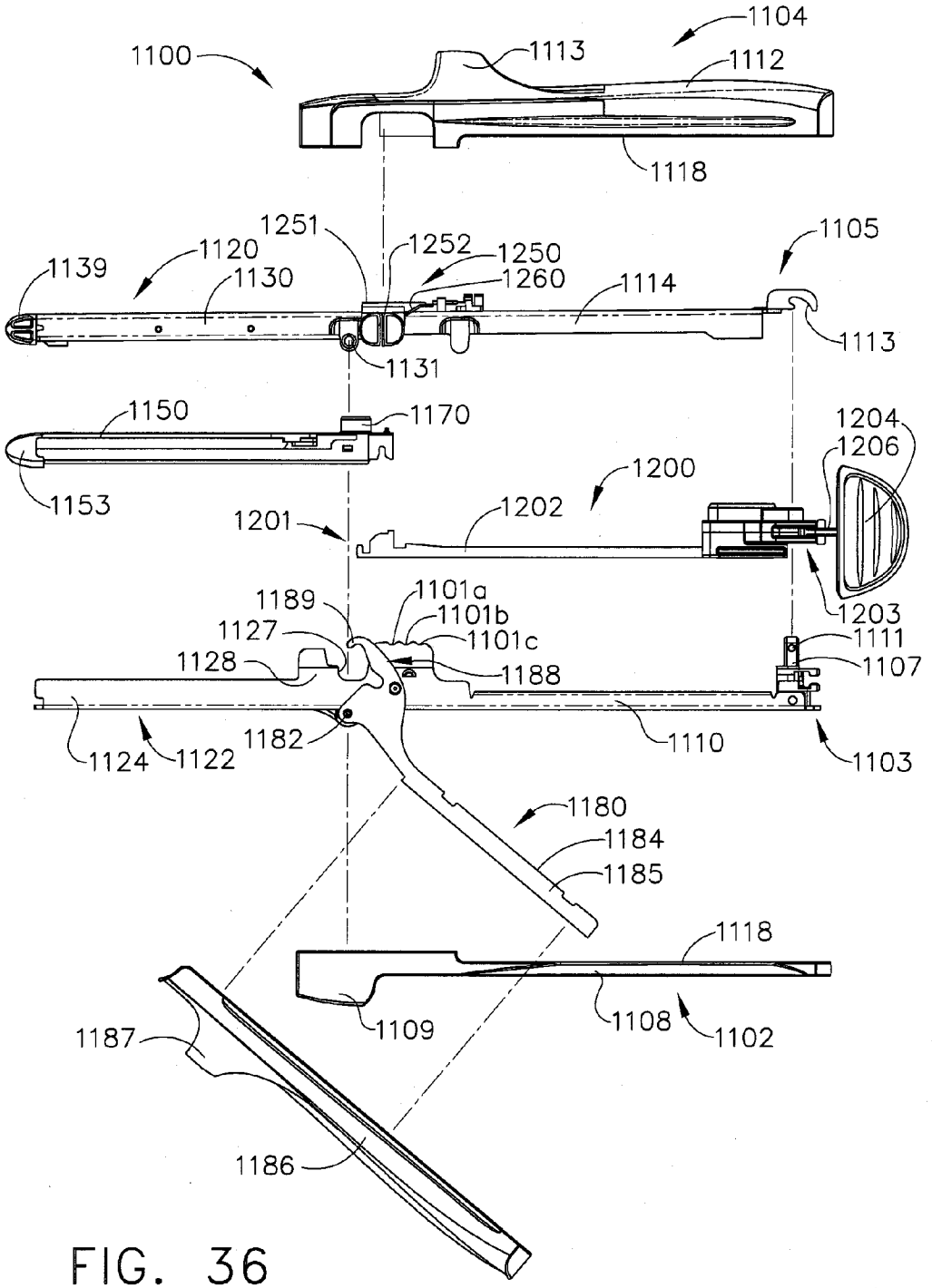
1104
1100
1113
1112
1118
1251
1252
1250
1260
1105
1120
1139
1130
1114
1113
1131
1150
1170
1204
1206
1200
1153
1201
1202
1203
1189
1101a
1101b
1127
1101c
1111
1128
1188
1107
1124
1122
1182
1110
1103
1180
1184
1185
1118
1109
1108
1102
1187
1186

FIG. 36

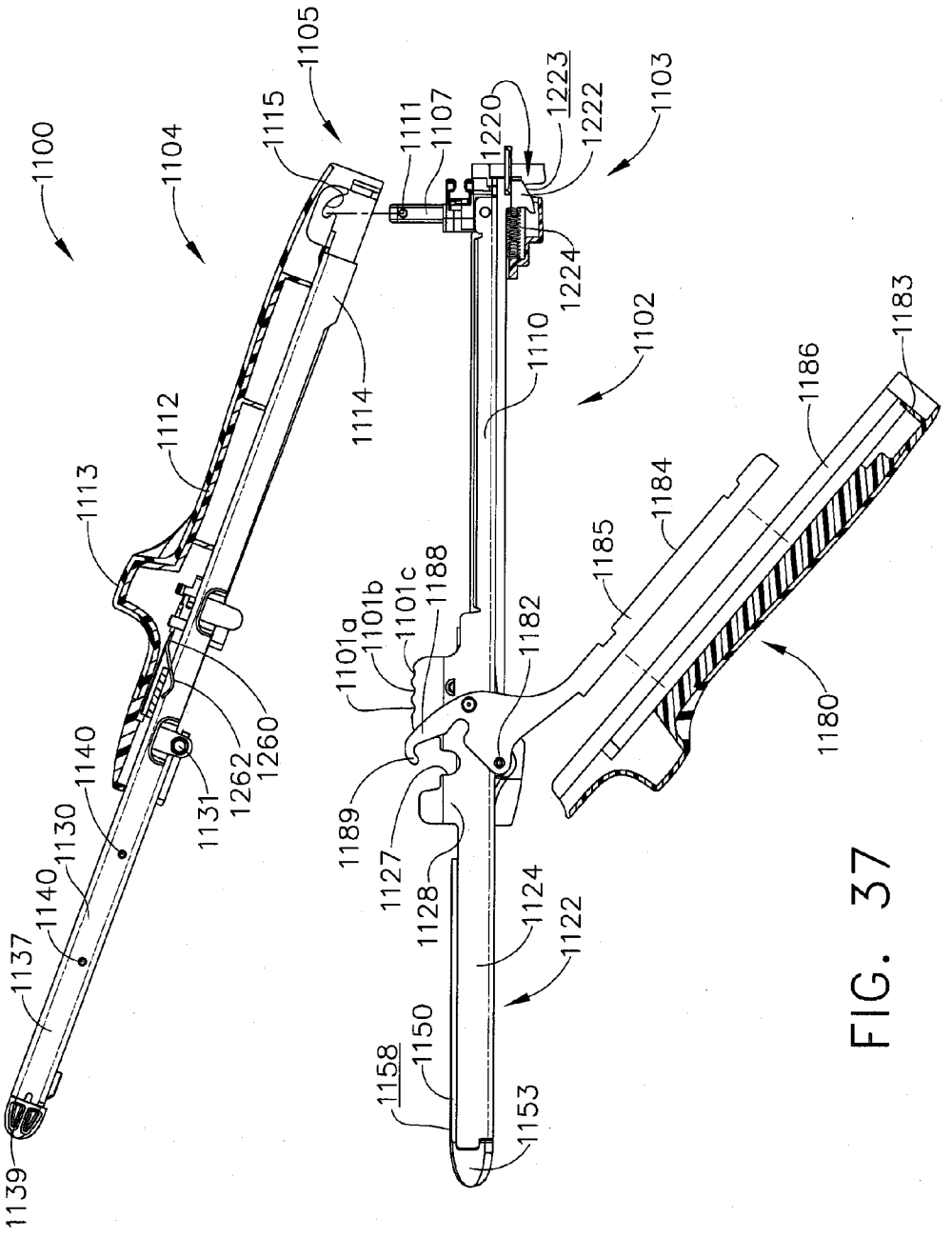
1100
1104
1105
1115
1111
1107
1220
1223
1222
1103
1224
1102
1110
1114
1112
1113
1186
1183
1184
1185
1188
1101a
1101b
1101c
1182
1180
1189
1127
1128
1124
1122
1131
1262
1260
1140
1130
1140
1137
1139
1158
1150
1153

FIG. 37

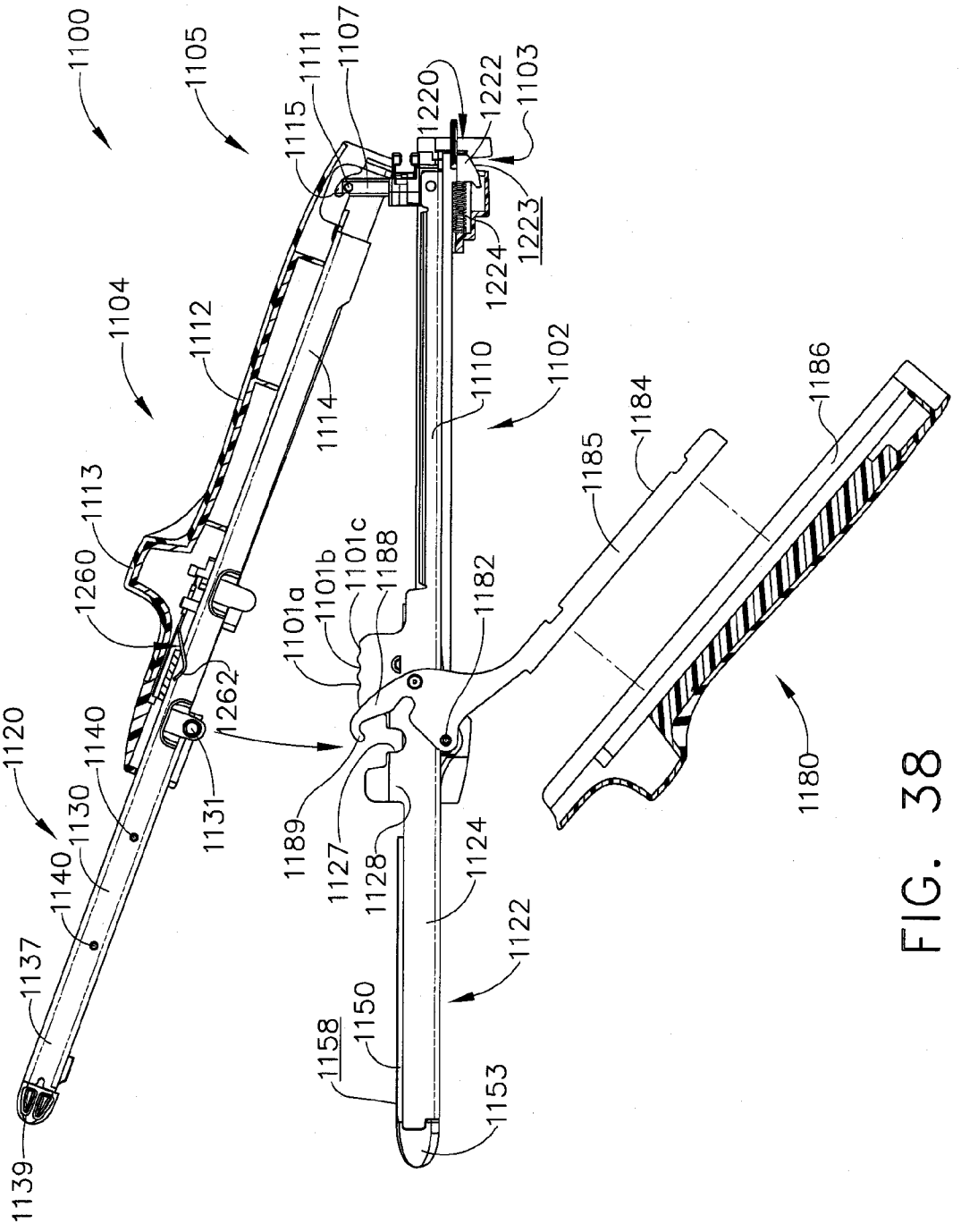
1100
1105
1107
1111
1115
1220
1222
1103
1223
1224
1104
1112
1114
1110
1102
1184
1186
1185
1113
1260
1101a
1101b
1101c
1188
1182
1262
1120
1140
1130
1131
1189
1127
1128
1124
1122
1137
1150
1158
1153
1139
1180

FIG. 38

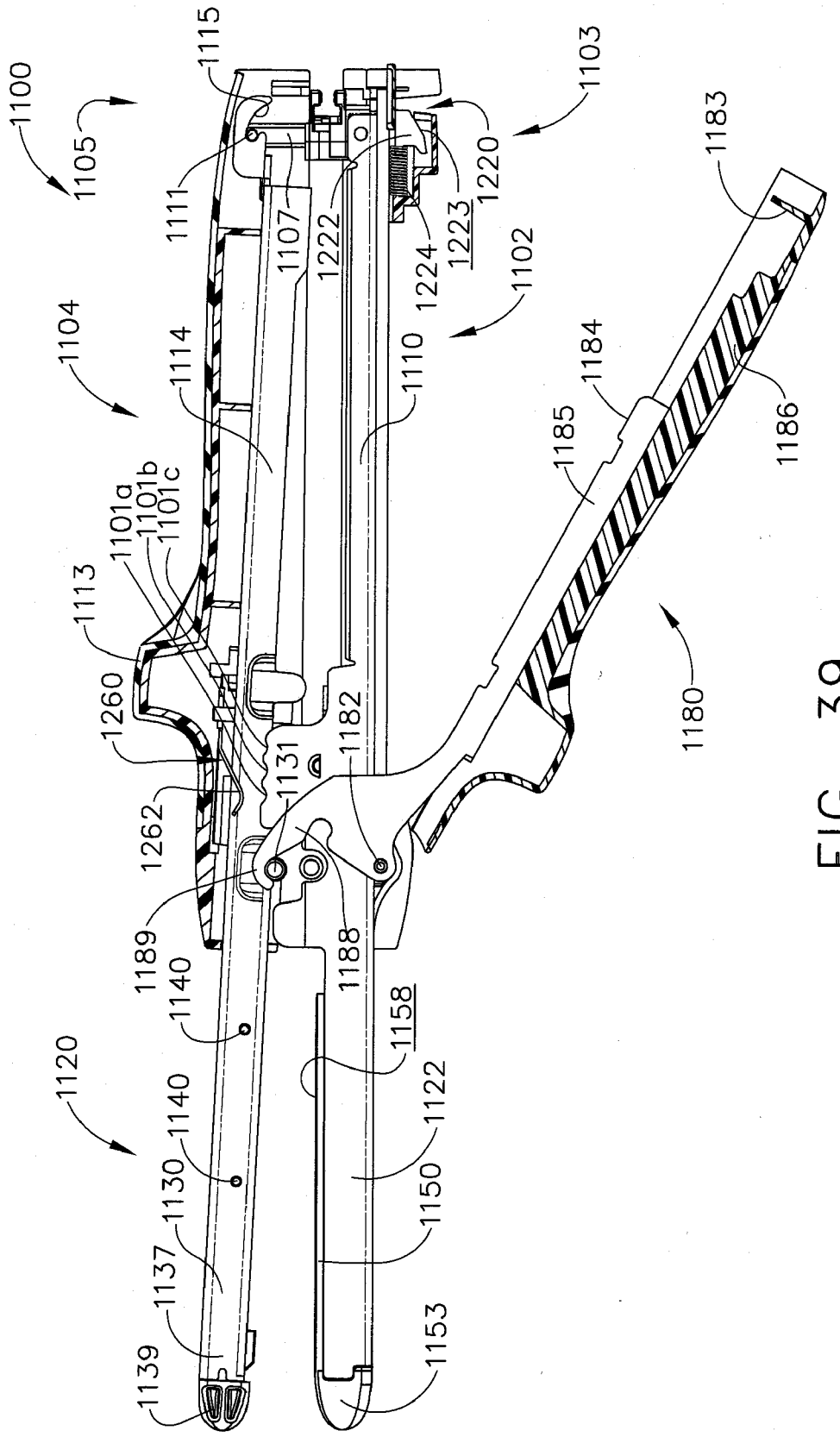
1100
1105
1115
1111
1107
1222
1223
1220
1103
1183
1102
1224
1104
1114
1110
1184
1185
1186
1101a
1101b
1101c
1113
1260
1182
1131
1180
1262
1189
1188
1140
1158
1120
1122
1140
1130
1150
1137
1153
1139

FIG. 39

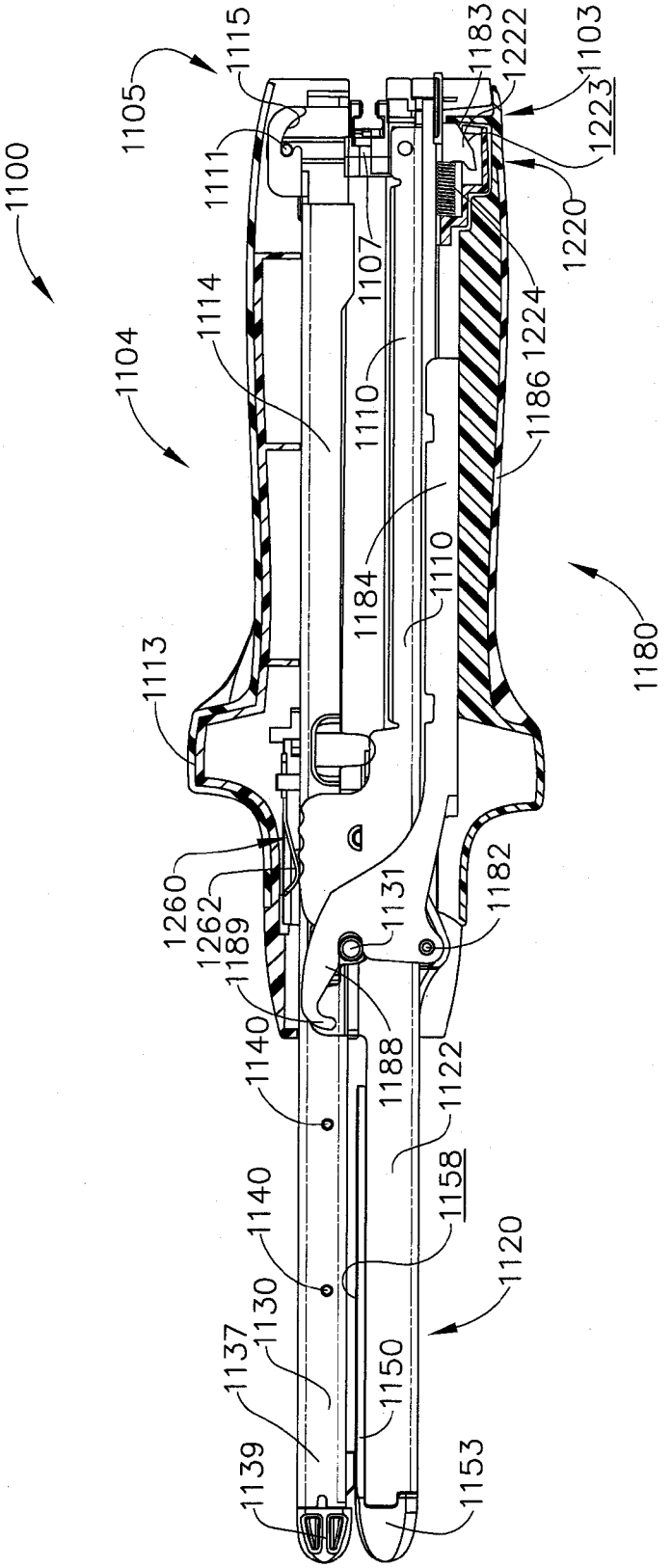
1100
1105
1115
1111
1114
1104
1113
1260
1262
1189
1140
1140
1130
1137
1139
1107
1110
1184
1110
1131
1188
1122
1158
1120
1150
1153
1180
1182
1183
1222
1103
1223
1220
1224
1186

FIG. 40

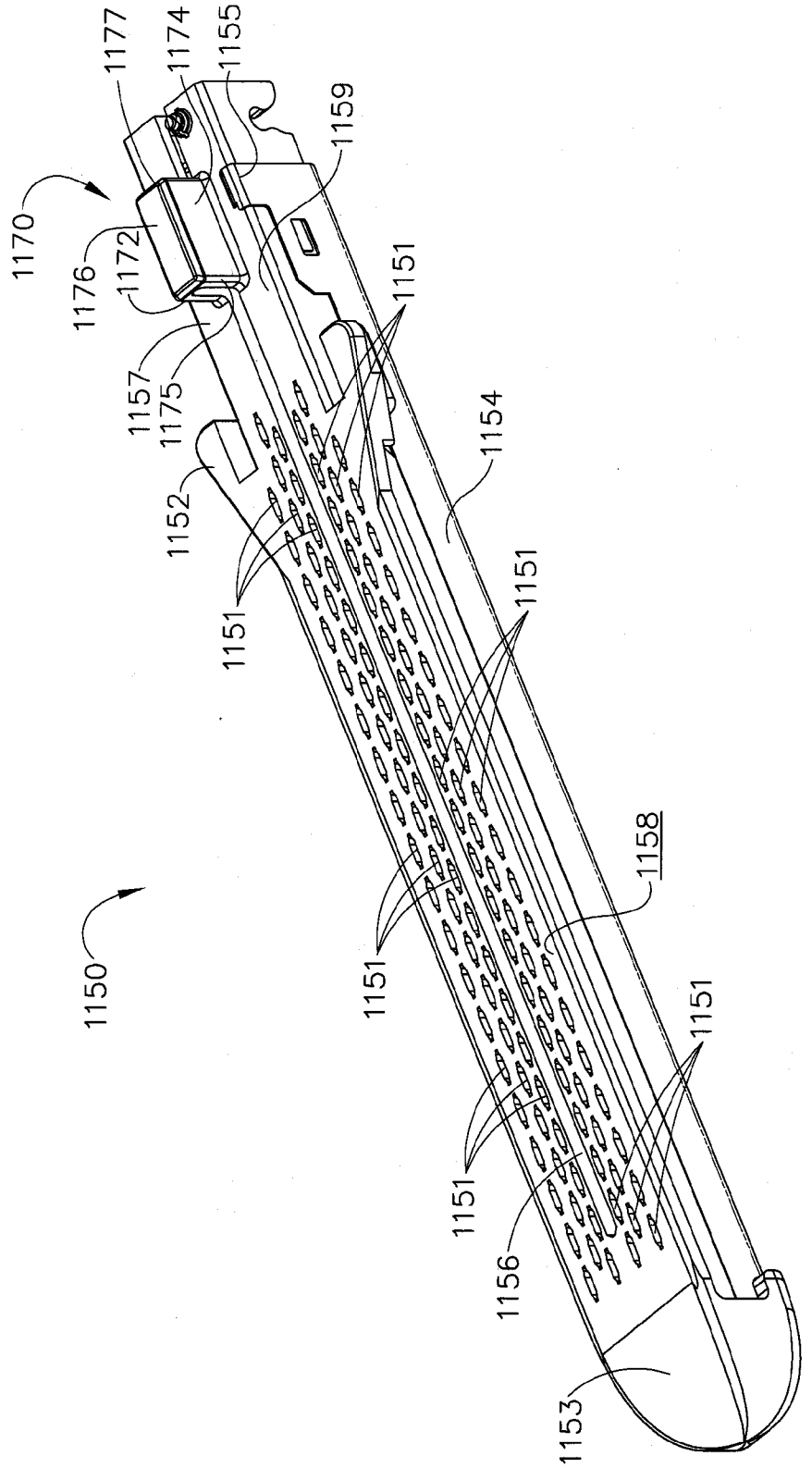
1177
1174
1155
1159
1170
1176
1172
1151
1157
1175
1154
1152
1151
1151
1158
1150
1151
1151
1156
1153

FIG. 41

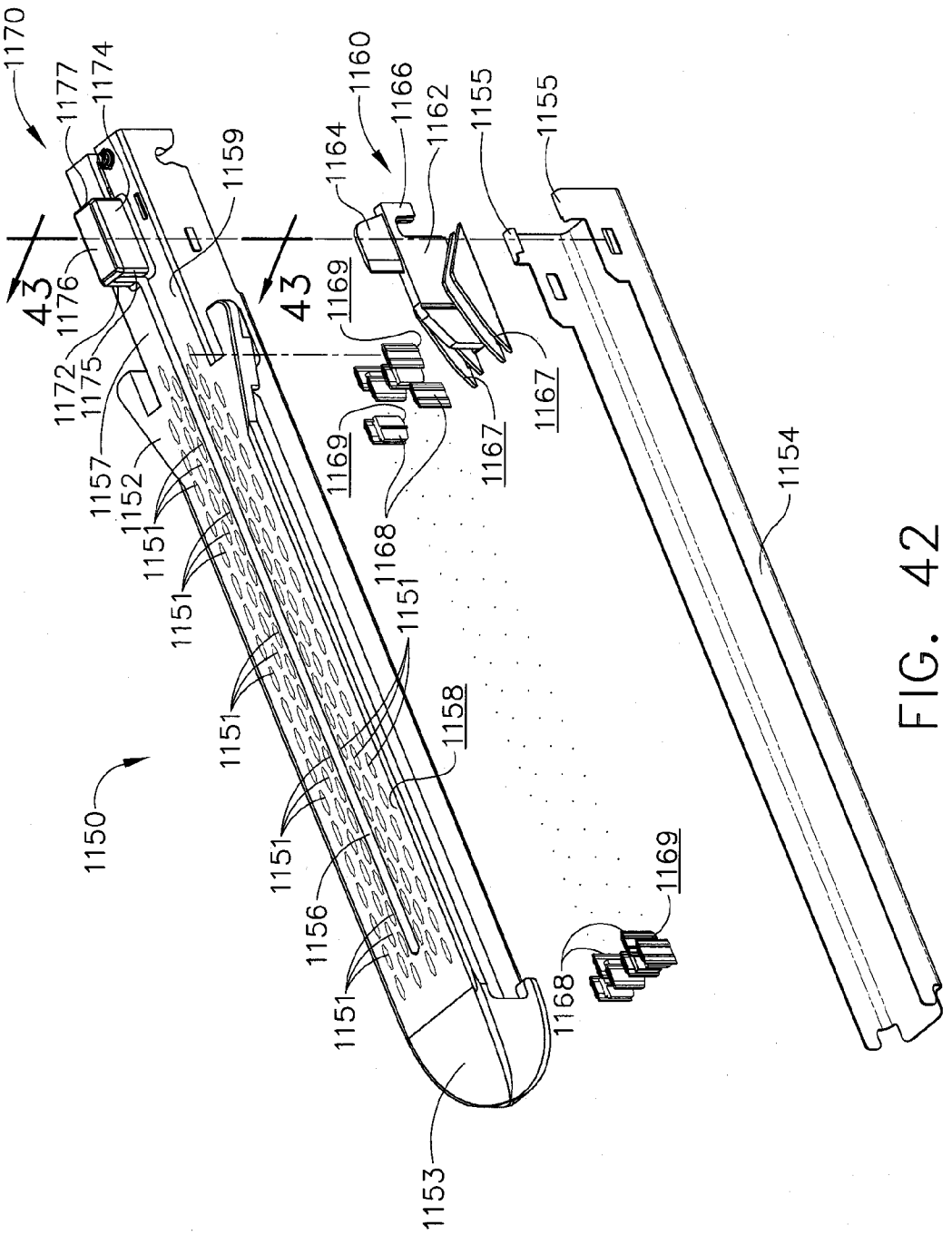
1170
1177
1174
1159
1160
1166
1164
1162
1155
1155
43
43
1176
1172
1175
1157
1152
1151
1151
1151
1151
1151
1151
1156
1151
1153
1169
1169
1168
1167
1167
1168
1169
1158
1150
1154

FIG. 42

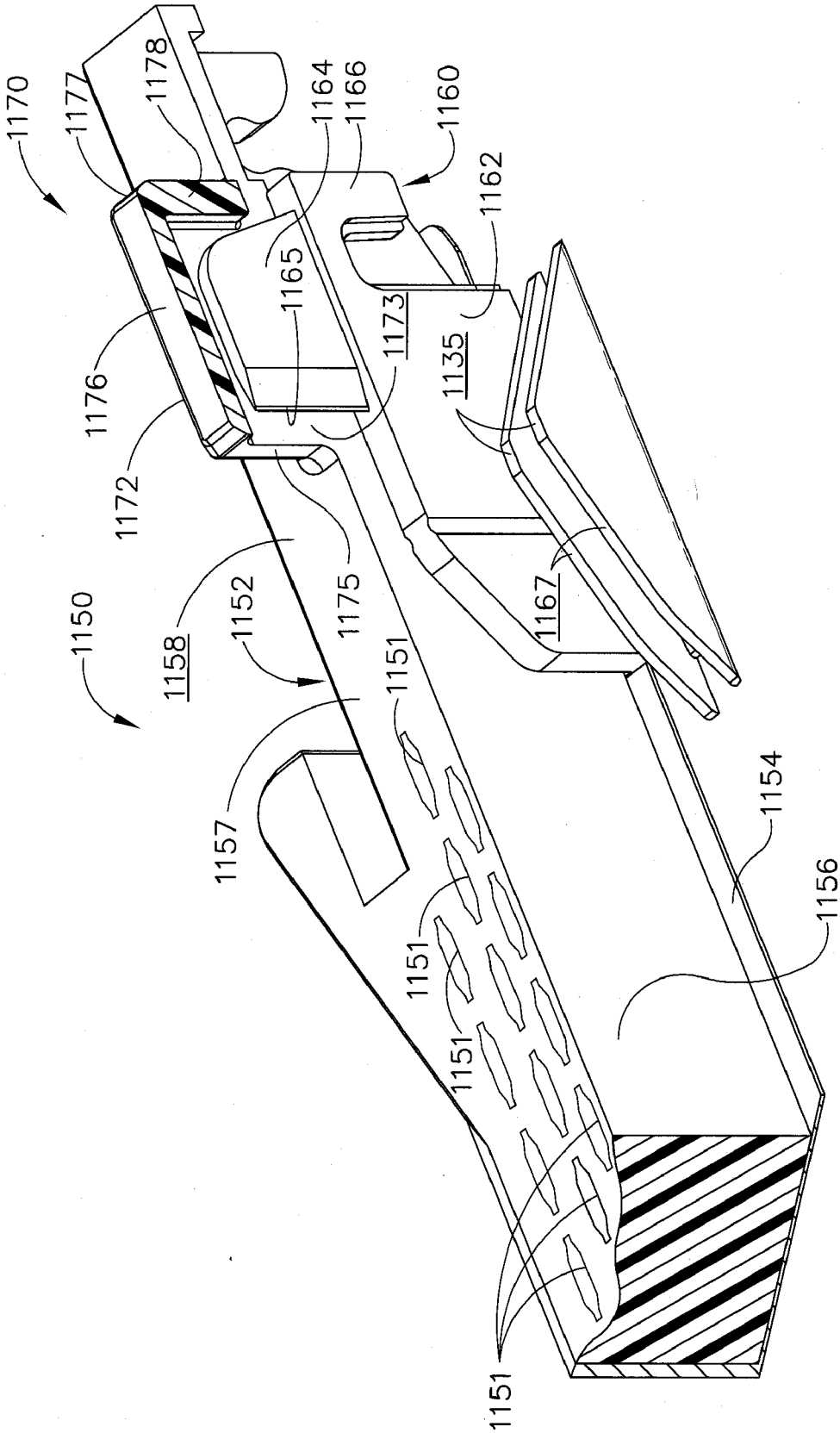
1170
1177
1178
1164
1166
1160
1162
1165
1173
1135
1176
1172
1175
1167
1150
1158
1152
1151
1157
1154
1156
1151
1151
1151

FIG. 43

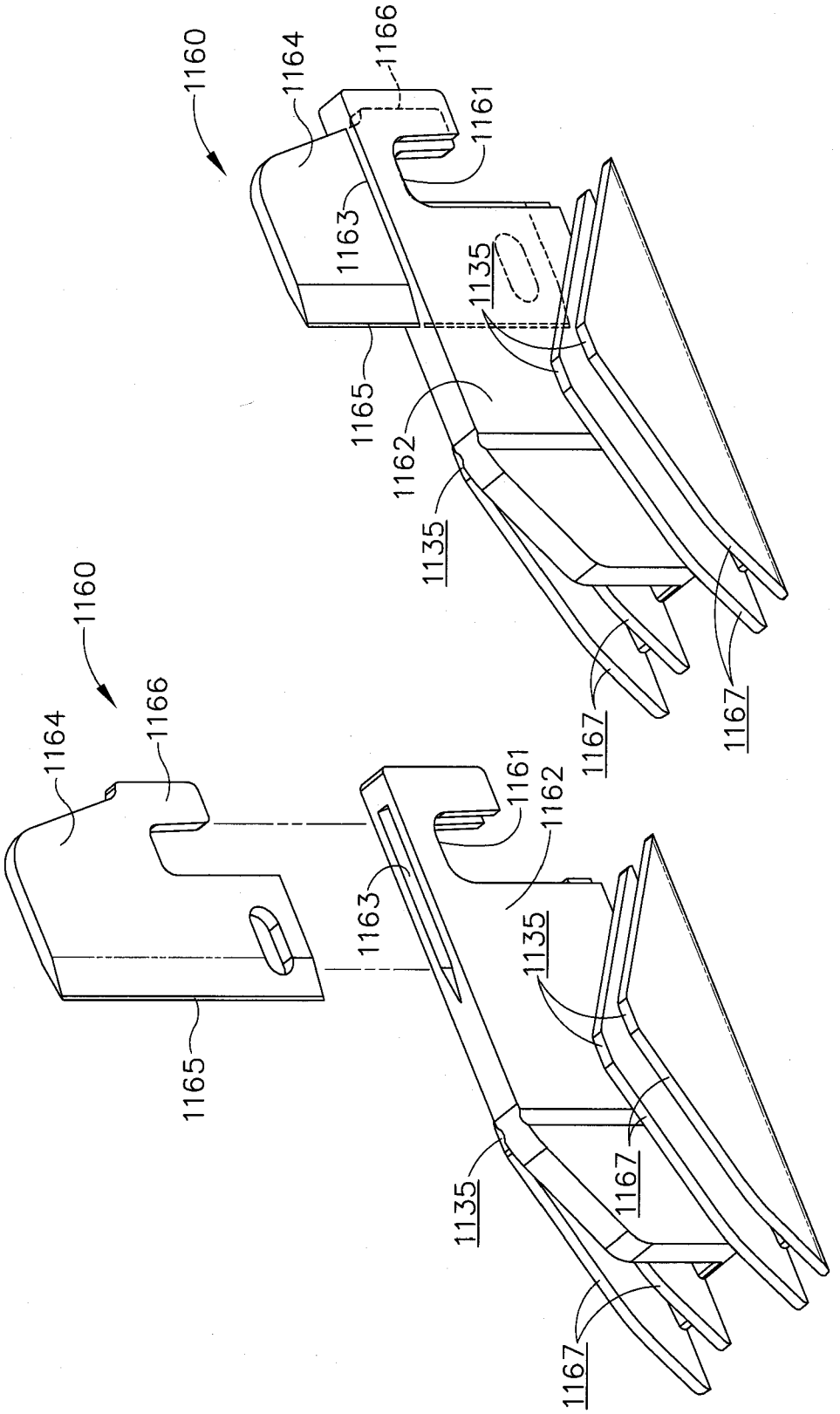
1160
1164
1166
1161
1163
1135
1165
1162
1135
1167
1167
1160
1164
1166
1161
1162
1163
1135
1165
1135
1167
1167

FIG. 45

FIG. 44

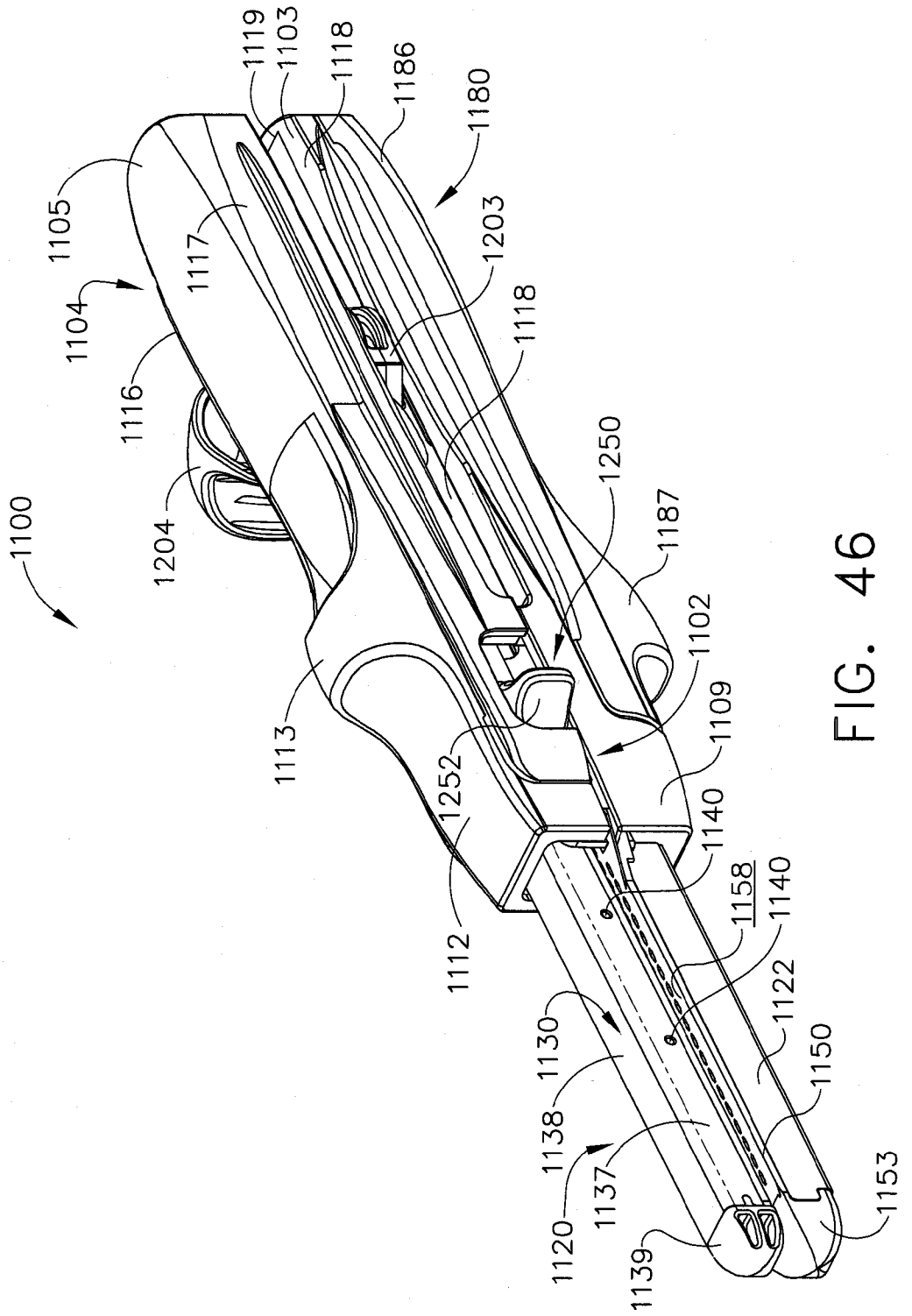
1100
1105
1104
1116
1204
1117
1119
1103
1118
1186
1180
1203
1118
1250
1187
1102
1109
1140
1158
1140
1122
1150
1153
1113
1252
1112
1130
1138
1137
1120
1139

FIG. 46

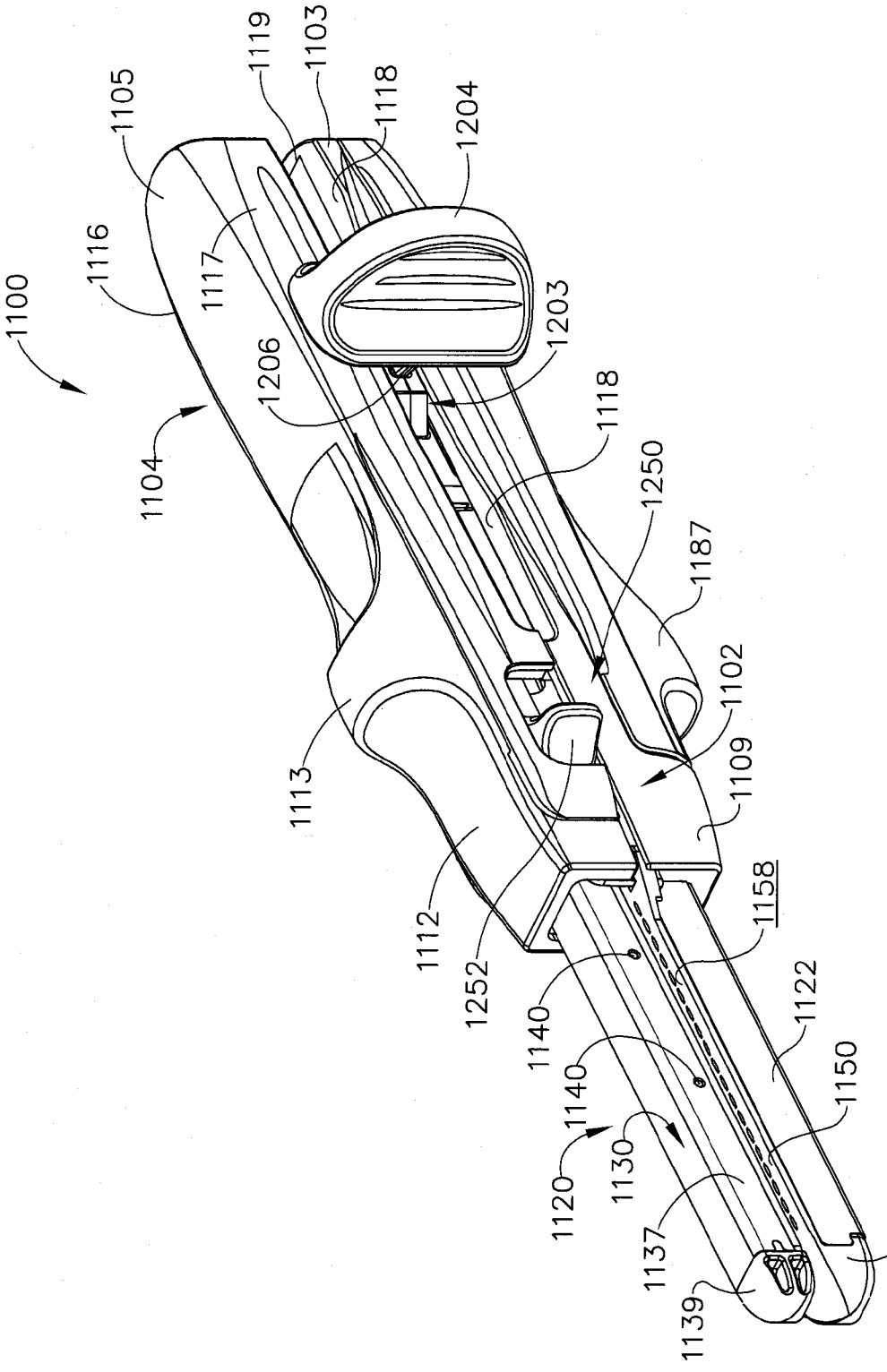
1100
1104
1105
1116
1117
1119
1103
1118
1204
1203
1206
1118
1250
1187
1102
1109
1158
1122
1150
1153
1139
1137
1130
1120
1140
1140
1252
1112
1113

FIG. 47

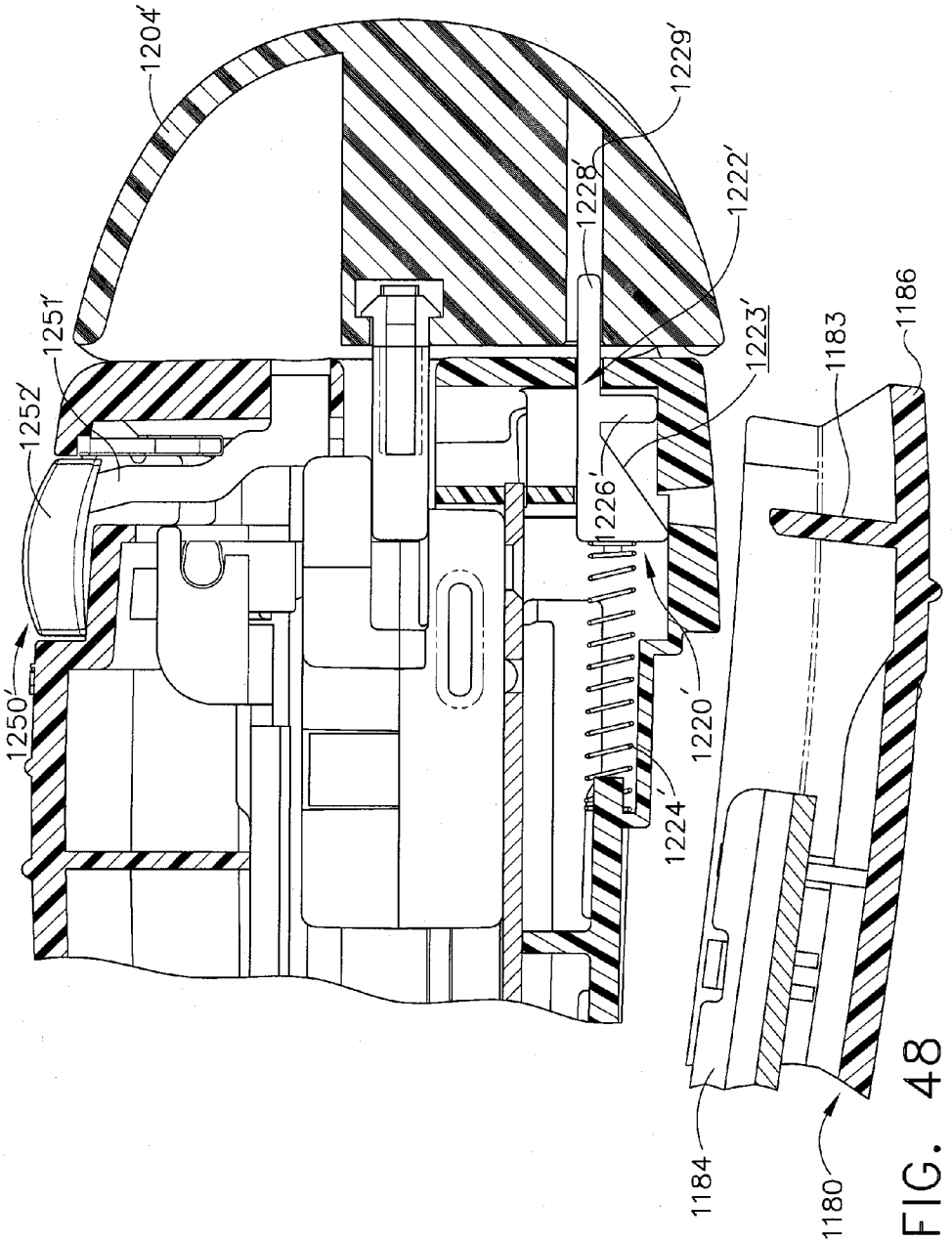
1204'
1229'
1228'
1222'
1251'
1223'
1183
1186
1252'
1226'
1250'
1220'
1224'
1184
1180

FIG. 48

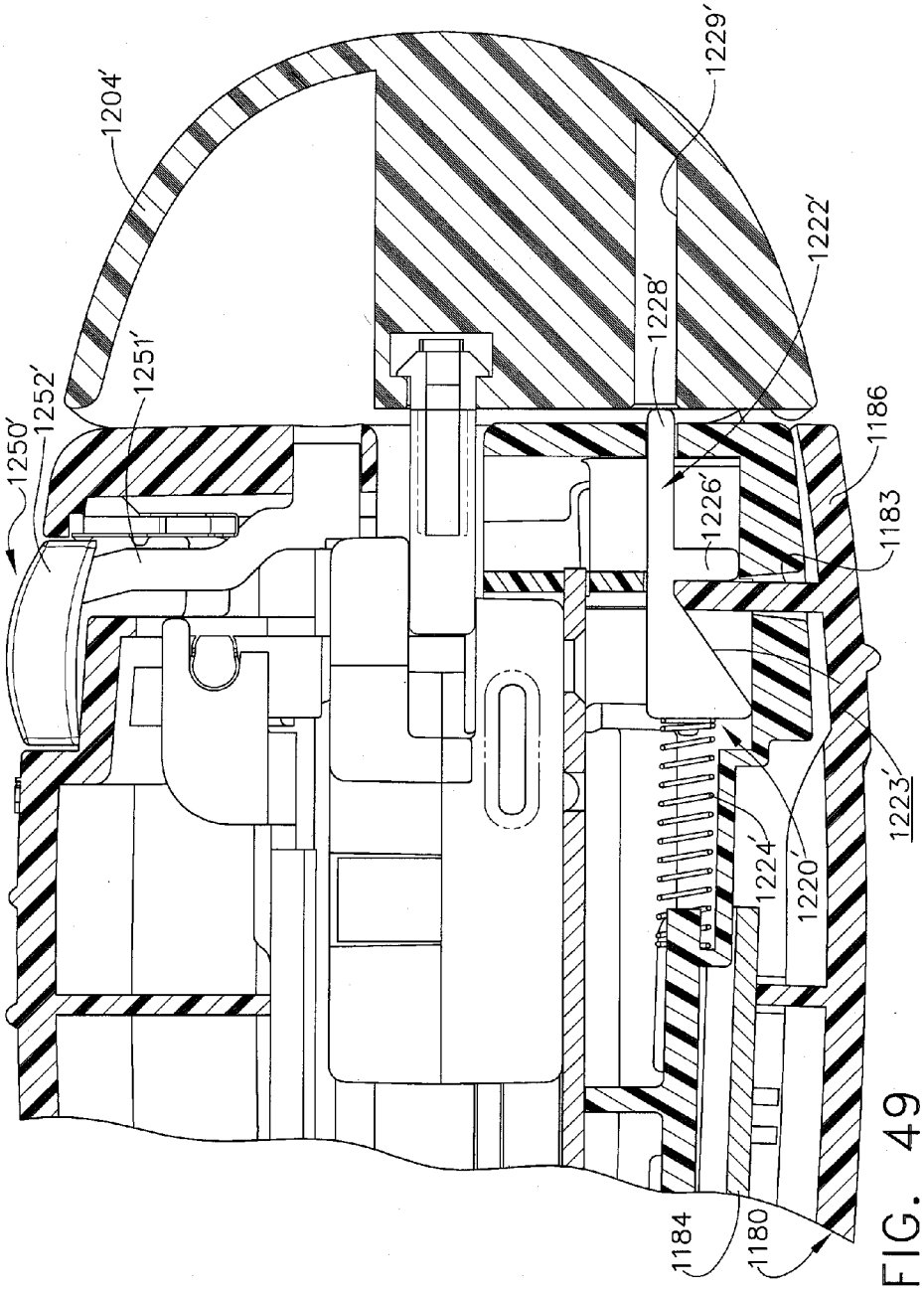
1204'
1229'
1222'
1228'
1251'
1252'
1250'
1186
1226'
1183
1223'
1224'
1220'
1184
1180

FIG. 49

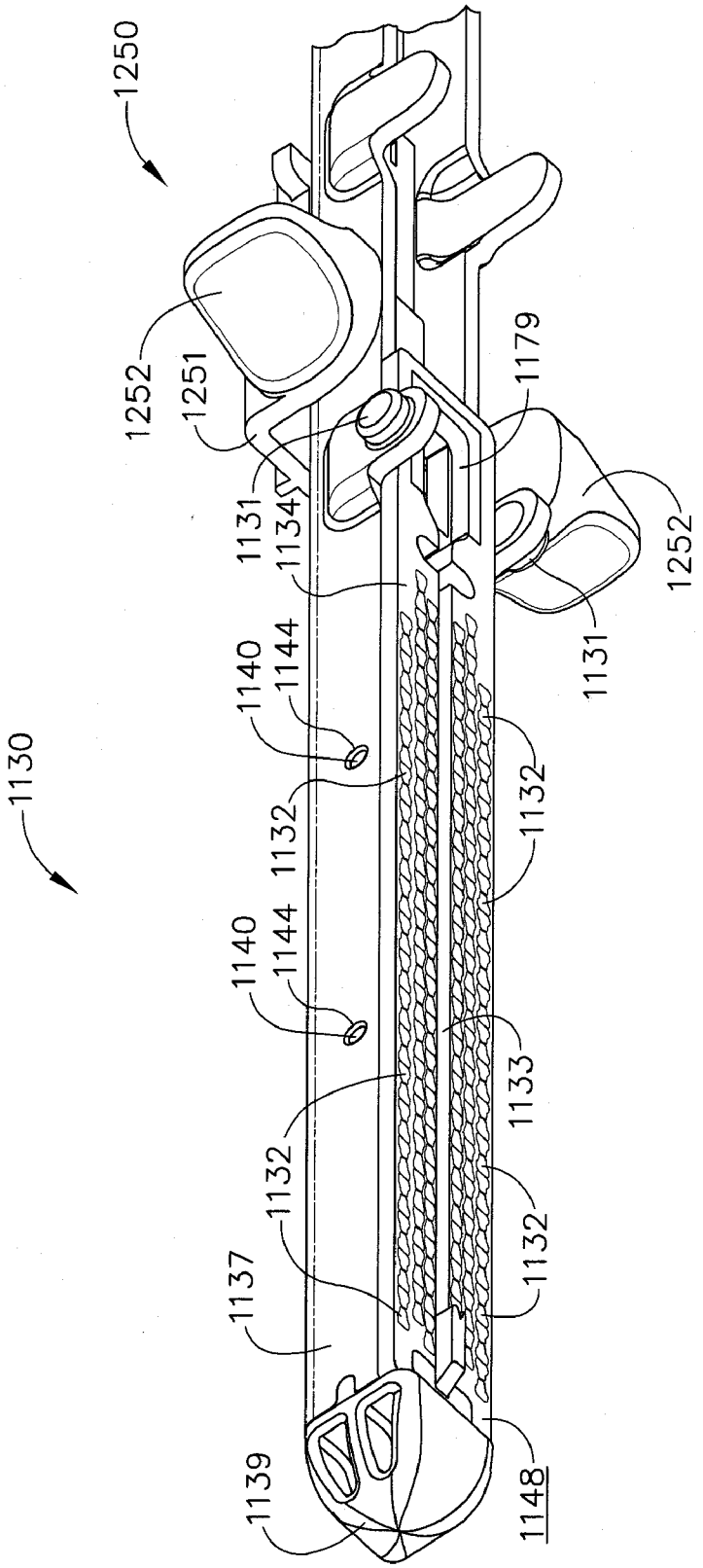
1250
1252
1251
1179
1131
1134
1252
1140
1144
1131
1130
1132
1132
1140
1144
1133
1132
1132
1137
1139
1148

FIG. 50

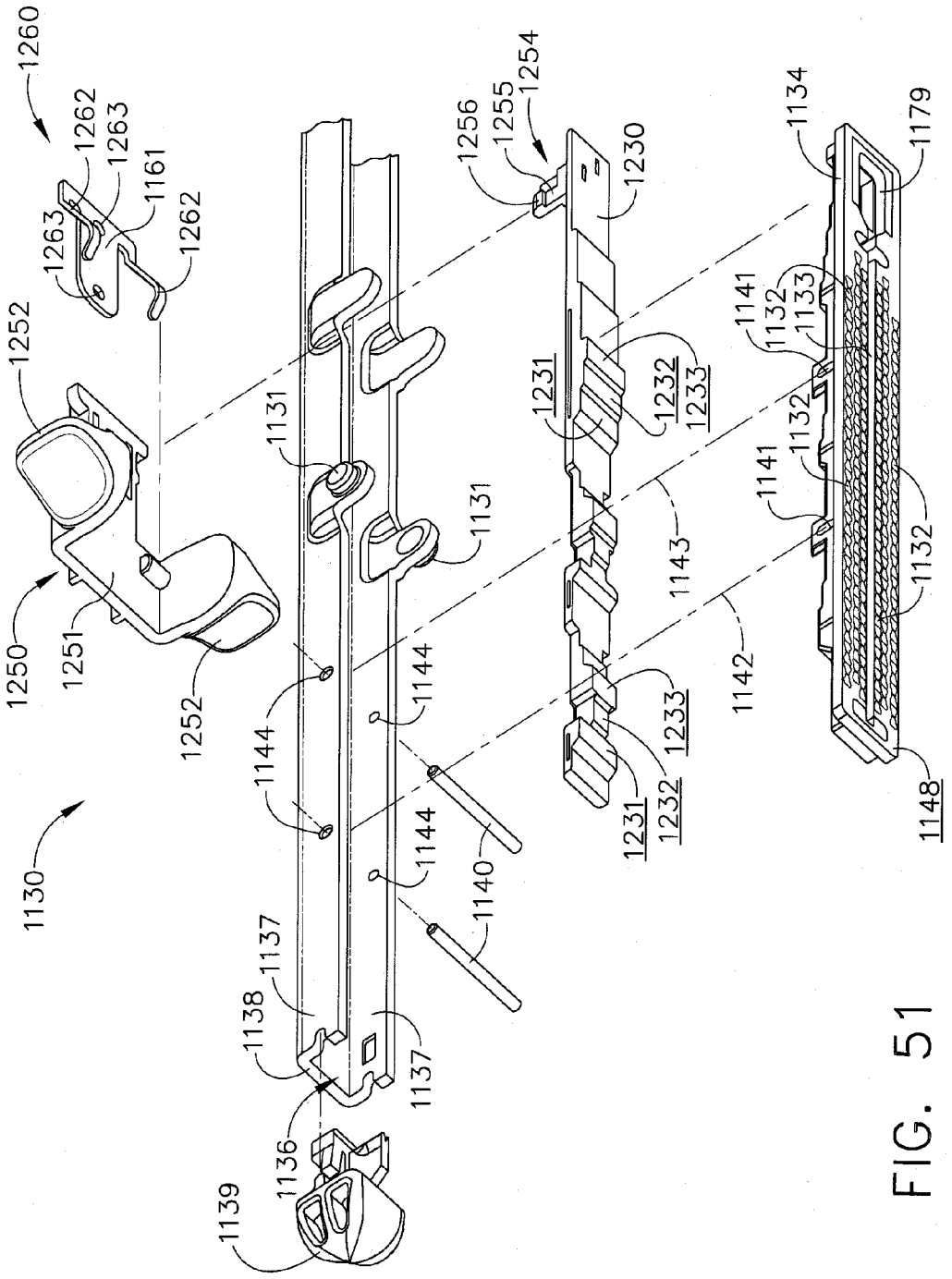
1260
1262
1263
1161
1263
1262
1252
1250
1251
1252
1130
1131
1131
1144
1144
1144
1140
1137
1138
1137
1136
1139
1256
1255
1254
1230
1231
1232
1233
1231
1232
1233
1143
1142
1134
1179
1141
1132
1133
1141
1132
1132
1148

FIG. 51

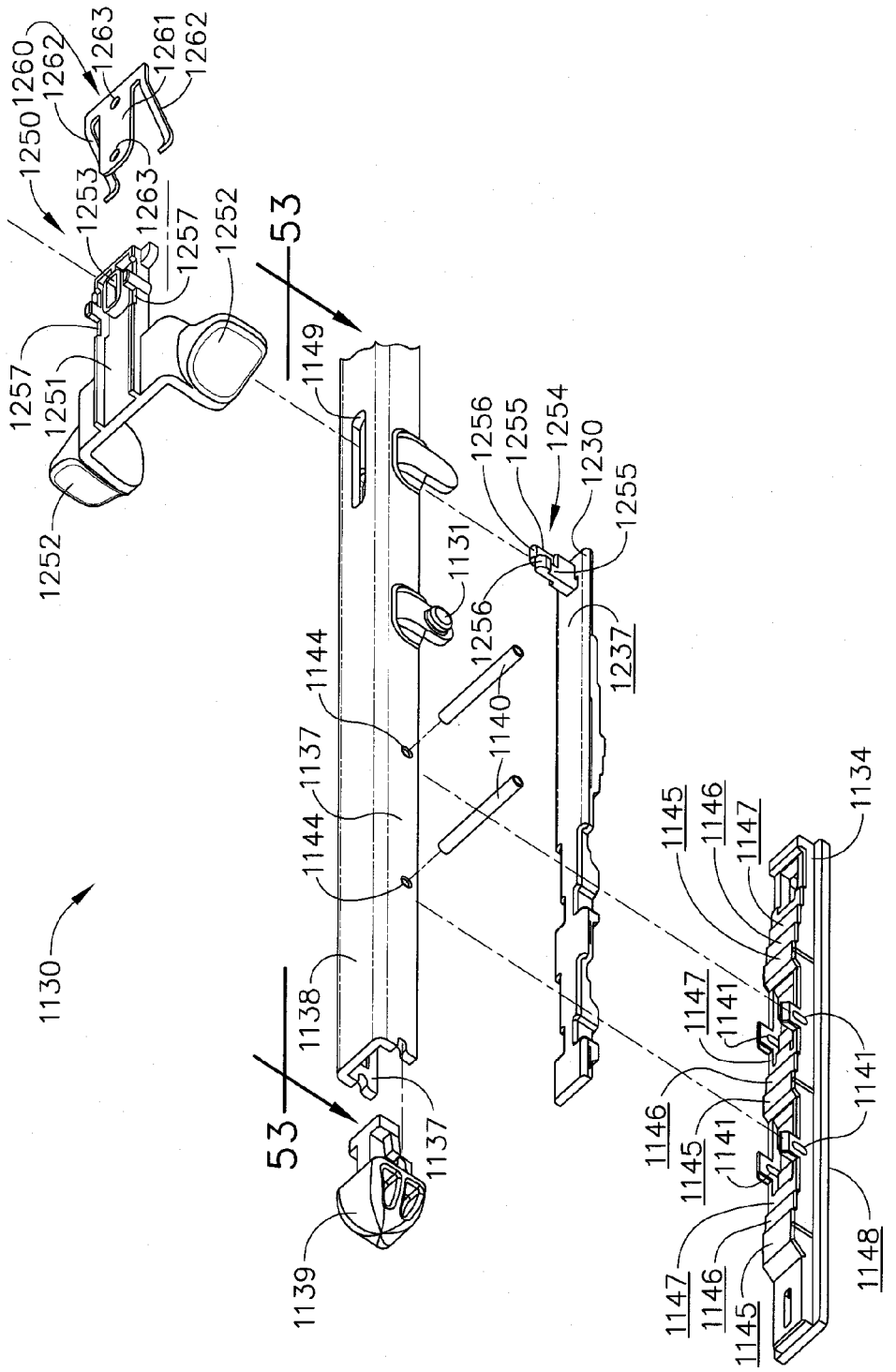
1130
1250
1260
1262
1263
1261
1262
1253
1263
1257
1252
53
1257
1251
1252
1149
1256
1255
1254
1230
1255
1131
1256
1237
1144
1140
1137
1144
1144
1137
1138
53
1139
1145
1146
1147
1134
1147
1141
1146
1145
1141
1141
1147
1146
1145
1148

FIG. 52

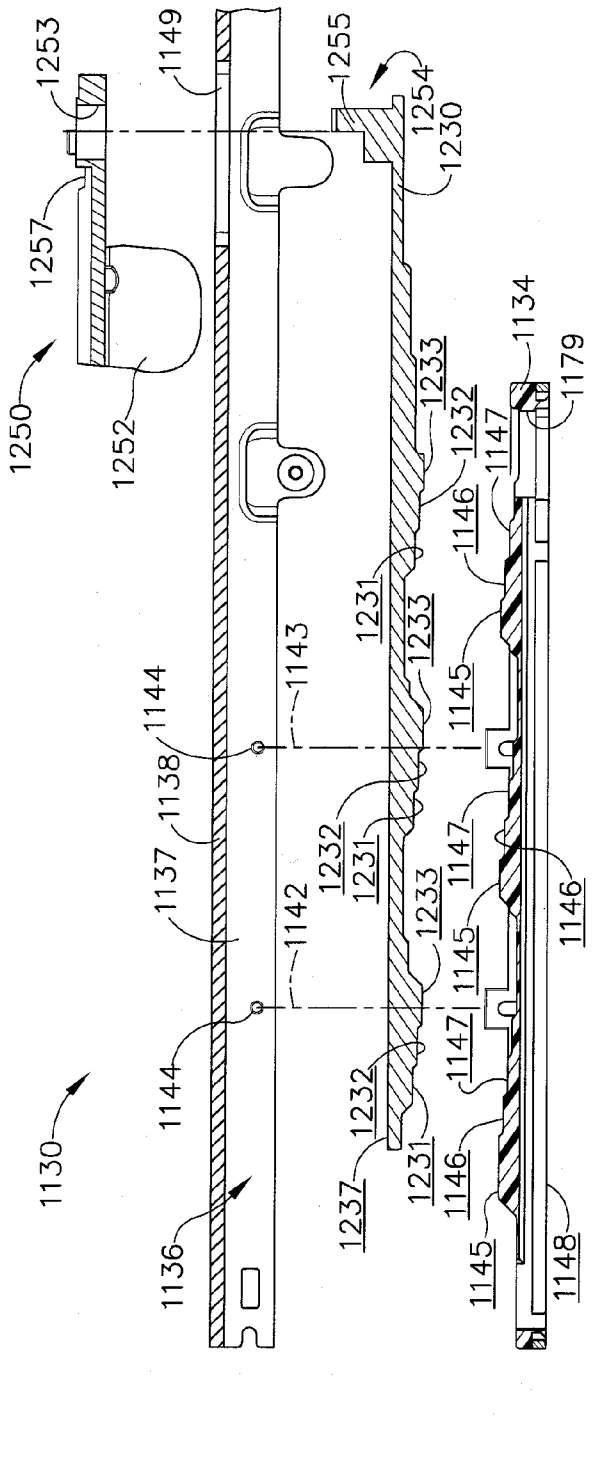
1253
1149
1255
1254
1230
1257
1250
1252
1134
1233
1232
1147
1179
1146
1231
1143
1145
1144
1138
1137
1142
1130
1136
1148

FIG. 53

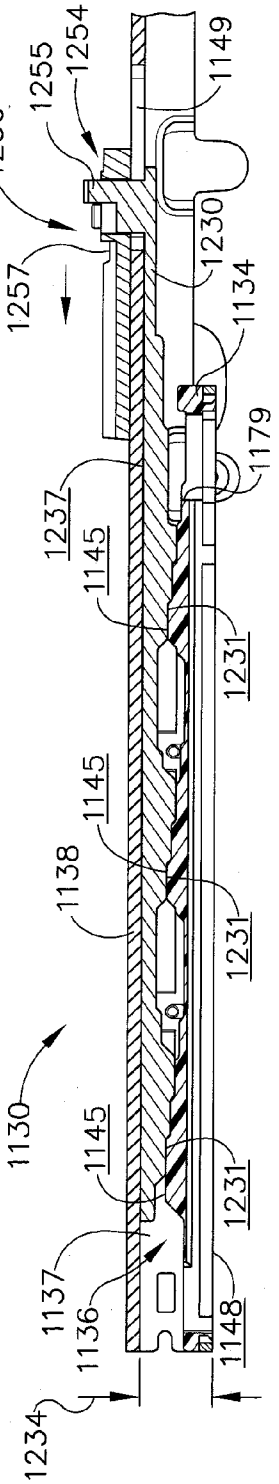
1250
1255
1254
1149
1230
1257
1134
1179
1237
1145
1231
1138
1130
1137
1136
1234
1148

FIG. 54

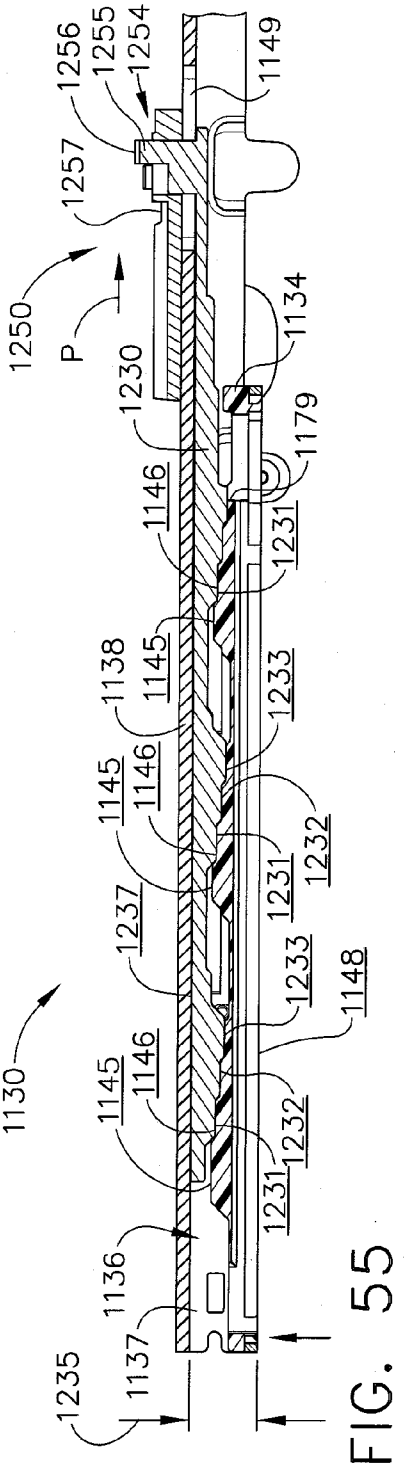
1256
1255
1254
1149
1257
1250
P
1230
1134
1179
1146
1231
1138
1145
1233
1145
1146
1232
1237
1231
1233
1148
1130
1145
1146
1232
1231
1136
1137
1235

FIG. 55

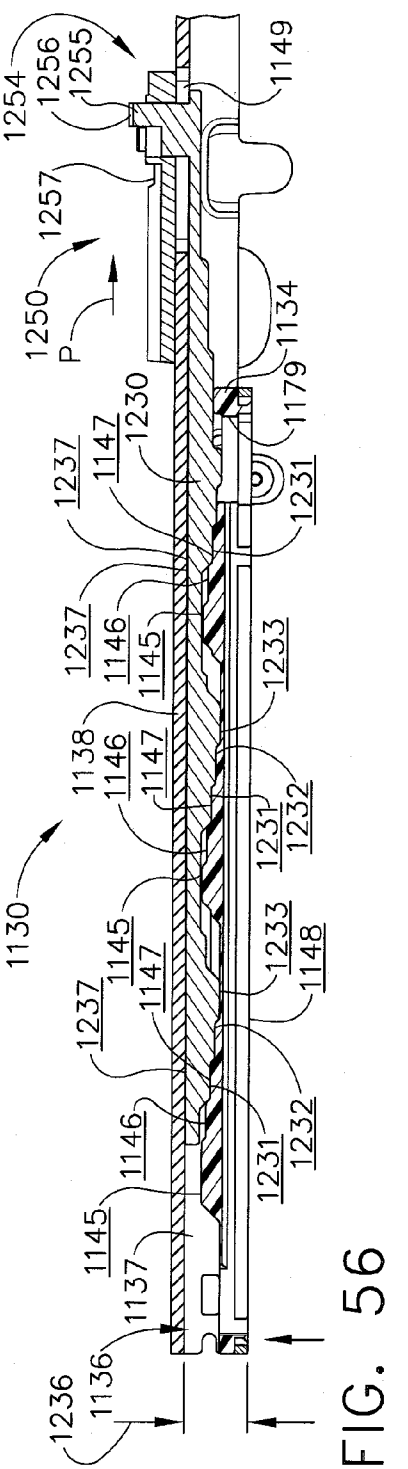
1254
1256
1255
1149
1257
1250
P
1134
1230
1179
1237
1147
1231
1237
1146
1145
1233
1138
1146
1147
1231
1232
1130
1233
1145
1147
1148
1237
1146
1232
1231
1145
1137
1236
1136

FIG. 56

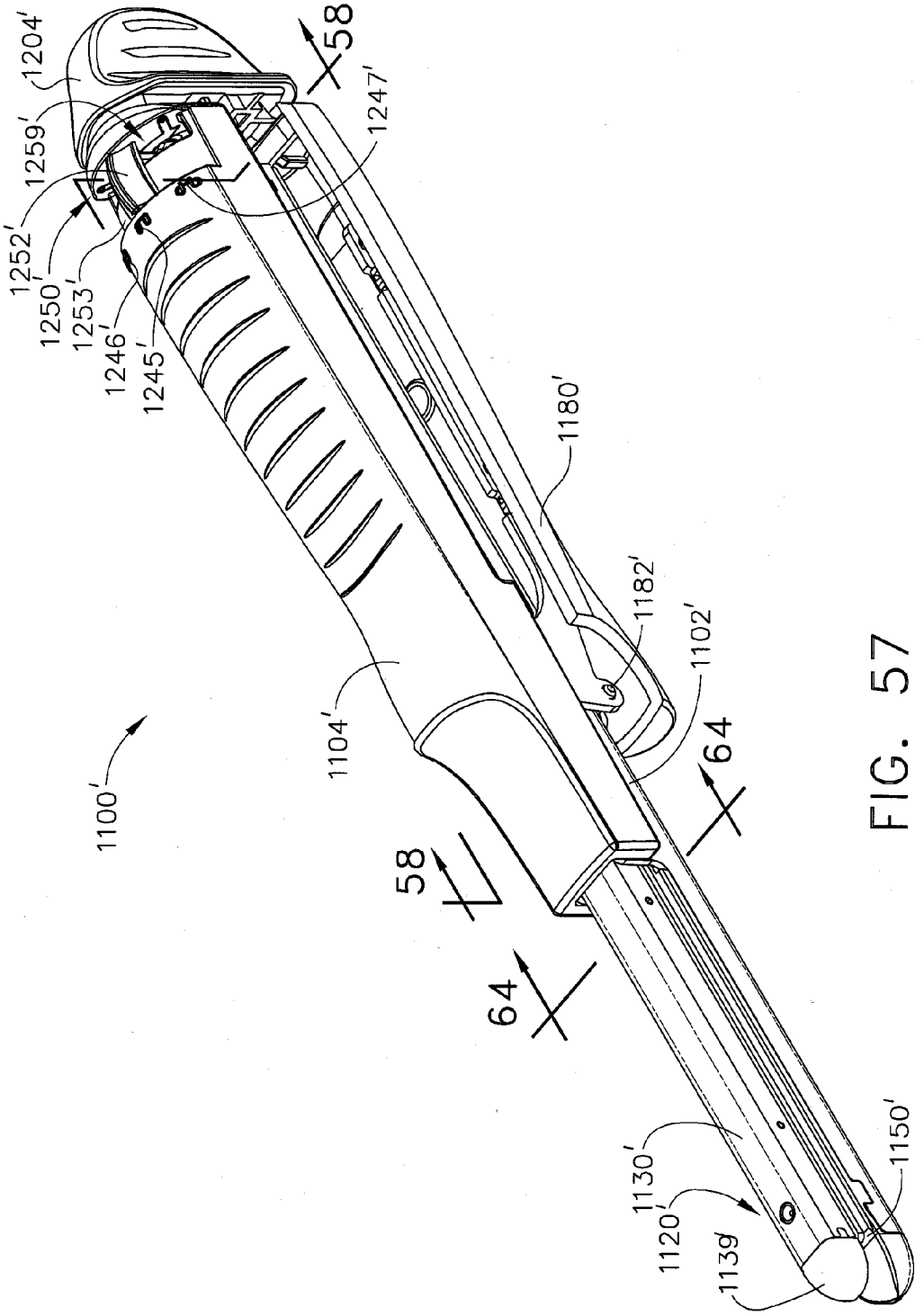
1204'
1259'
1252'
1250'
1253'
1246'
1245'
58
1247'
1180'
1182'
1102'
1104'
64
58
64
1100'
1130'
1120'
1139'
1150'

FIG. 57

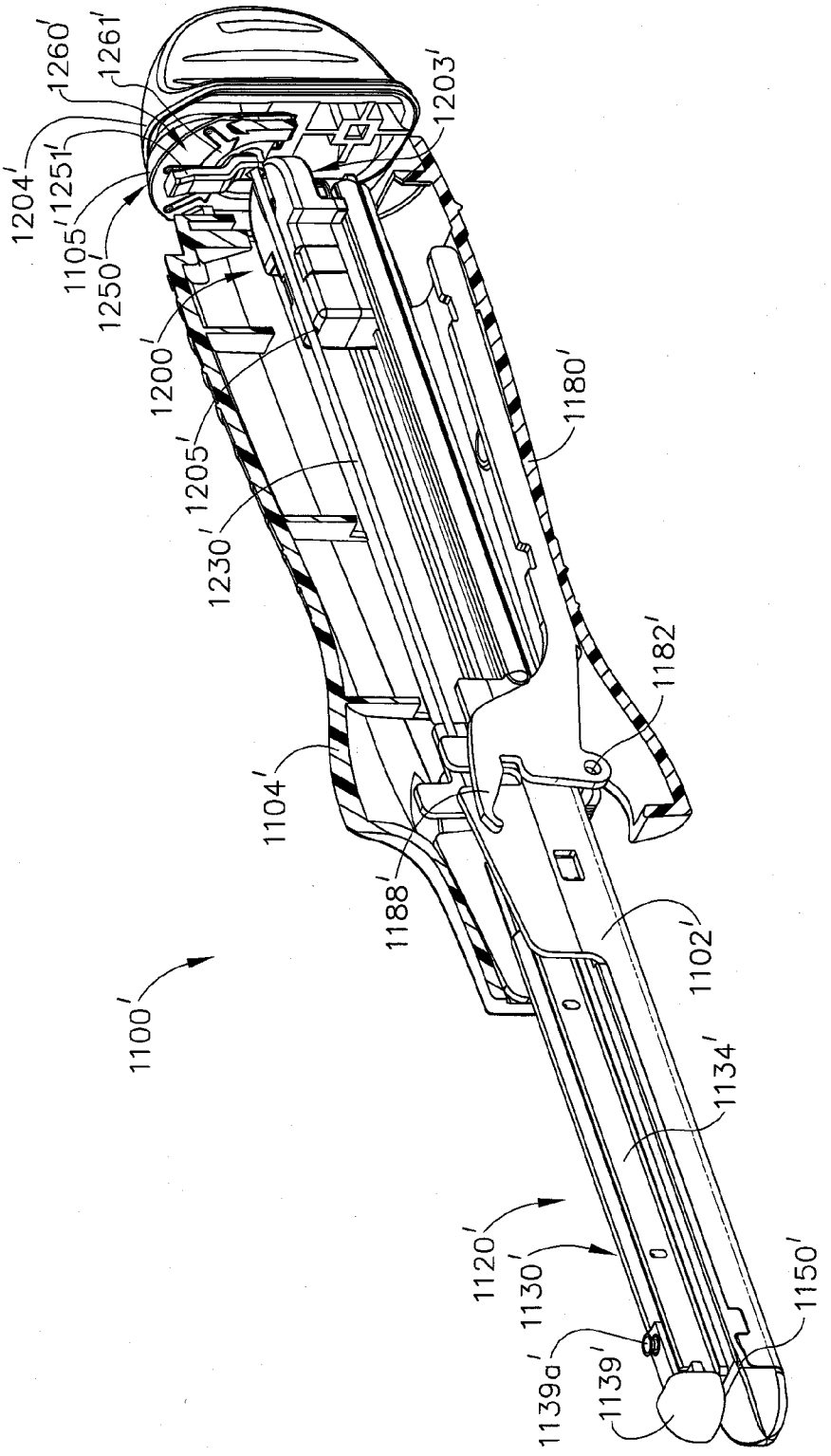
1260'
1261'
1203'
1204'
1251'
1105'
1250'
1200'
1180'
1205'
1230'
1182'
1104'
1188'
1102'
1100'
1134'
1120'
1130'
1150'
1139a'
1139'

FIG. 58

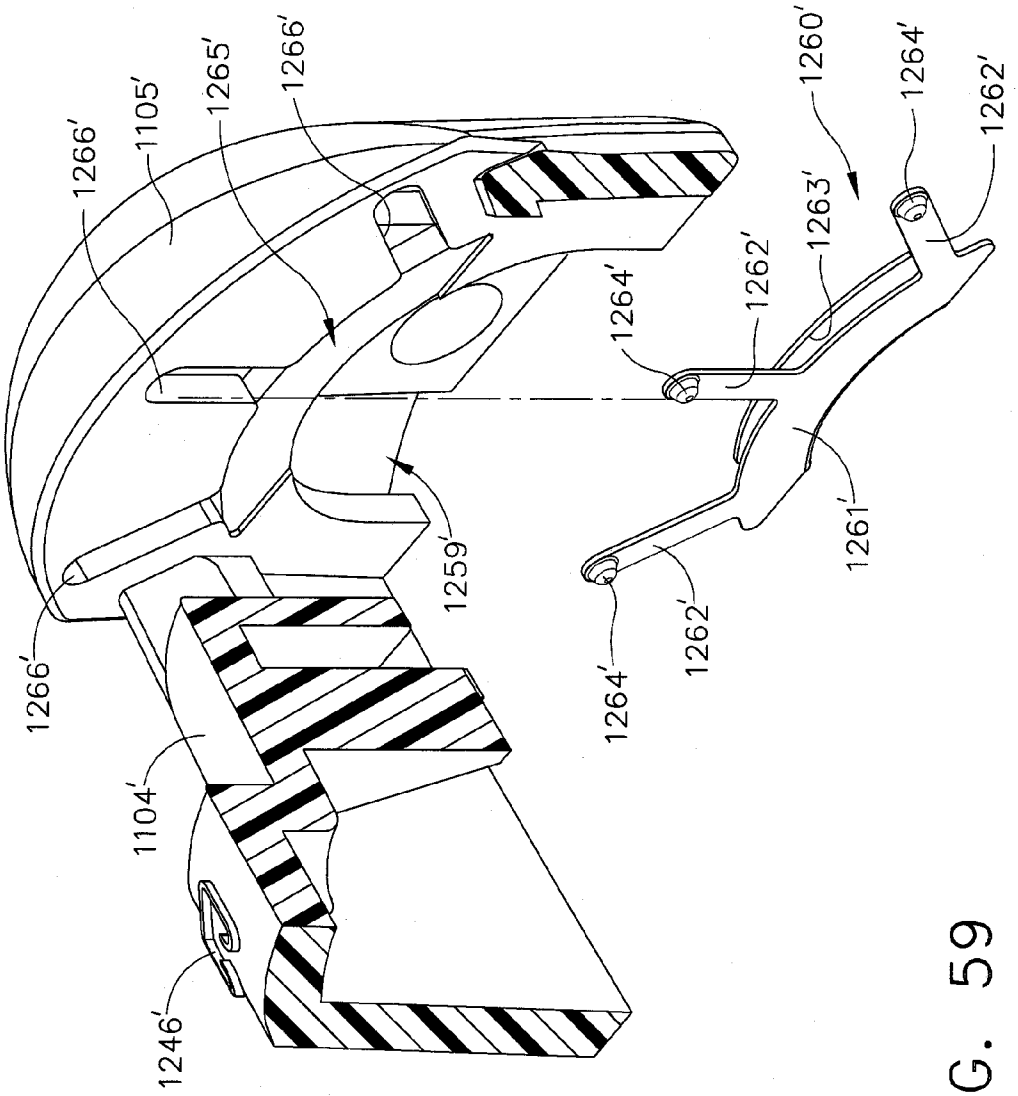
1266'
1105'
1265'
1266'
1260'
1264'
1262'
1263'
1264'
1262'
1259'
1261'
1266'
1264'
1262'
1104'
1246'

FIG. 59

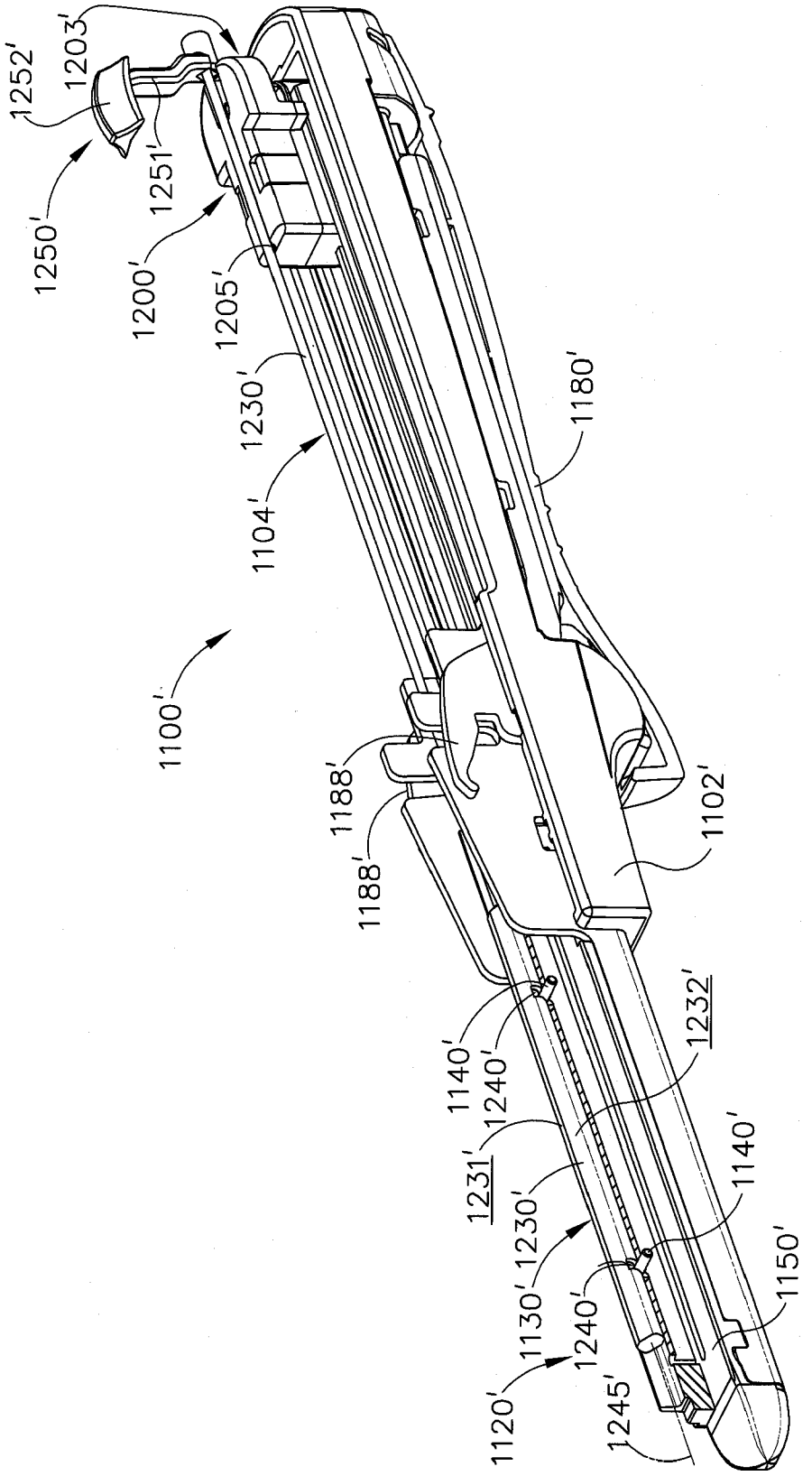
1252'
1203'
1251'
1250'
1200'
1205'
1230'
1104'
1100'
1180'
1188'
1188'
1102'
1140'
1240'
1232'
1231'
1230'
1140'
1130'
1240'
1150'
1120'
1245'

FIG. 60

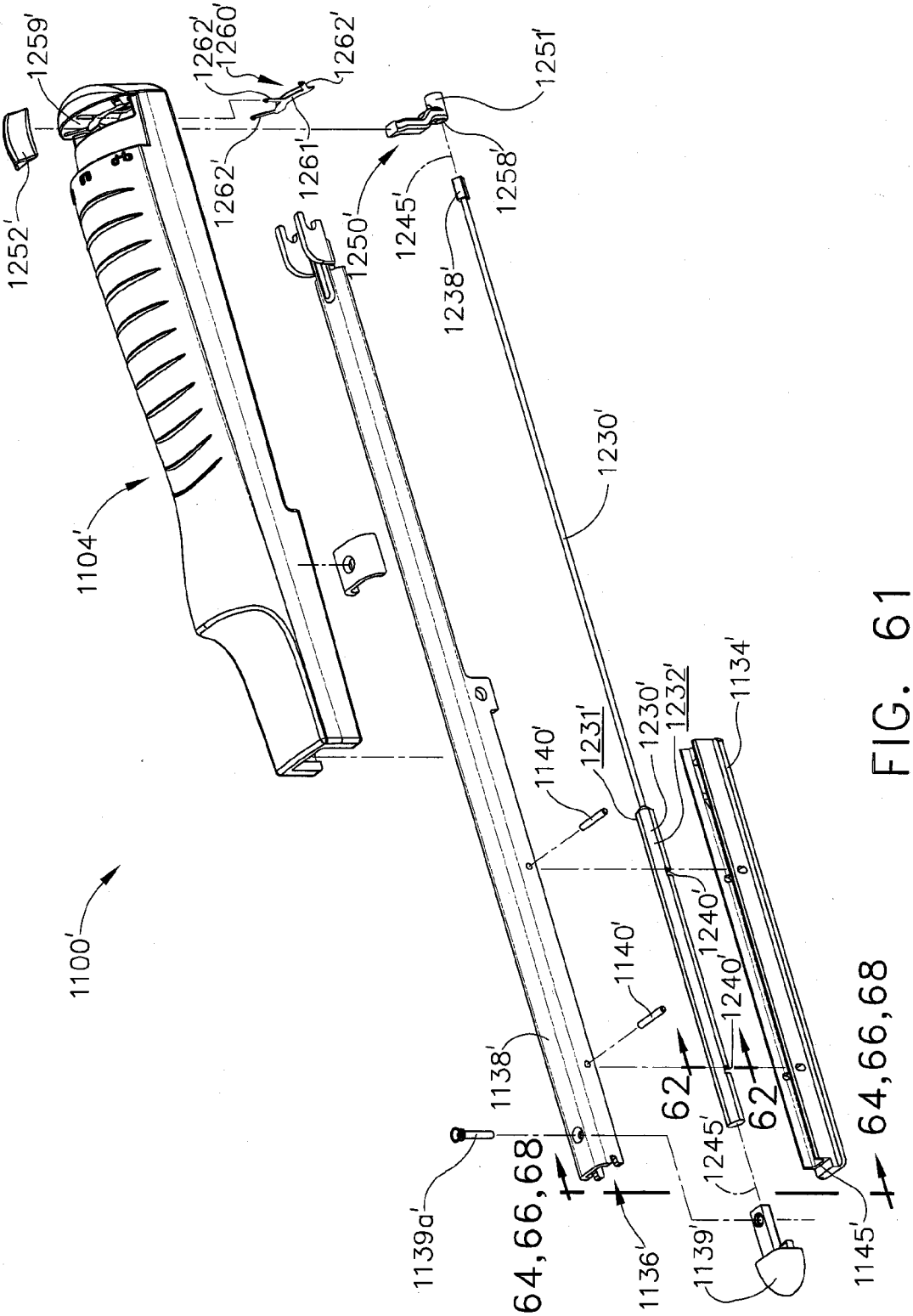
1100'
1104'
1252'
1259'
1262'
1260'
1262'
1261'
1262'
1250'
1245'
1238'
1258'
1251'
1230'
1140'
1231'
1230'
1232'
1134'
1140'
1240'
1240'
1138'
1139a'
1136'
1139'
1245'
1145'
62
62
64,66,68
64,66,68

FIG. 61

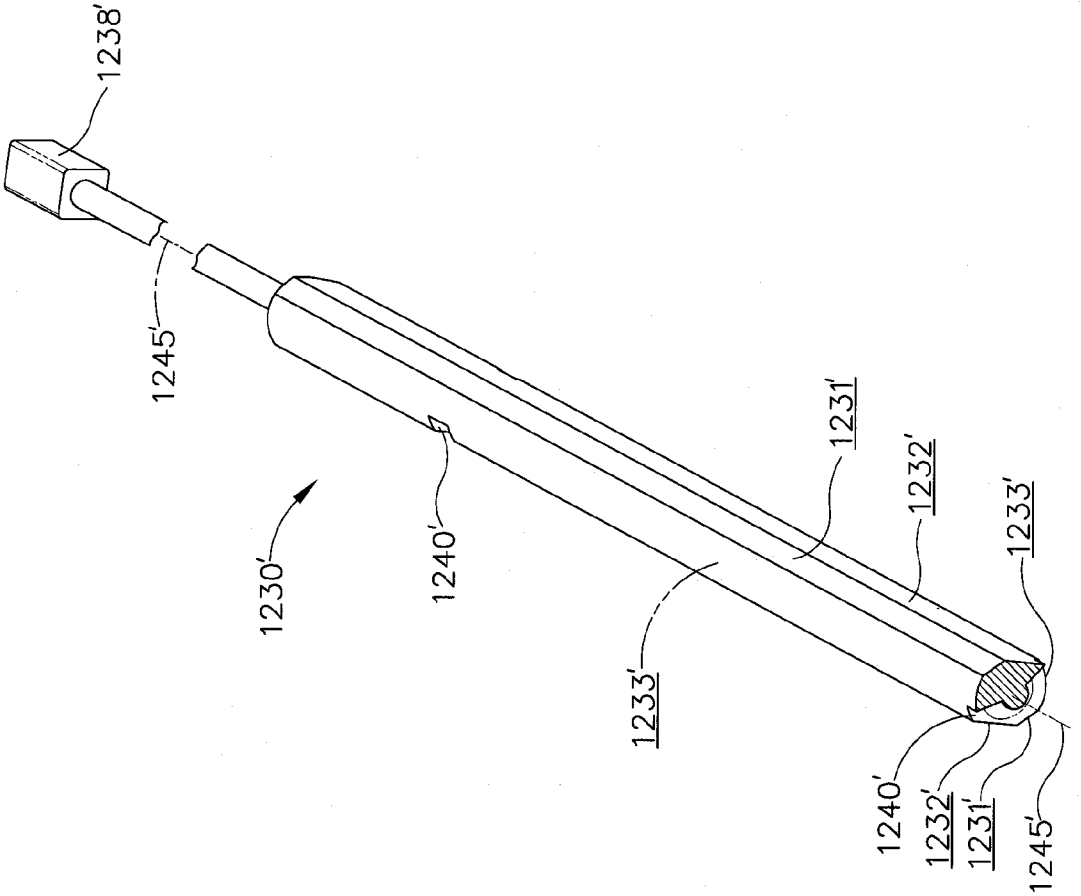


FIG. 62

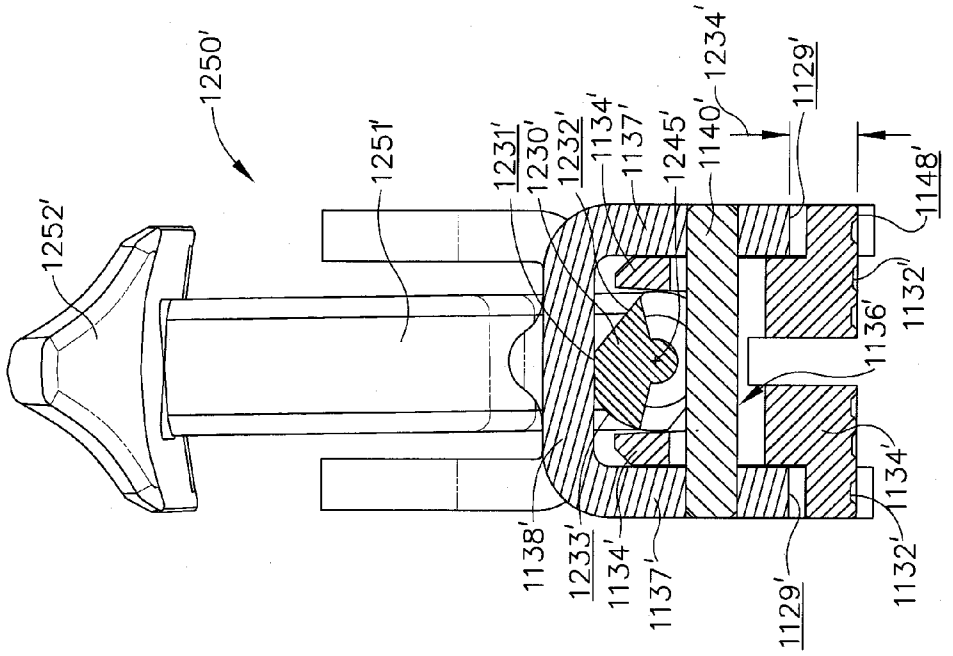
1250'
1251'
1252'
1231'
1230'
1232'
1134'
1137'
1245'
1140'
1234'
1129'
1148'
1132''
1136'
1138'
1233'
1145'

FIG. 64

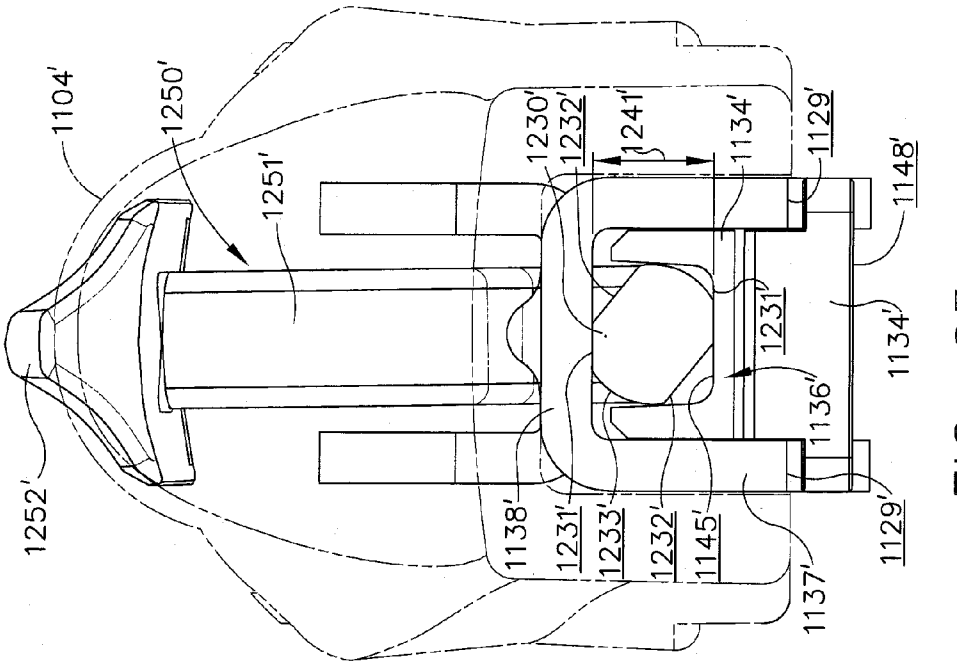
1104'
1250'
1251'
1252'
1230'
1232'
1241'
1134'
1129'
1148'
1231'
1136''
1138'
1233'
1145'
1137'

FIG. 63

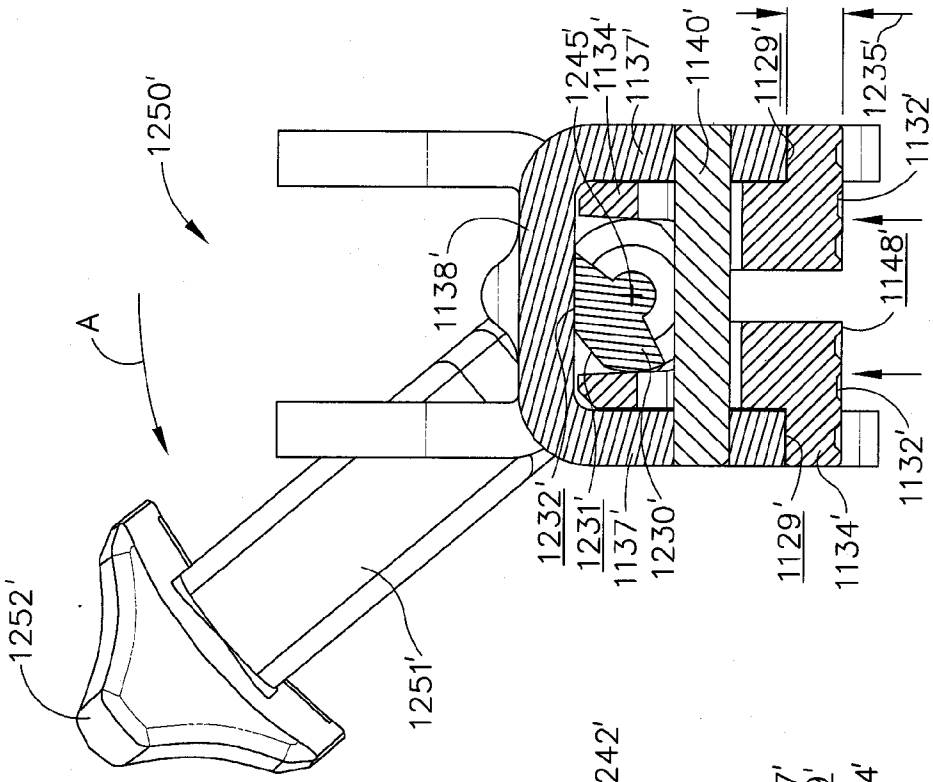
1250'
A
1252'
1251'
1138'
1245'
1134'
1137'
1140'
1129'
1235'
1132'
1148'
1132'
1232'
1231'
1137'
1230'
1129'
1134'

FIG. 66

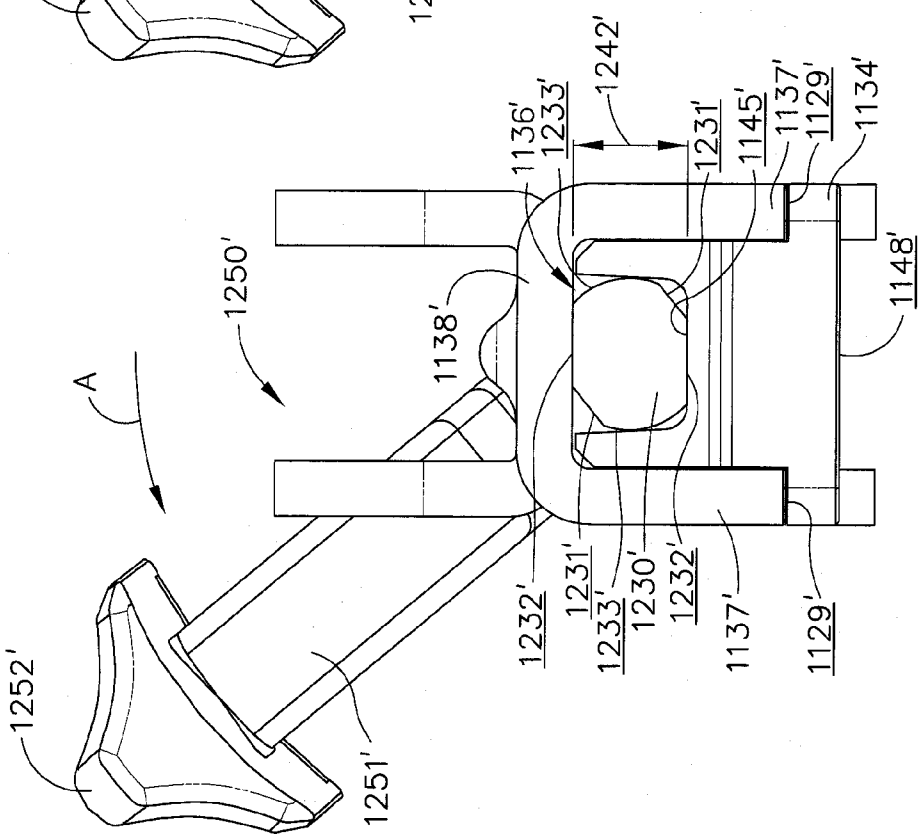
1250'
A
1252'
1251'
1138'
1136'
1233'
1242'
1231'
1145'
1137'
1129'
1134'
1148'
1232'
1231'
1233'
1230'
1232'
1137'
1129'

FIG. 65

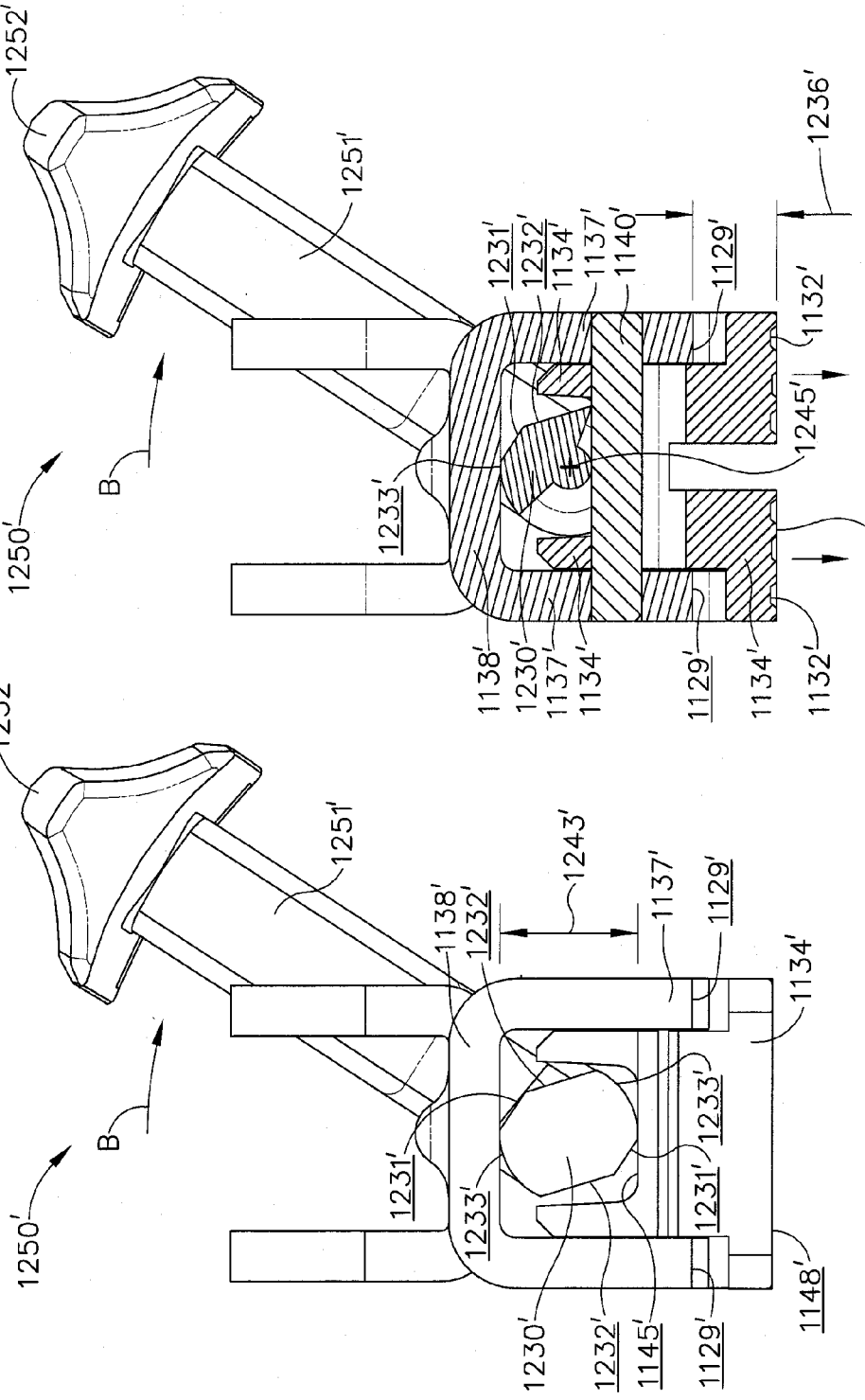
1252'
1251'
1250'
B
1231'
1232'
1134'
1137'
1140'
1129'
1236'
1132'
1245'
1233'
1148'
1138'
1230'
1137'
1134'
1129'
1134'
1132'
1252'
1251'
1250'
B
1243'
1138'
1232'
1137'
1129'
1134'
1231'
1233'
1231'
1233'
1148'
1230'
1232'
1145'
1129'

FIG. 68

FIG. 67

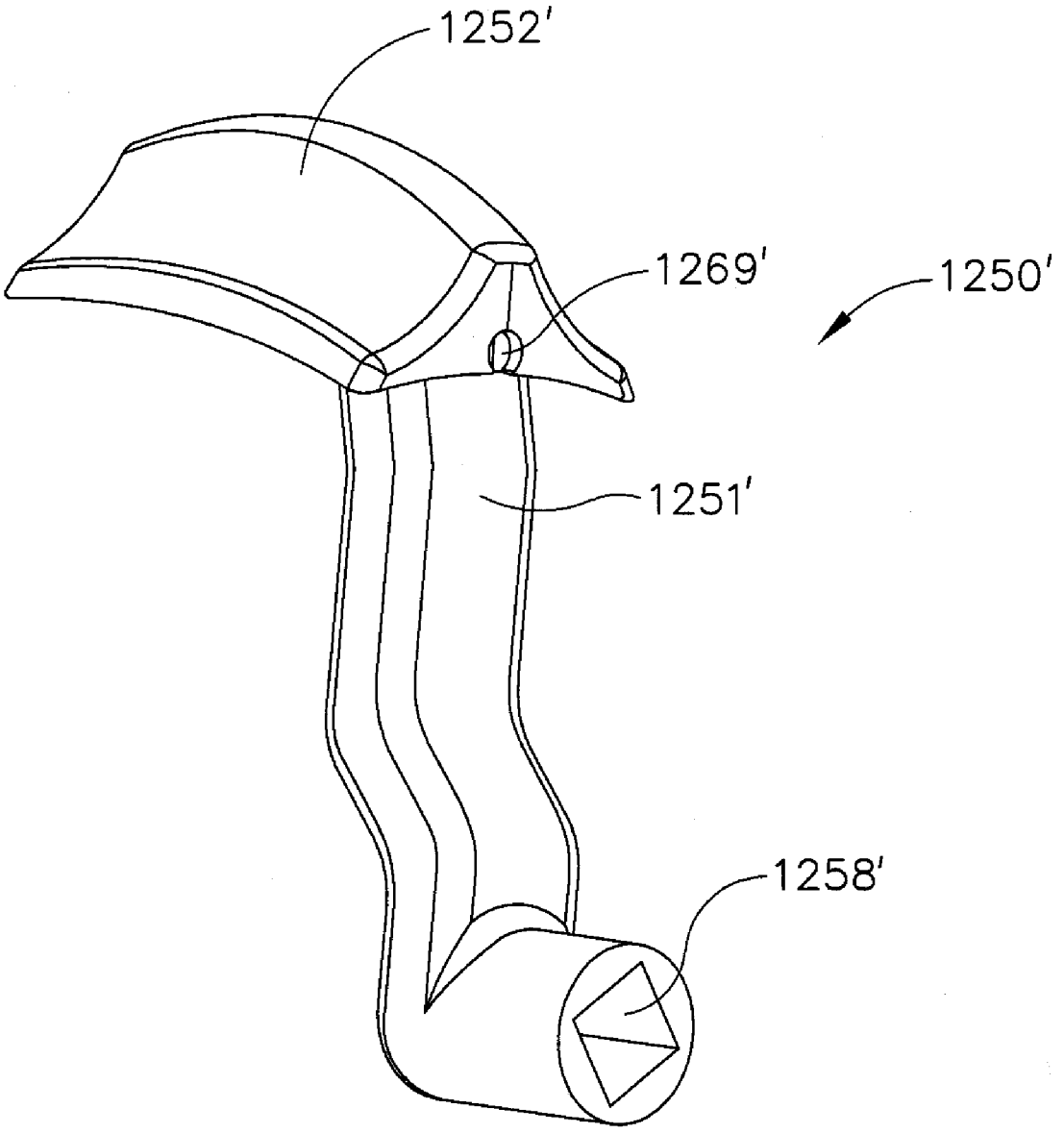


FIG. 69

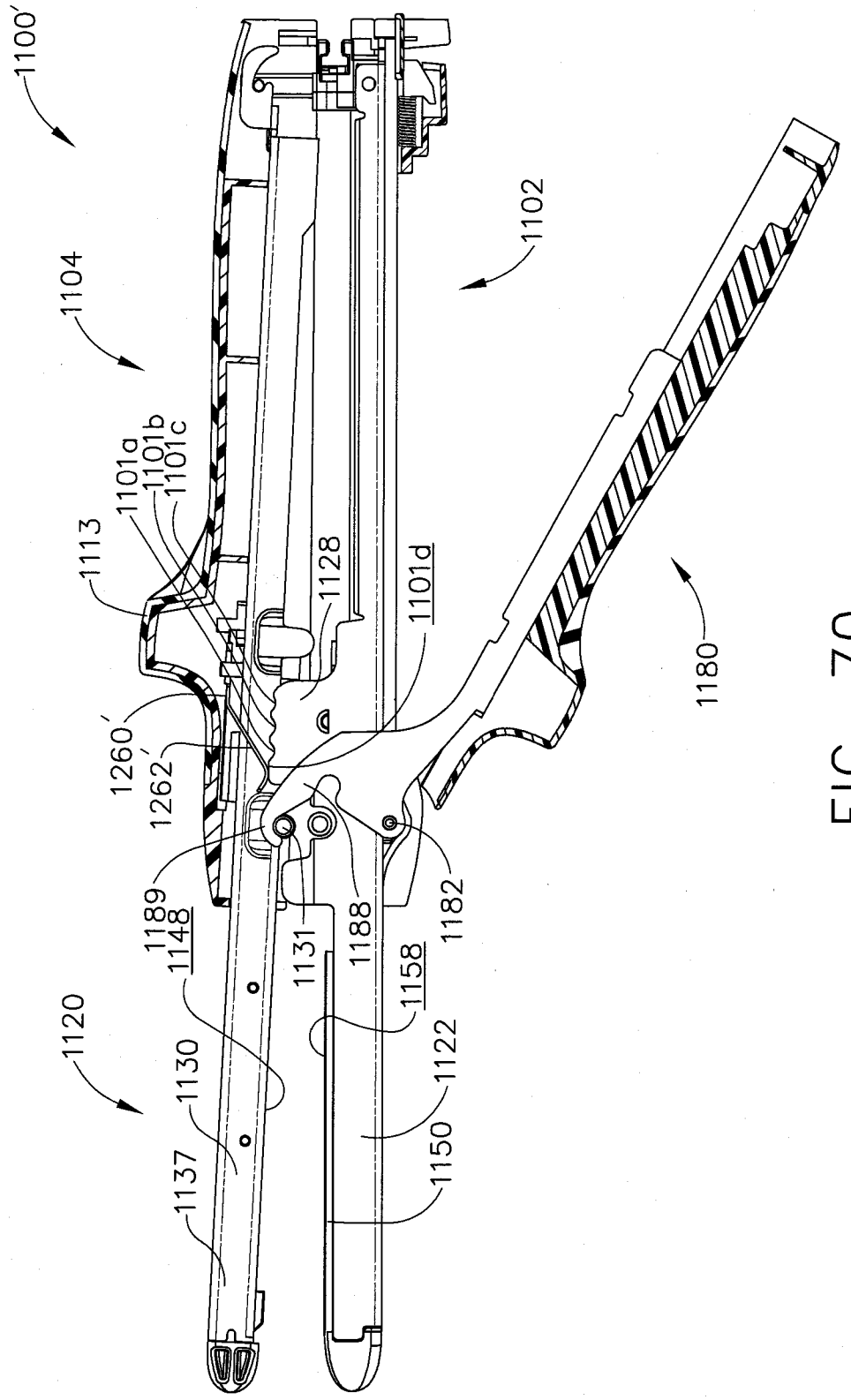
1100'
1104
1102
1101a
1101b
1101c
1113
1128
1101d
1180
1260'
1262'
1189
1148
1131
1188
1158
1182
1120
1130
1122
1137
1150

FIG. 70

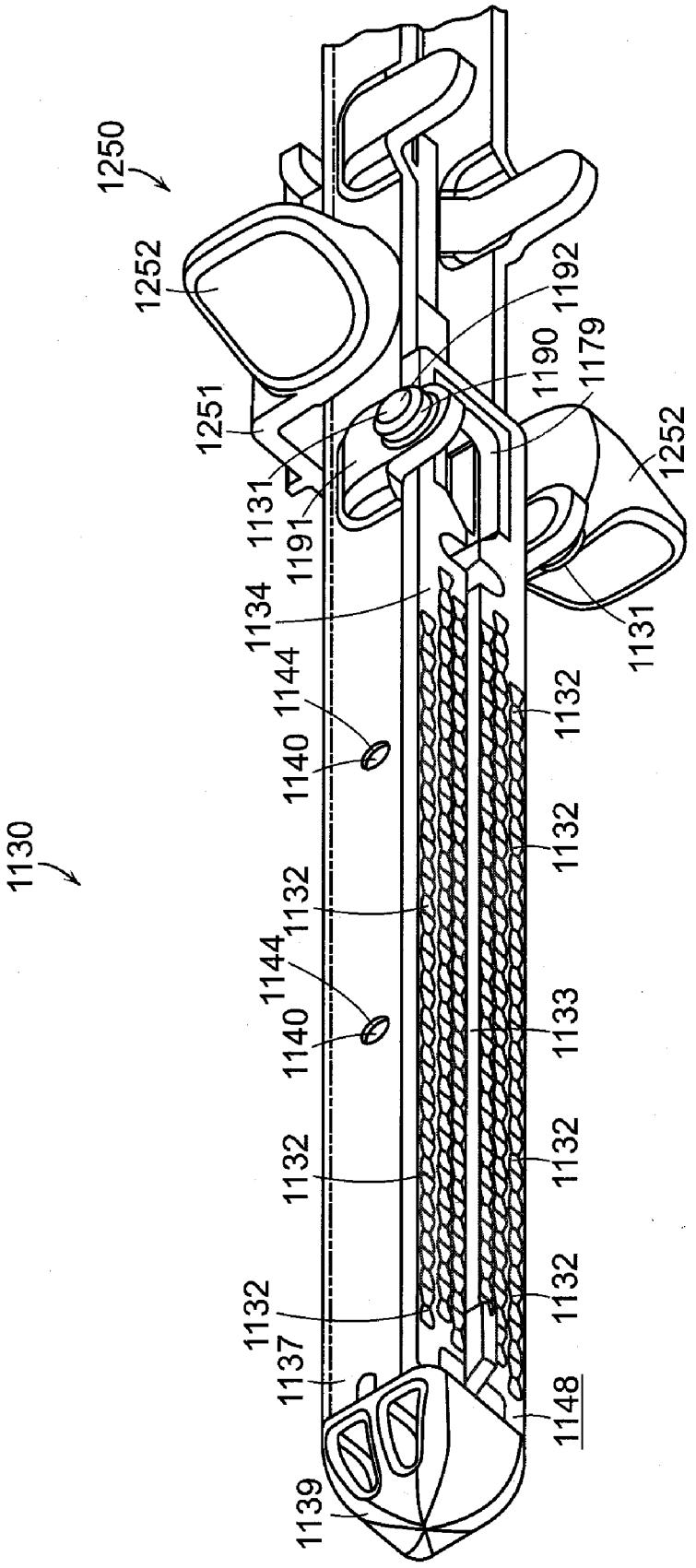
1250
1252
1251
1131
1191
1192
1190
1179
1252
1131
1134
1144
1140
1132
1132
1144
1140
1132
1133
1132
1132
1132
1137
1148
1139
1130

FIG. 71

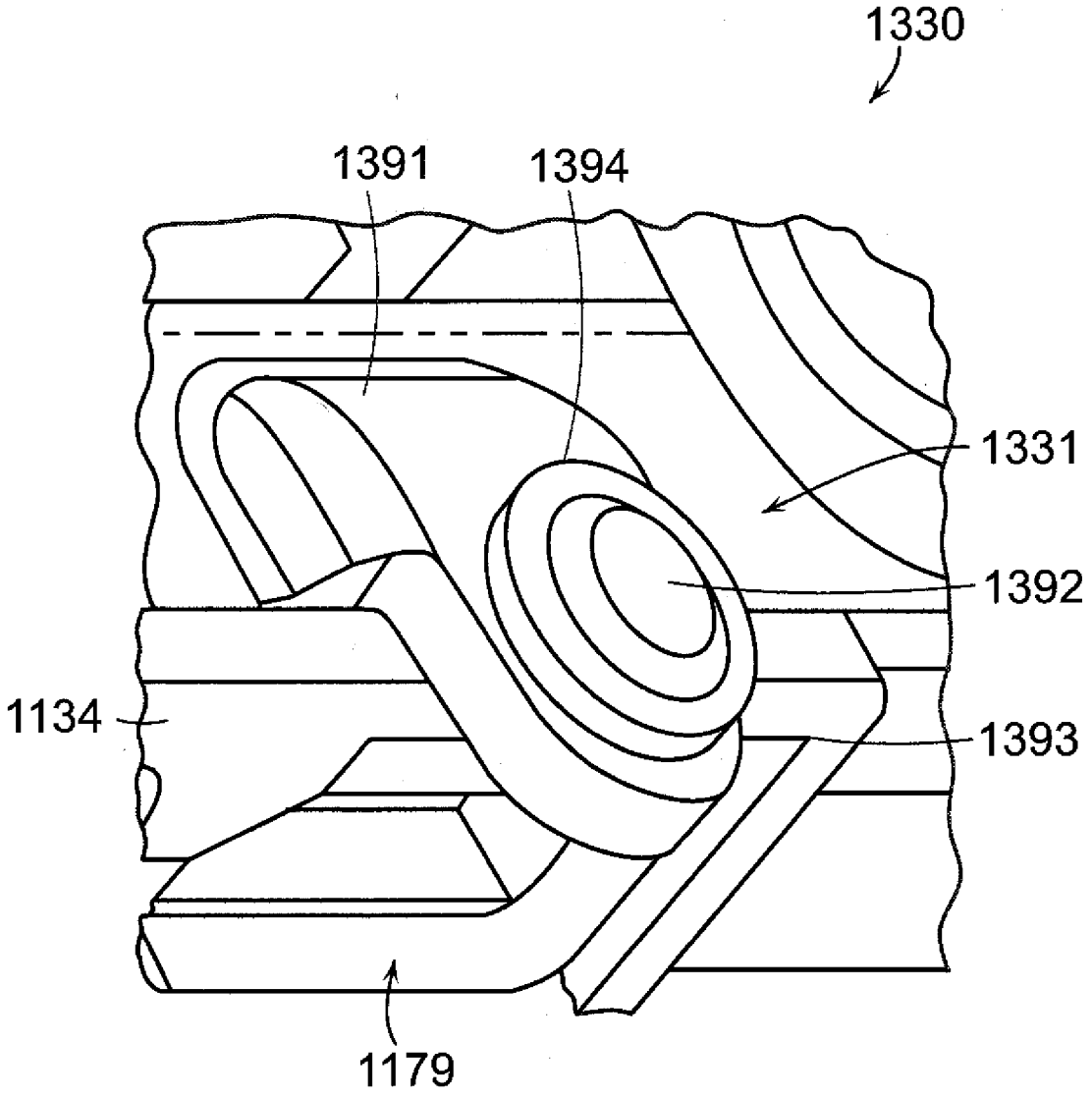


FIG. 72

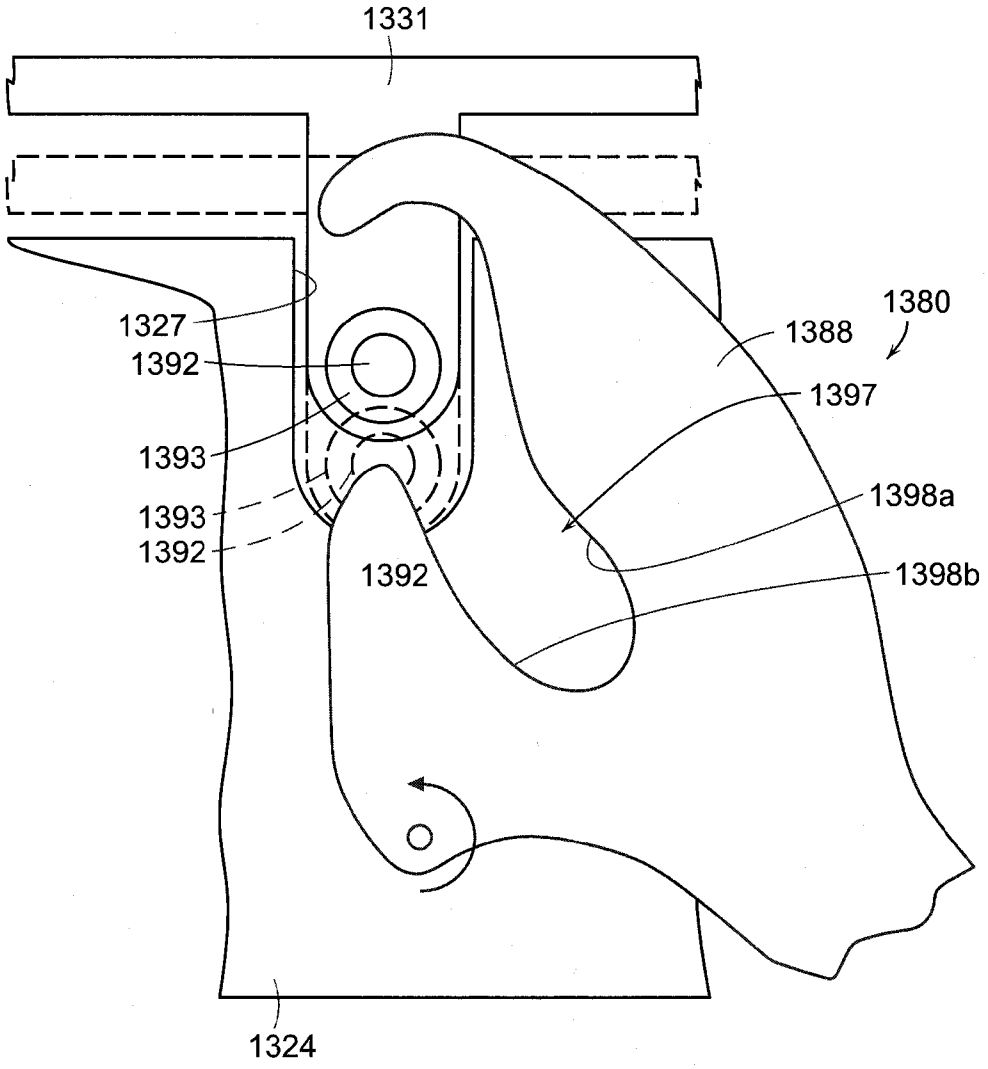
1331
1327
1392
1393
1393
1392
1392
1380
1388
1397
1398a
1398b
1324

FIG. 73

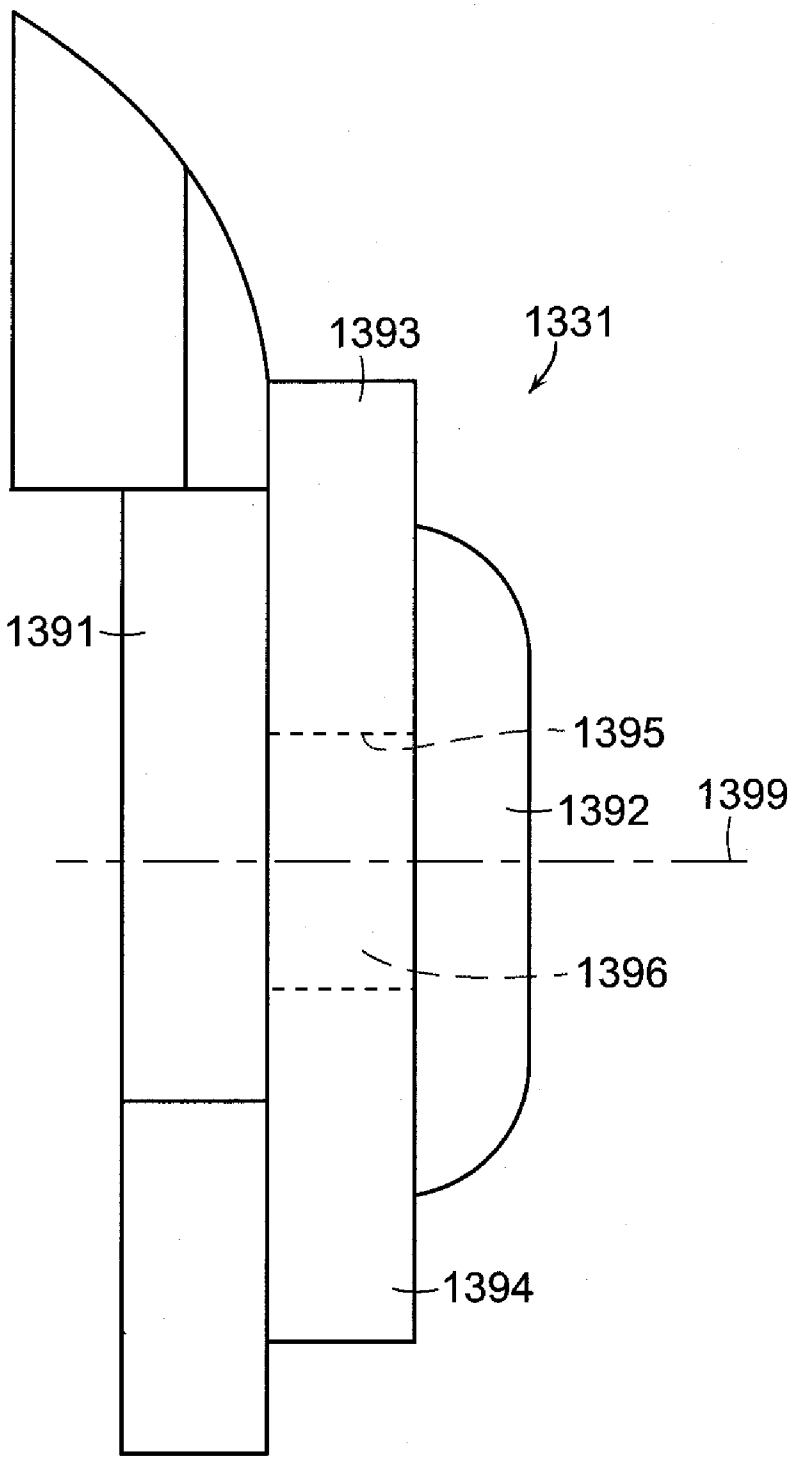


FIG. 74

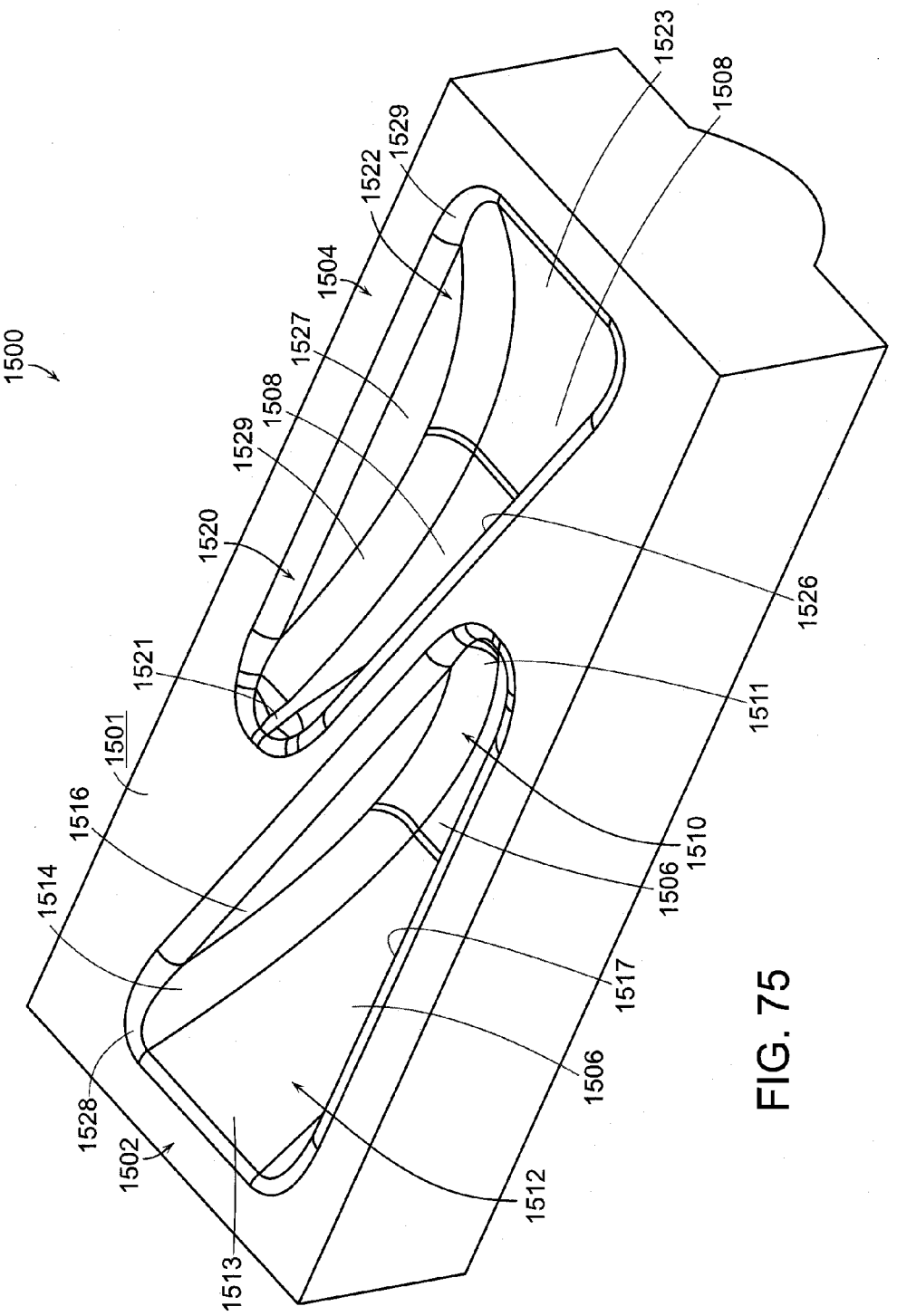
1500
1501
1502
1504
1506
1508
1510
1511
1512
1513
1514
1516
1517
1520
1521
1522
1523
1526
1527
1528
1529

FIG. 75

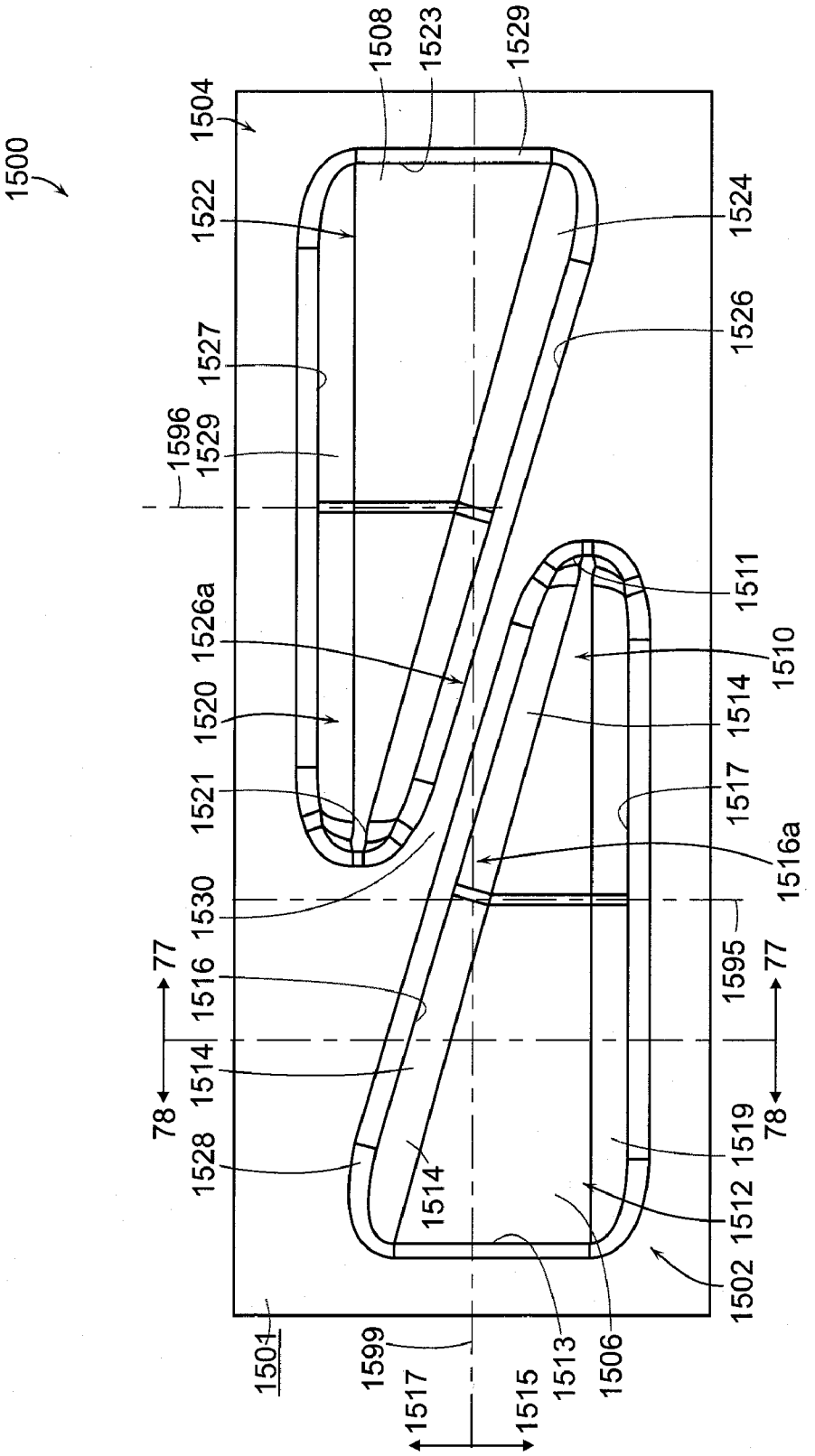
1500
1504
1508
1523
1529
1522
1524
1527
1526
1596
1529
1526a
1511
1510
1520
1514
1521
1517
1516a
1530
1595
77
1516
1514
78
1528
1519
1512
1502
1501
1599
1517
1515
1513
1506

FIG. 76

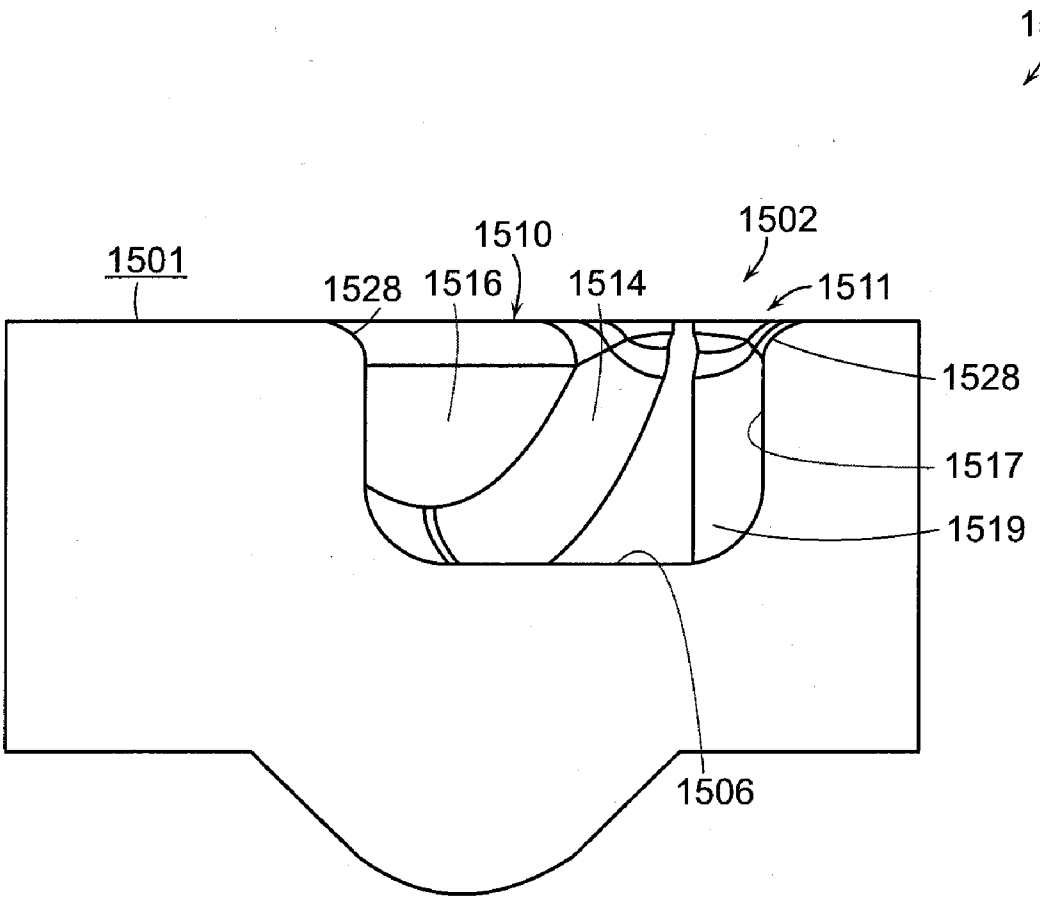


FIG. 77

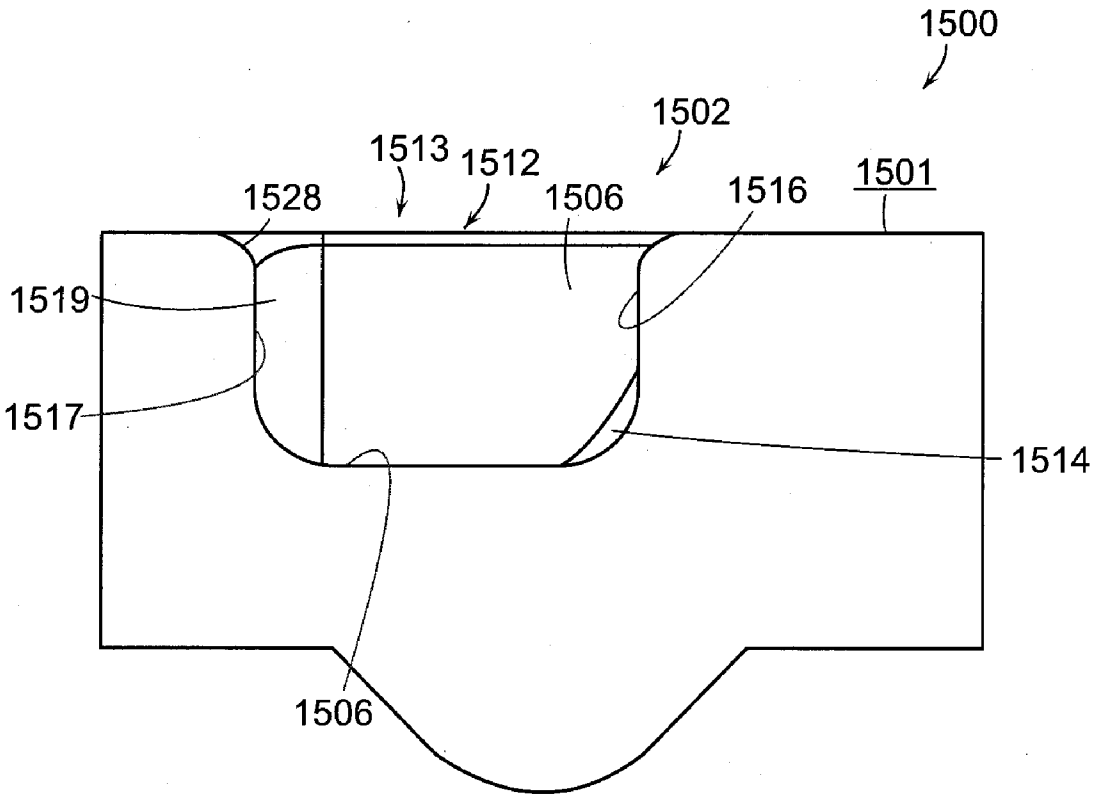


FIG. 78

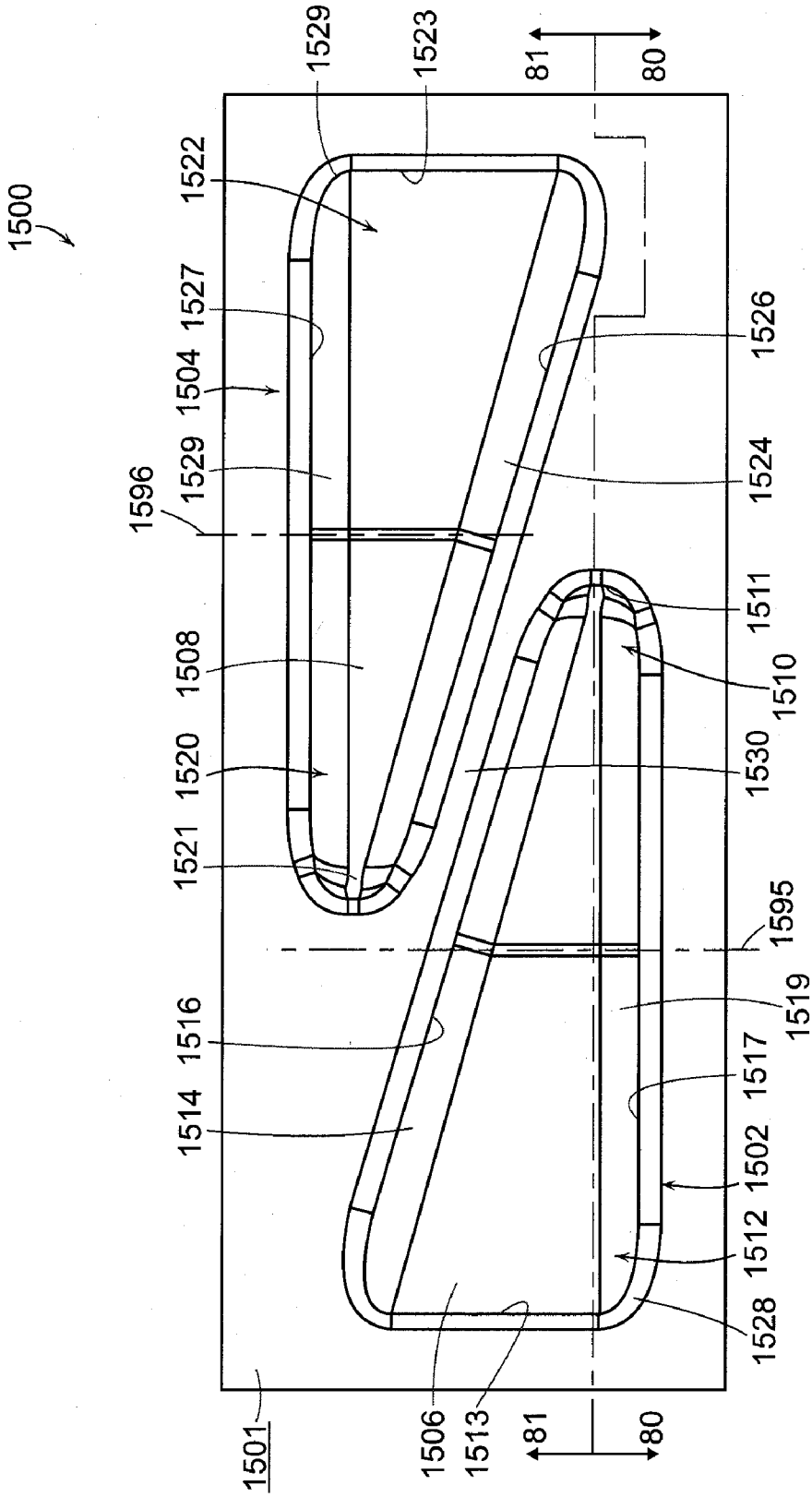
1500
1529
1523
81
80
1522
1527
1504
1529
1596
1526
1524
1511
1510
1508
1520
1530
1521
1595
1519
1516
1517
1514
1502
1512
1528
1501
1506
1513
81
80

FIG. 79

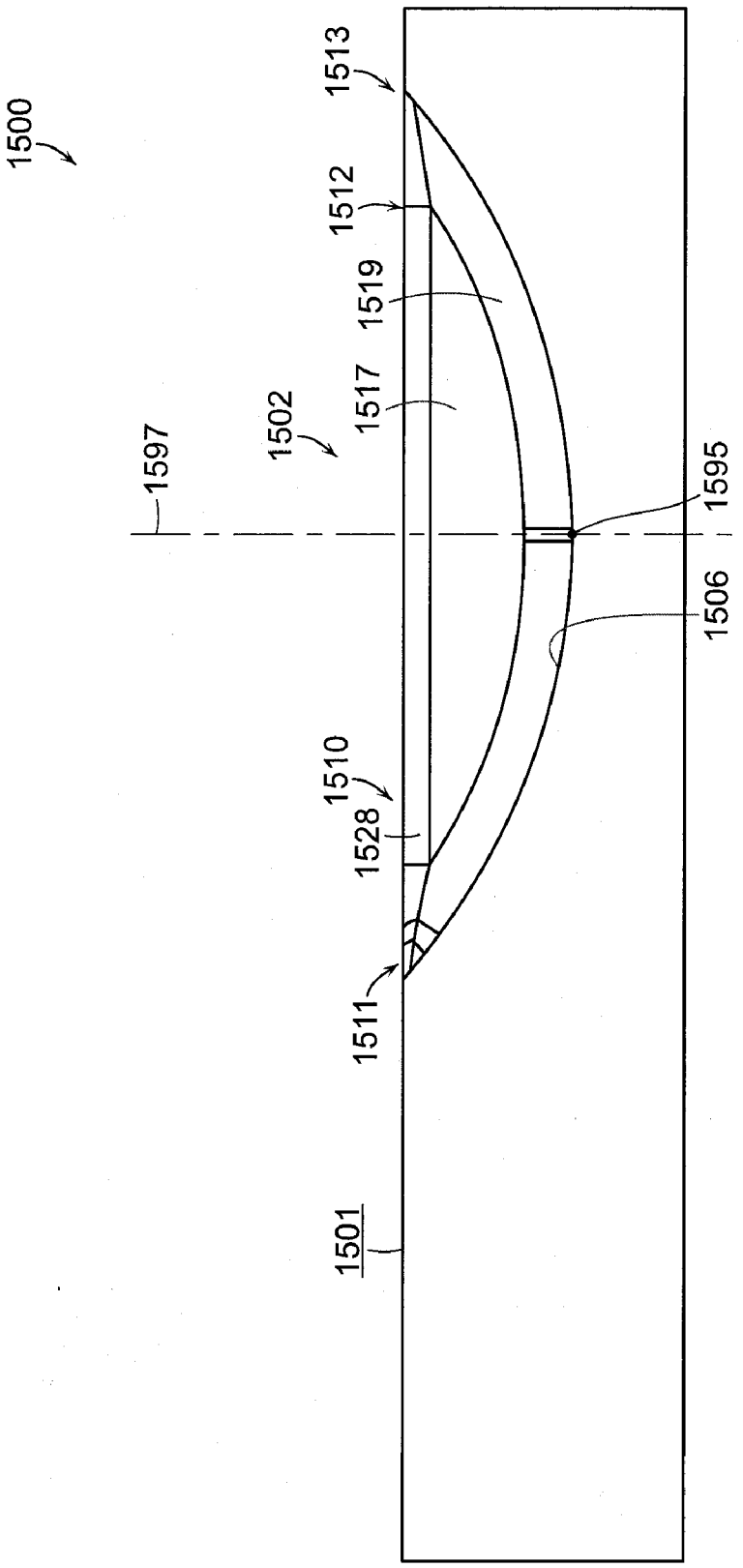
1500
1513
1512
1519
1517
1502
1597
1595
1506
1510
1528
1511
1501

FIG. 80

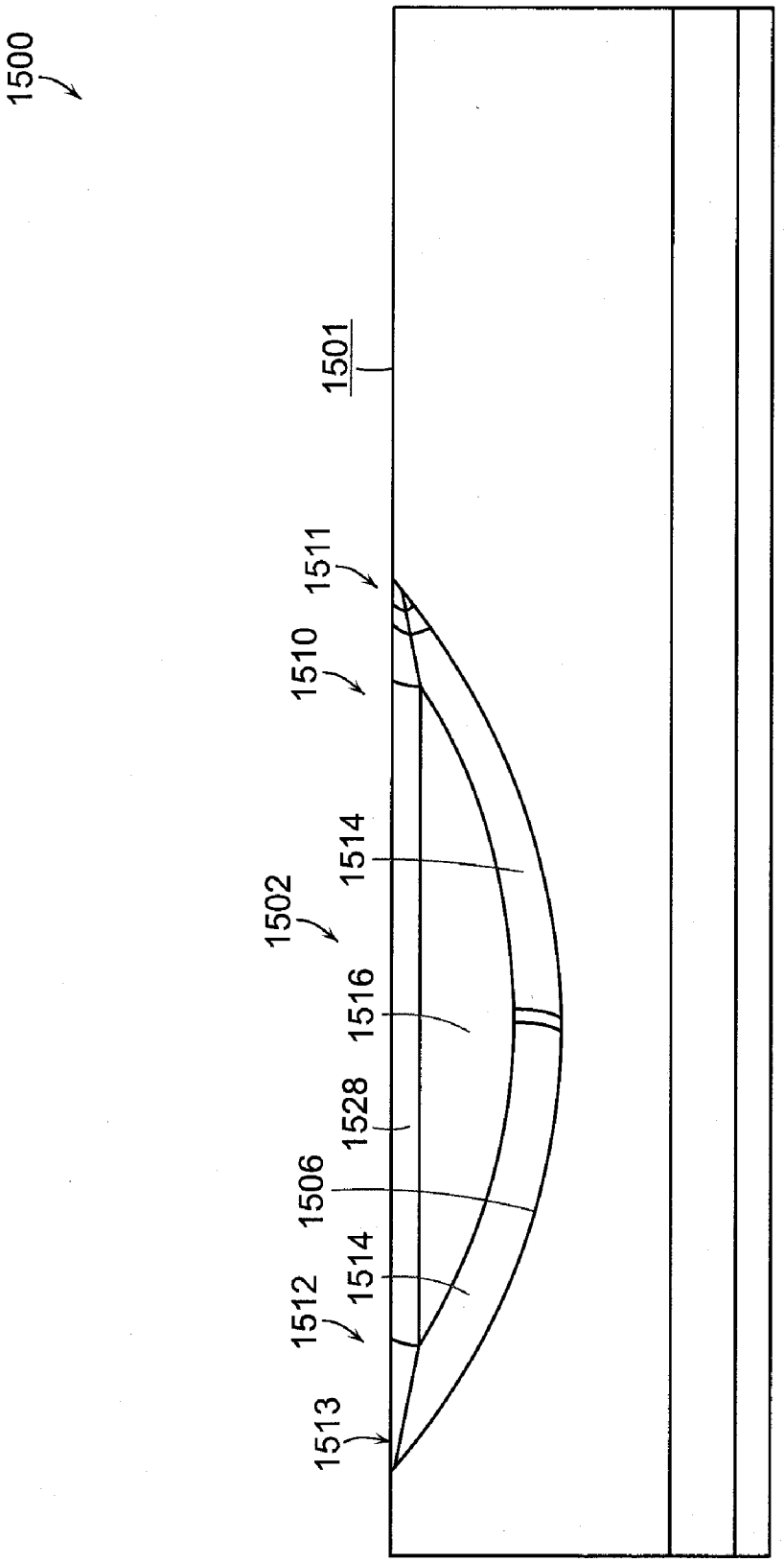


FIG. 81

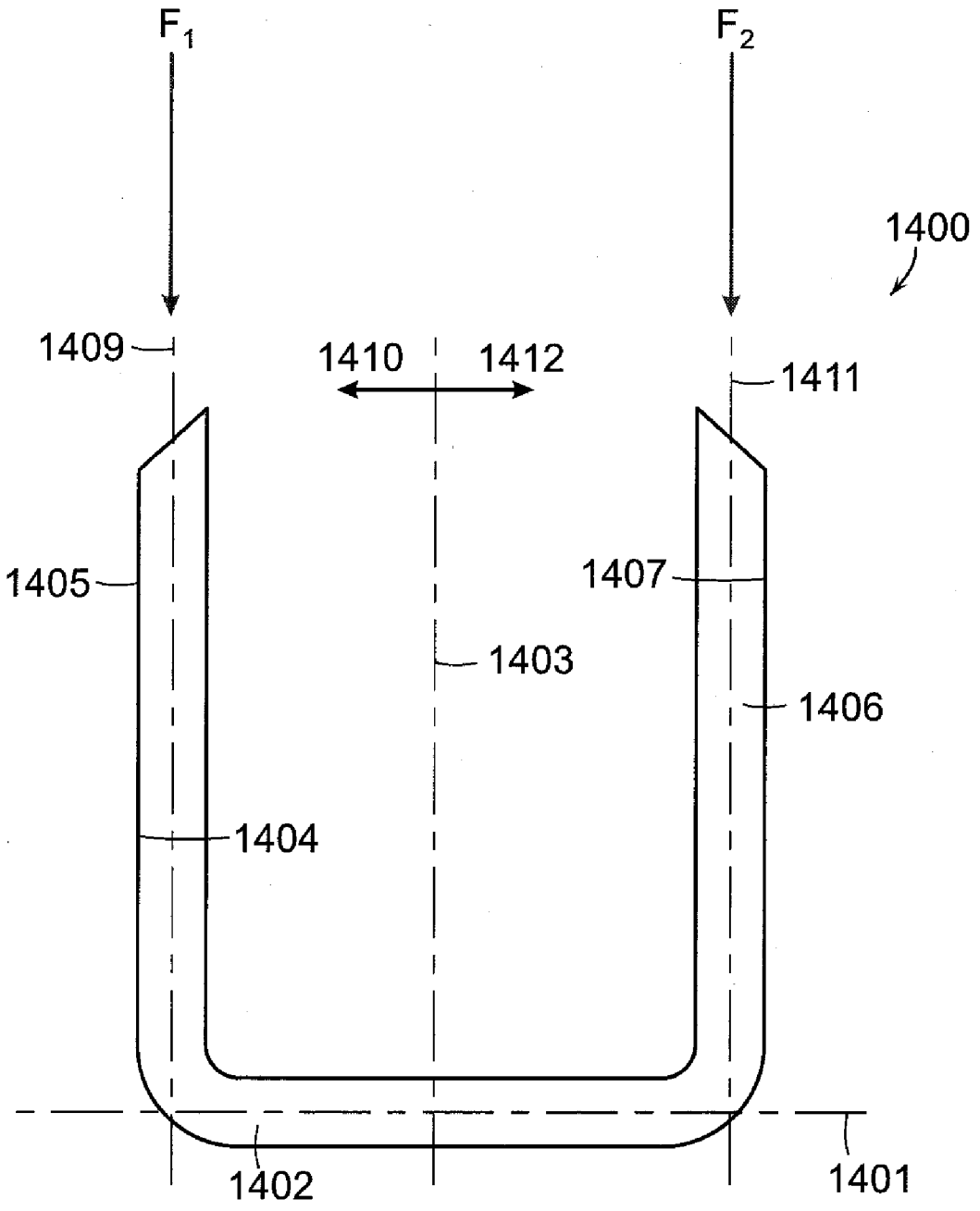
F1
F2
1400
1409
1410
1412
1411
1405
1407
1403
1406
1404
1402
1401

FIG. 82

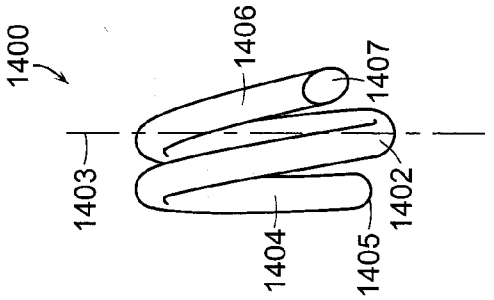


FIG. 84

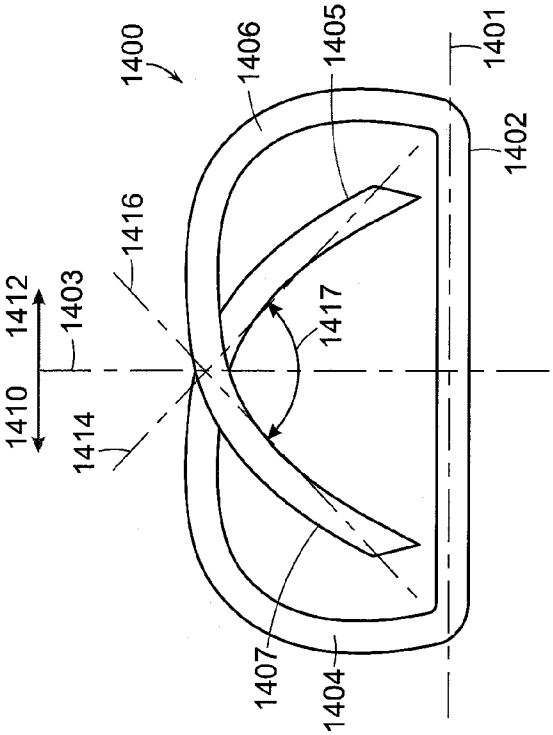


FIG. 83

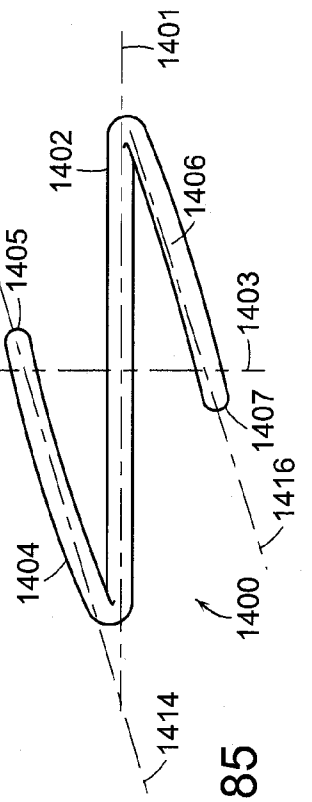


FIG. 85

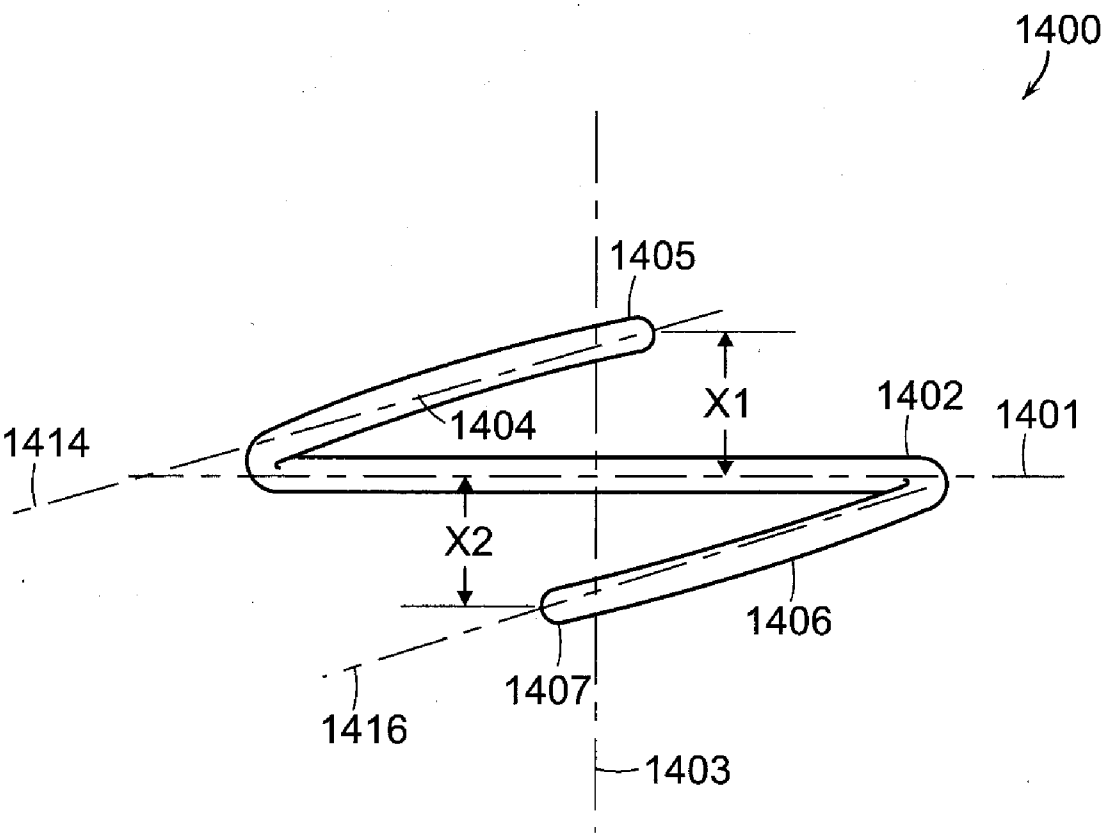


FIG. 85A

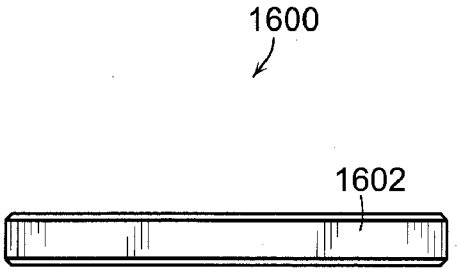


FIG. 87

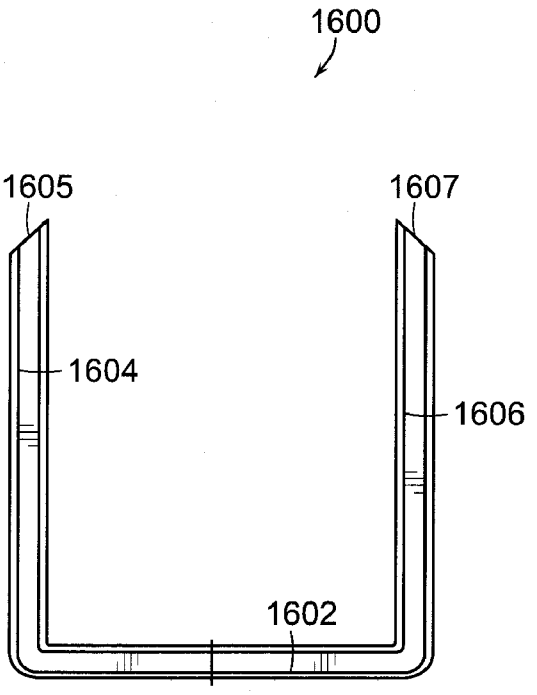


FIG. 86

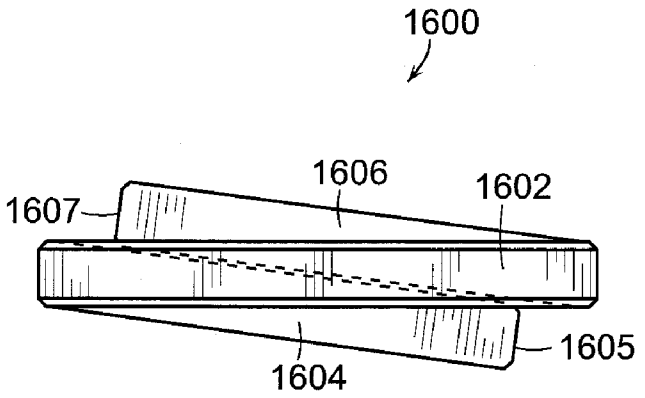


FIG. 88

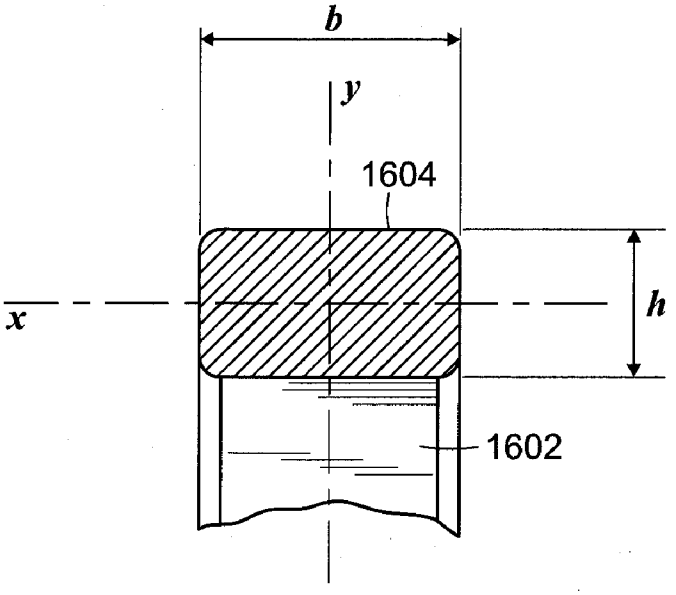


FIG. 89

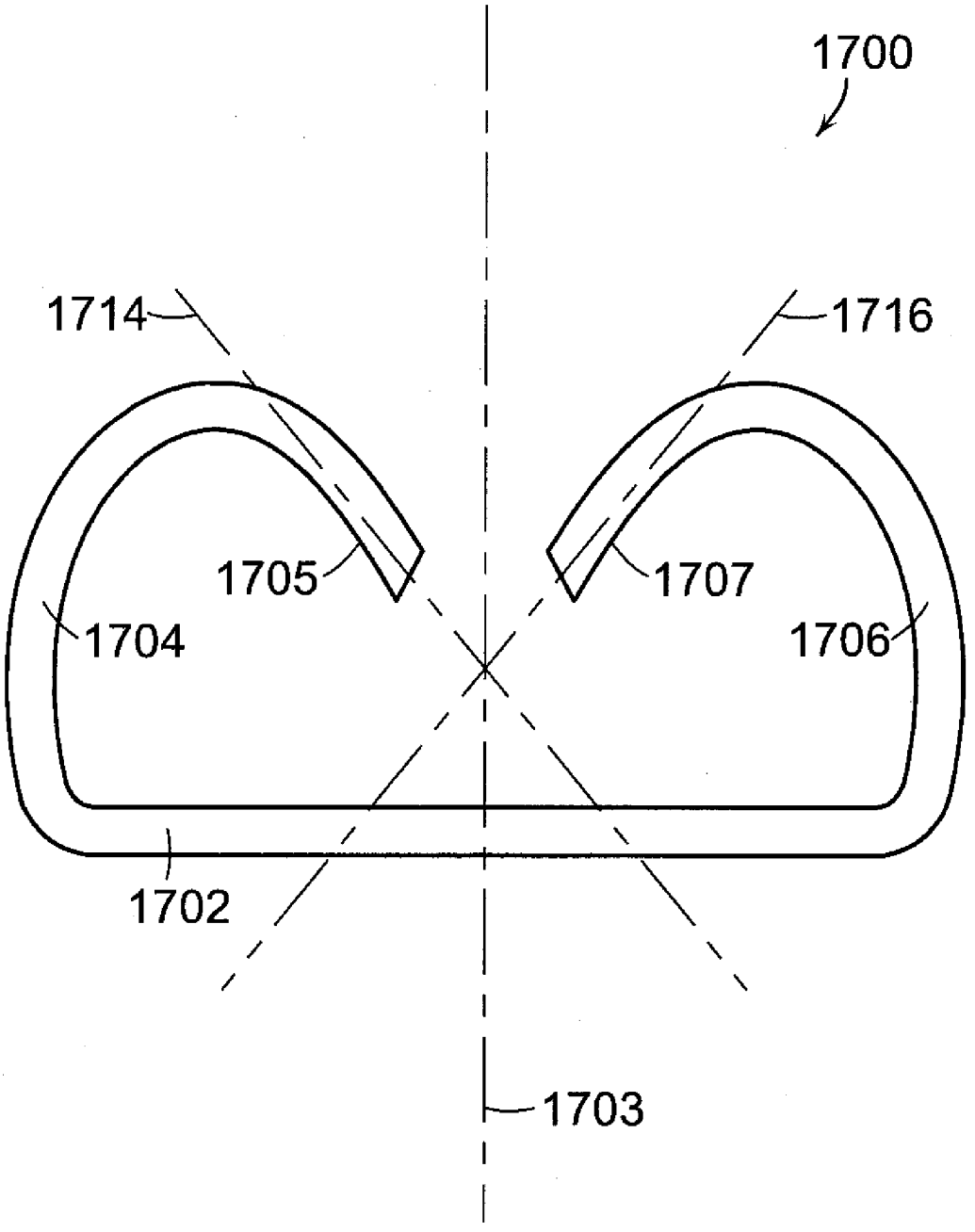


FIG. 90

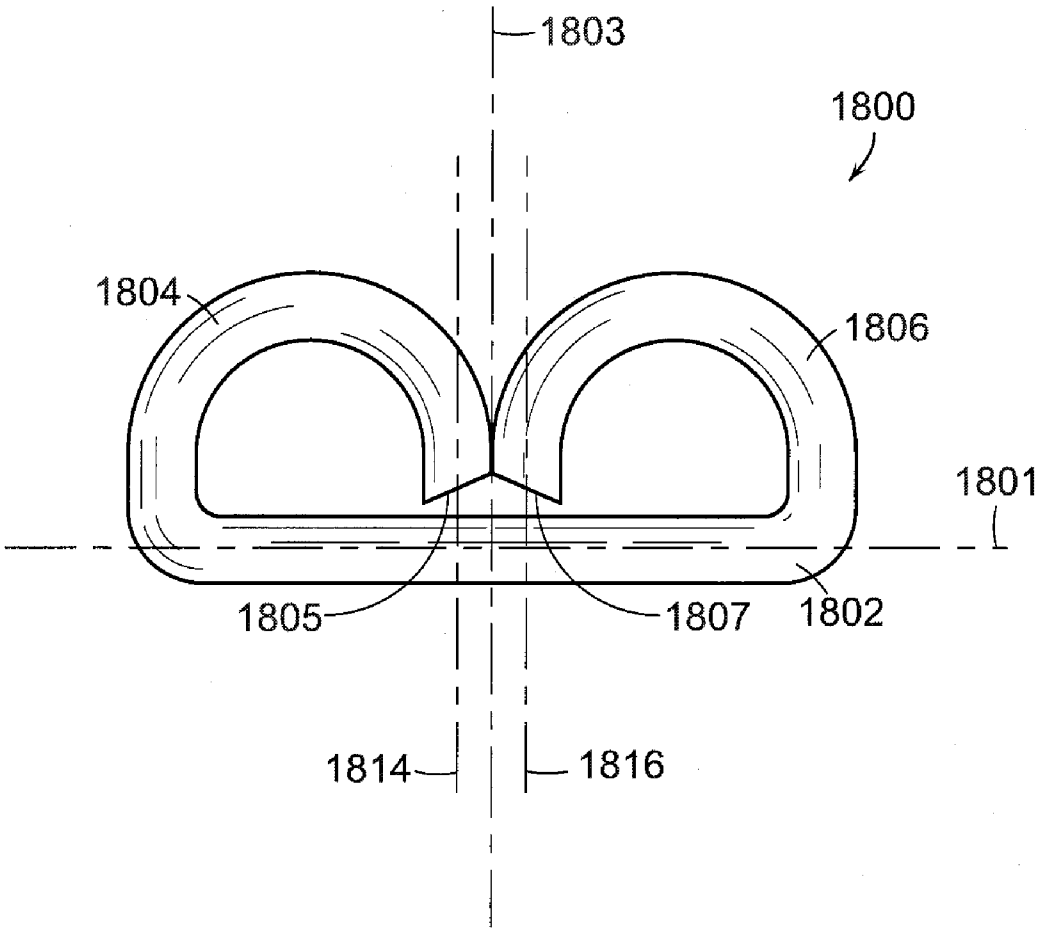


FIG. 91

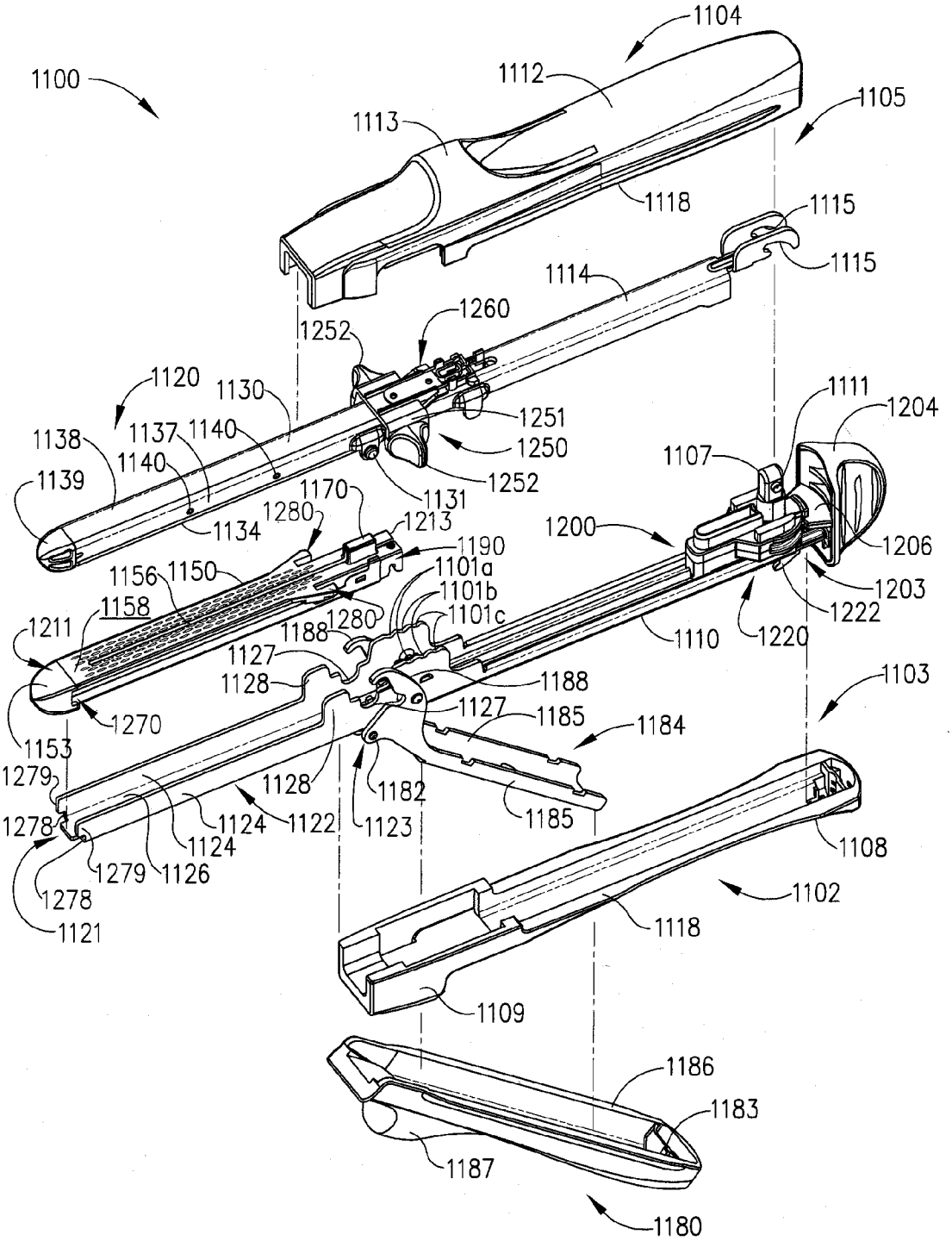
1100
1104
1112
1105
1113
1118
1115
1115
1114
1260
1252
1120
1130
1251
1250
1111
1204
1138
1137
1140
1140
1107
1139
1252
1131
1170
1280
1213
1134
1200
1206
1190
1156
1150
1101a
1101b
1203
1158
1280
1101c
1222
1211
1188
1110
1220
1127
1128
1188
1103
1270
1127
1185
1184
1153
1279
1128
1182
1185
1278
1124
1122
1123
1124
1108
1279
1126
1278
1102
1121
1118
1109
1186
1183
1187
1180

FIG. 92

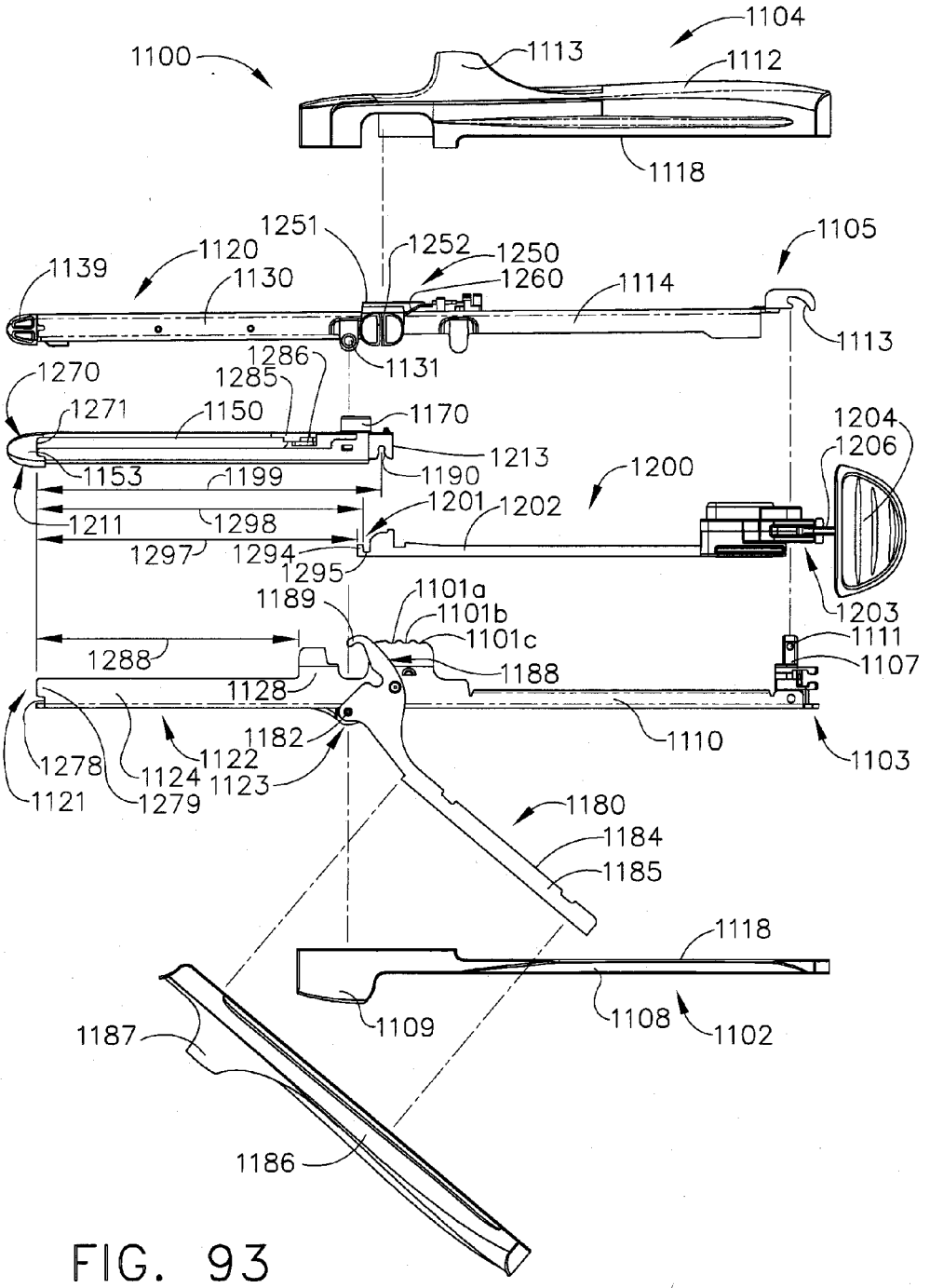
1104
1100
1113
1112
1118
1251
1252
1250
1105
1120
1139
1130
1260
1114
1113
1286
1131
1270
1285
1271
1150
1170
1204
1206
1213
1153
1199
1190
1200
1201
1202
1211
1298
1297
1294
1295
1203
1189
1101a
1101b
1101c
1111
1288
1188
1107
1128
1182
1110
1103
1278
1122
1124
1123
1121
1279
1180
1184
1185
1118
1187
1109
1108
1102
1186

FIG. 93

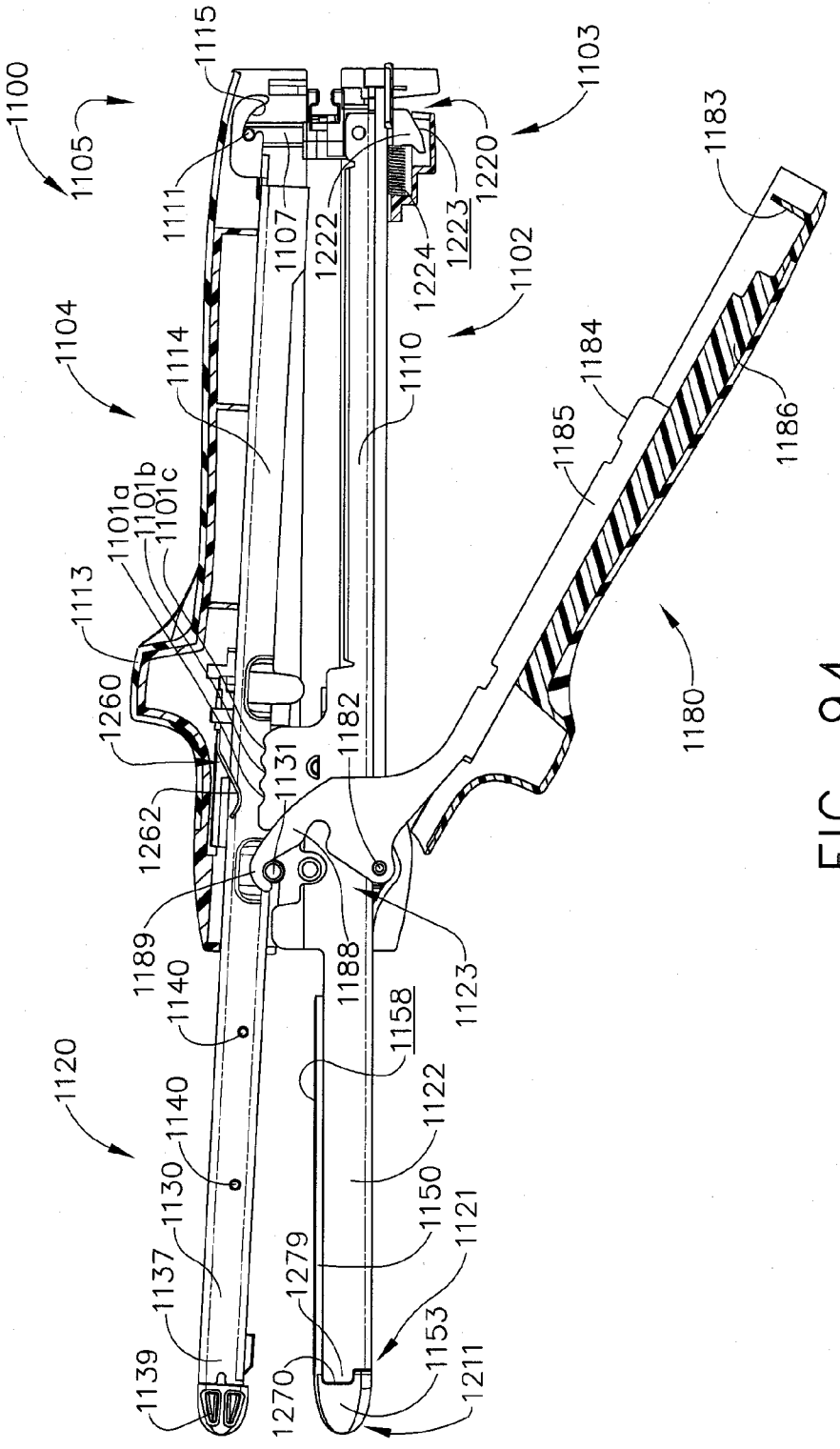
1100
1105
1115
1111
1107
1222
1224
1223
1220
1103
1183
1102
1104
1114
1110
1184
1185
1186
1101a
1101b
1101c
1113
1260
1182
1131
1180
1262
1189
1140
1188
1123
1158
1120
1140
1122
1130
1150
1121
1137
1279
1153
1139
1270
1211

FIG. 94

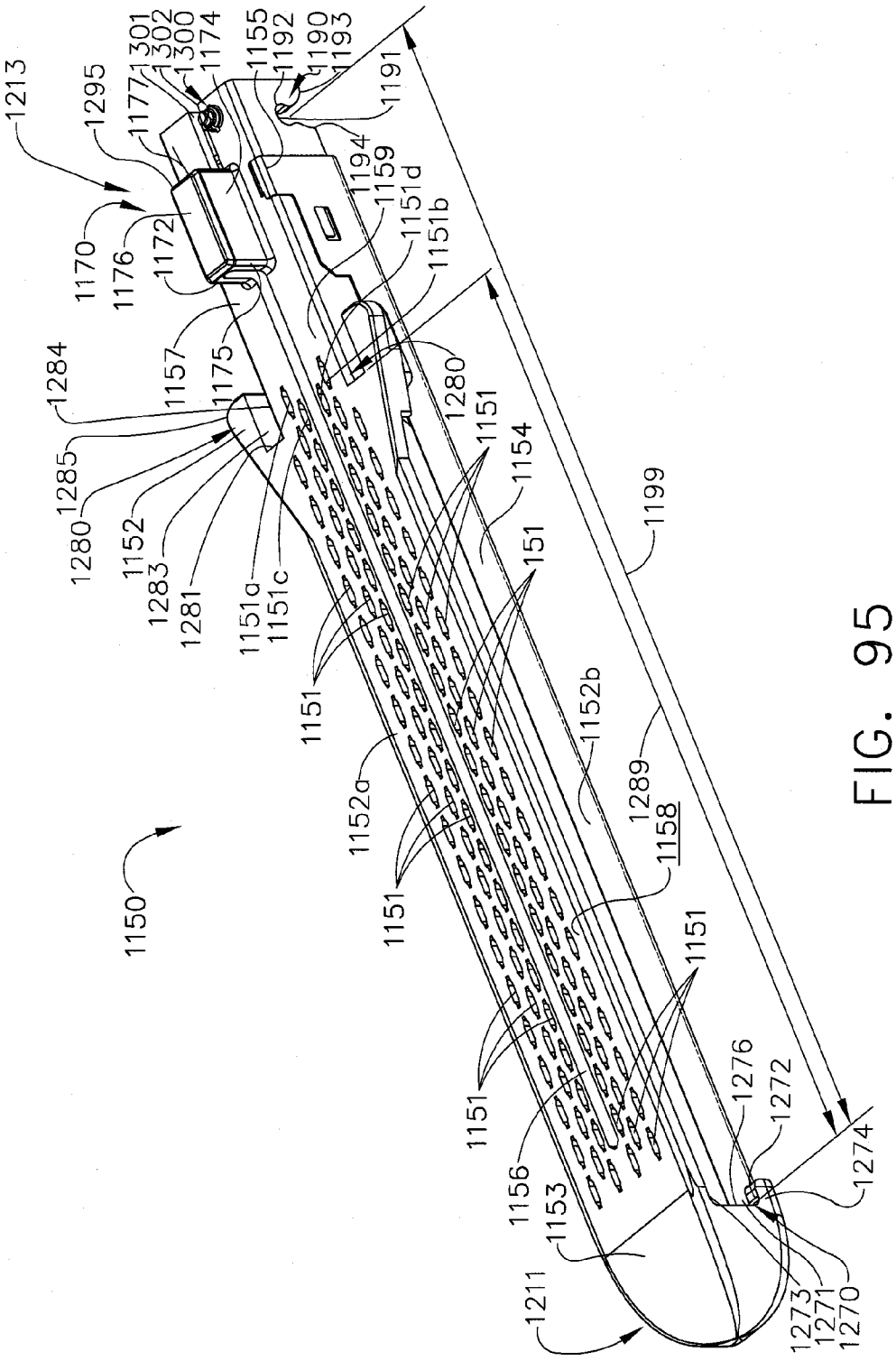
1213
1295
1177
1301
1302
1300
1174
1155
1192
1190
1193
1191
1170
1176
1172
1194
1159
1151d
1151b
1284
1157
1175
1280
1151
1154
1285
1280
1152
1283
1281
1151a
1151c
1199
151
1151
1152b
1152a
1289
1158
1150
1151
1151
1276
1272
1156
1153
1274
1211
1273
1271
1270

FIG. 95

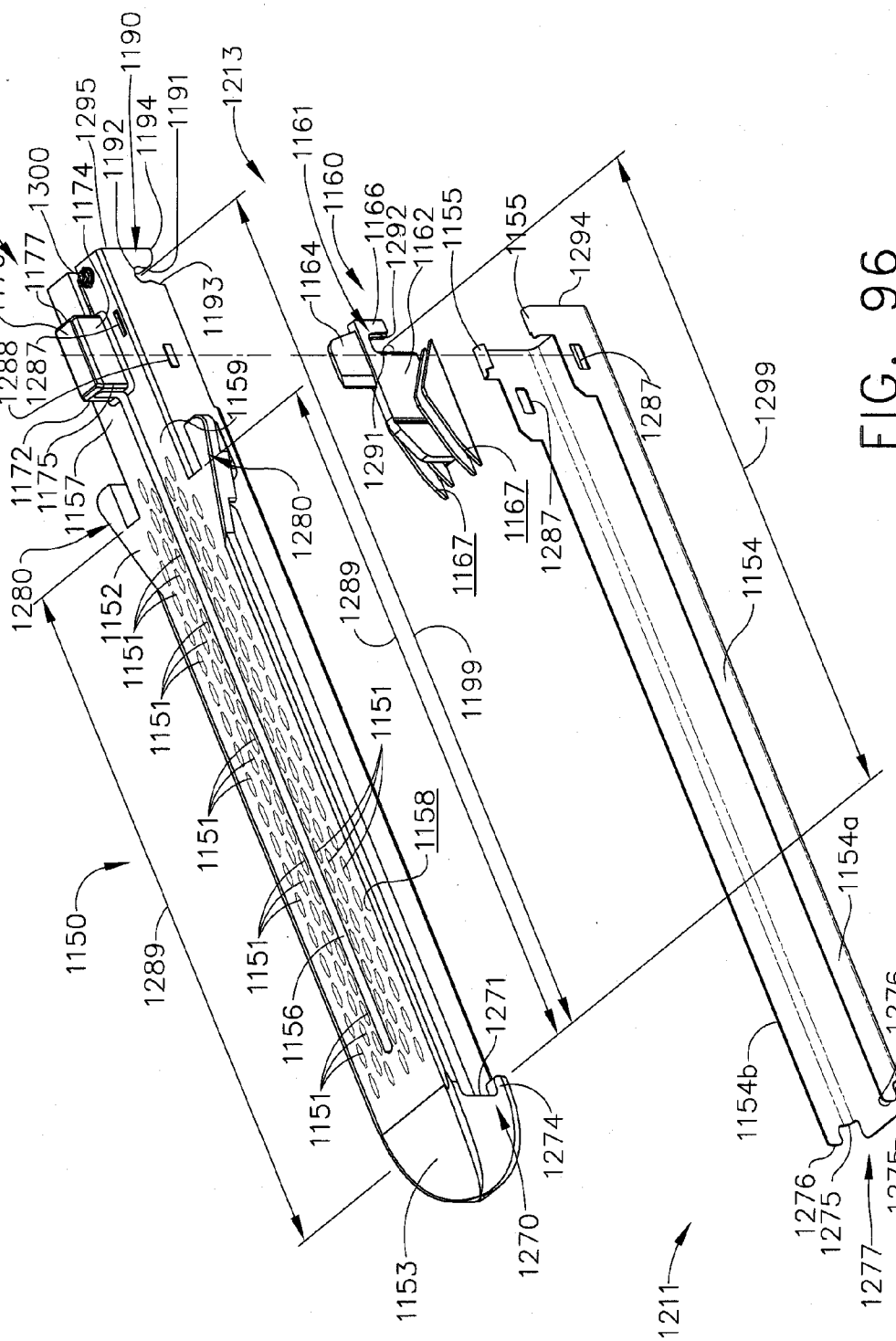
1170
1176
1177
1300
1174
1295
1192
1190
1194
1191
1213
1288
1287
1172
1175
1157
1159
1193
1280
1152
1151
1289
1199
1158
1150
1156
1271
1274
1270
1153
1211
1161
1160
1166
1292
1162
1155
1164
1291
1167
1294
1299
1154
1154a
1154b
1276
1275
1277

FIG. 96

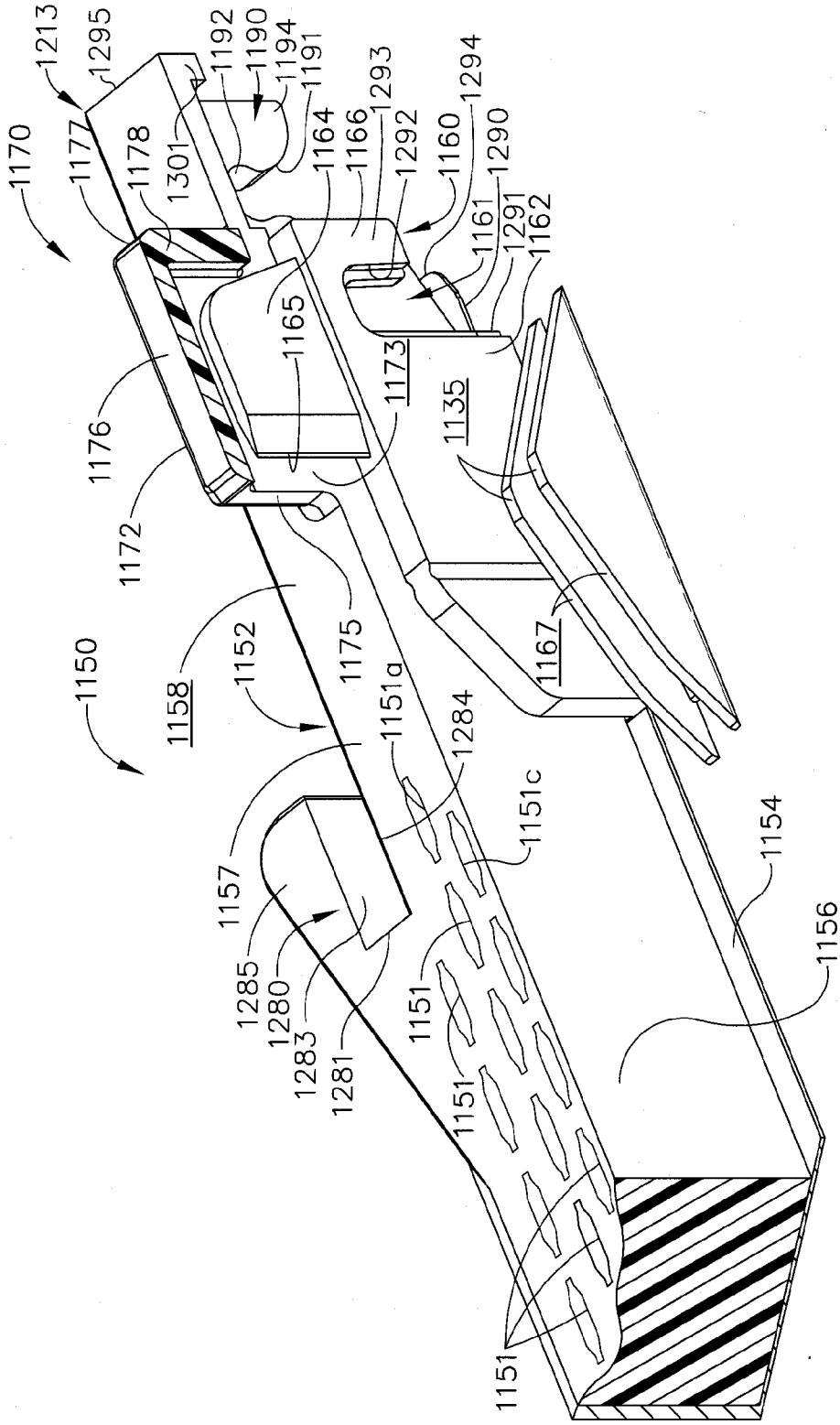
1213
1295
1192
1190
1194
1191
1293
1294
1170
1177
1178
1301
1164
1166
1292
1160
1290
1161
1291
1162
1165
1173
1135
1176
1172
1175
1167
1150
1158
1152
1151a
1284
1151c
1154
1157
1285
1280
1283
1281
1151
1156

FIG. 97

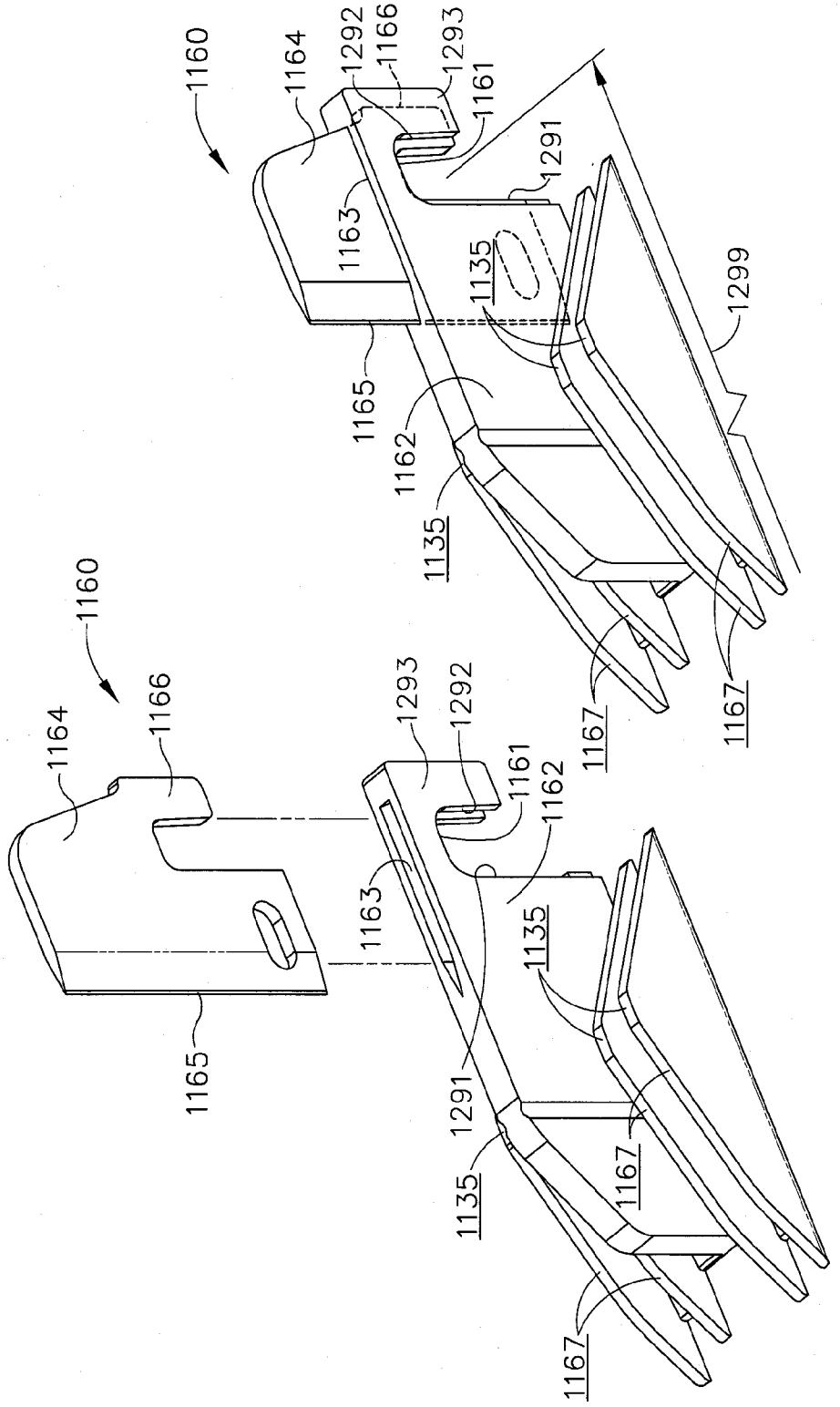
1160
1164
1292
1166
1293
1161
1291
1163
1135
1299
1165
1162
1135
1167
1167
1160
1164
1166
1293
1292
1161
1162
1163
1135
1165
1291
1135
1167
1167

FIG. 98

FIG. 99

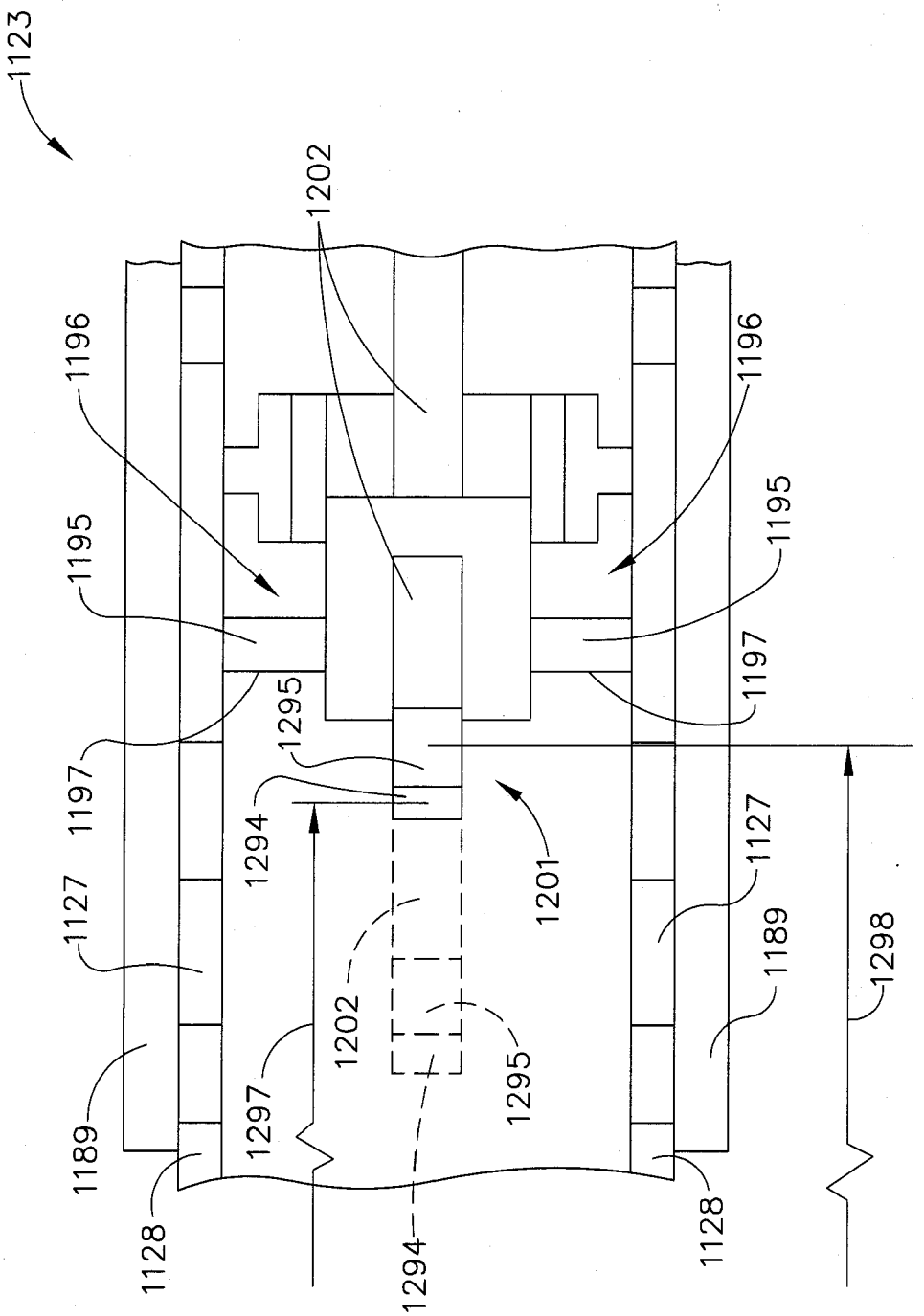
1123
1202
1196
1196
1195
1195
1197
1197
1295
1294
1127
1127
1201
1189
1189
1202
1297
1295
1298
1128
1128
1294

FIG. 100

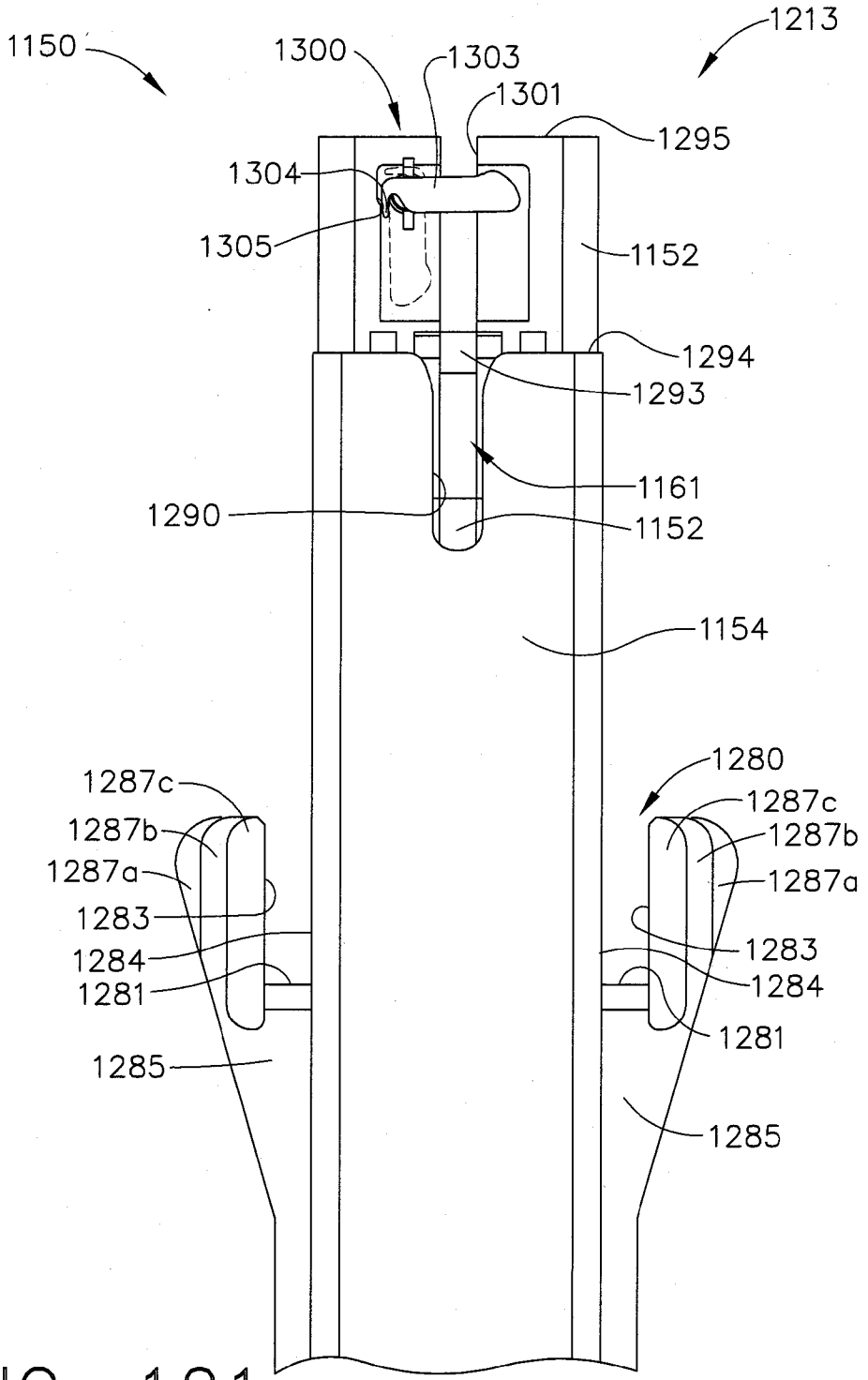
1150
1300
1303
1301
1213
1295
1304
1305
1152
1294
1293
1161
1290
1152
1154
1280
1287c
1287b
1287a
1283
1284
1281
1285
1287c
1287b
1287a
1283
1284
1281
1285

FIG. 101

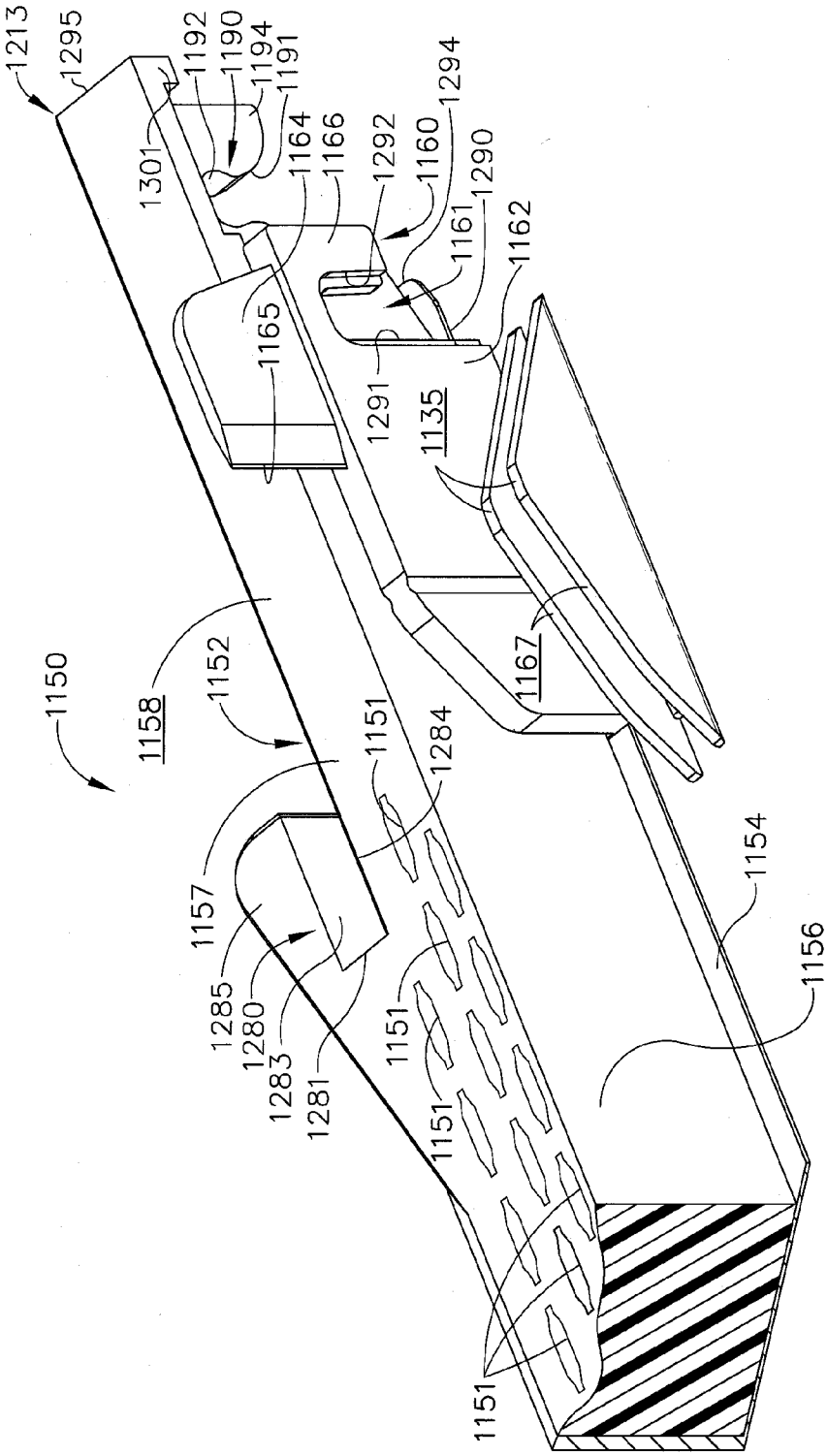
1213
1295
1192
1190
1194
1191
1301
1164
1166
1292
1160
1294
1290
1161
1162
1165
1291
1135
1167
1150
1158
1152
1151
1284
1157
1285
1280
1283
1281
1154
1156

FIG. 102

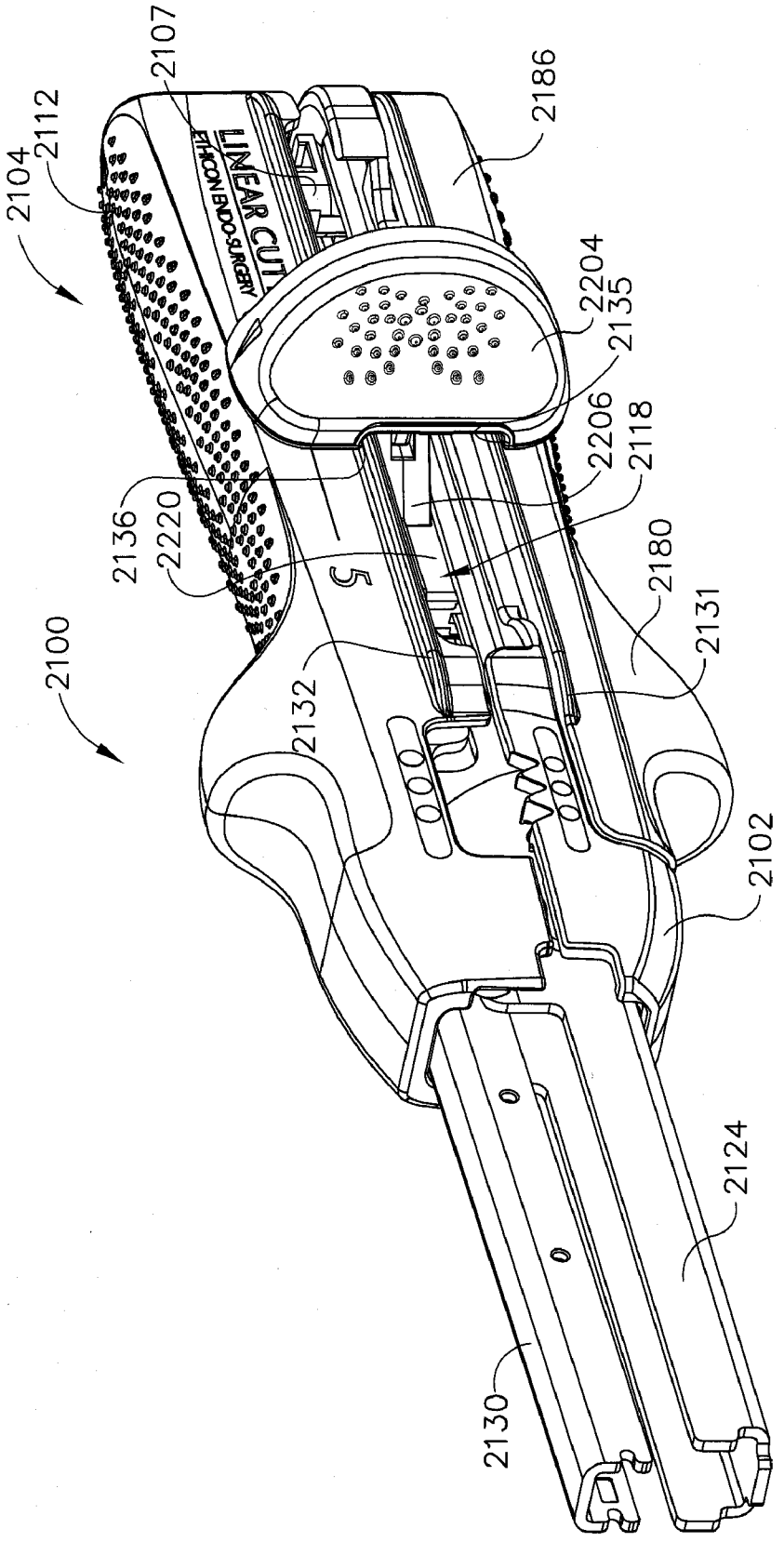
2107
2112
2104
2186
LINEAR CUT
ETHICON ENDO-SURGERY
2204
2135
2206
2118
2136
2220
2180
2131
2100
2132
2102
2124
2130

FIG. 103

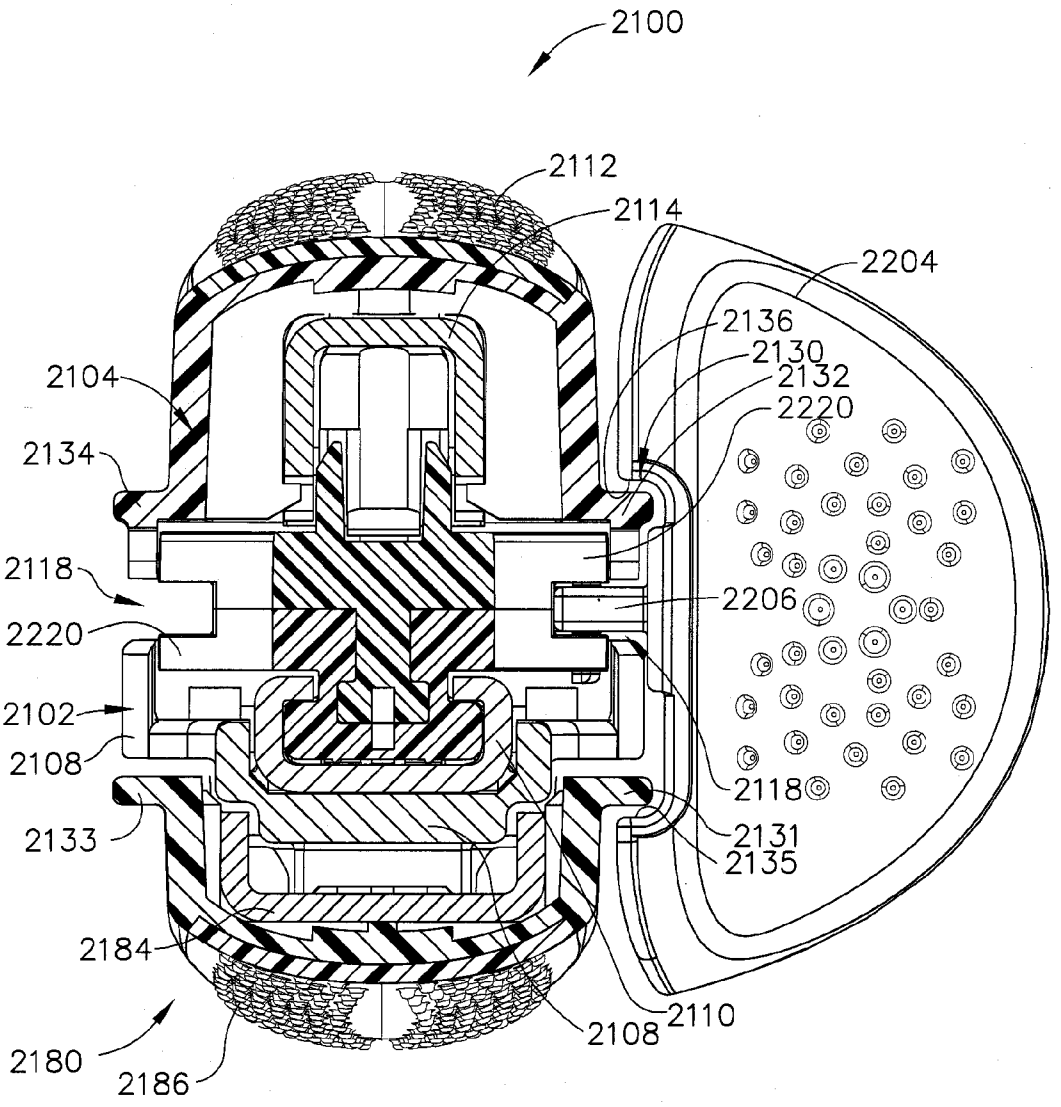
2100
2112
2114
2204
2136
2130
2132
2220
2104
2134
2118
2206
2220
2102
2108
2118
2133
2131
2135
2184
2110
2108
2180
2186

FIG. 104

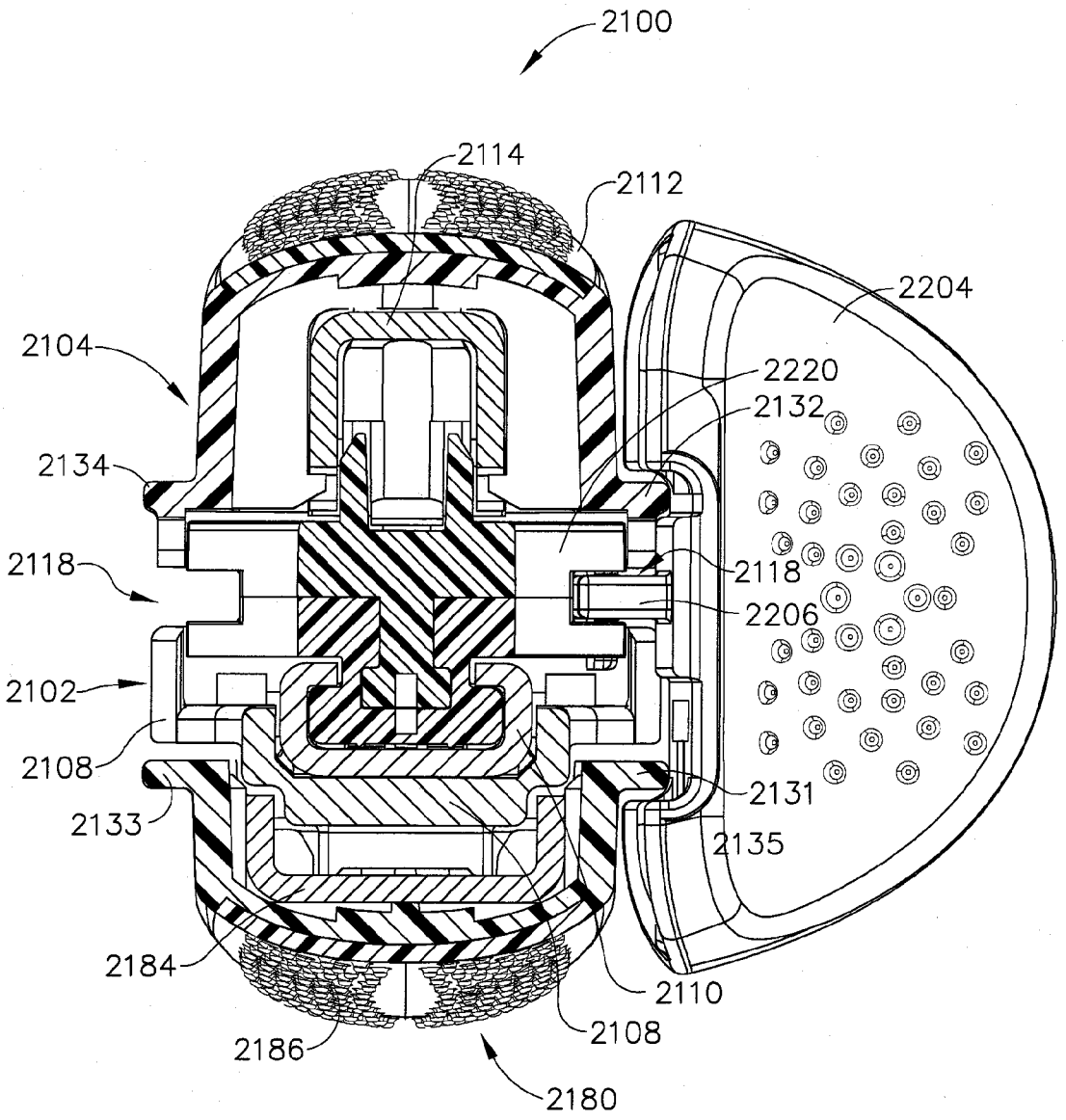
2100
2114
2112
2204
2104
2220
2132
2134
2118
2118
2206
2102
2108
2131
2133
2135
2184
2110
2108
2186
2180

FIG. 105

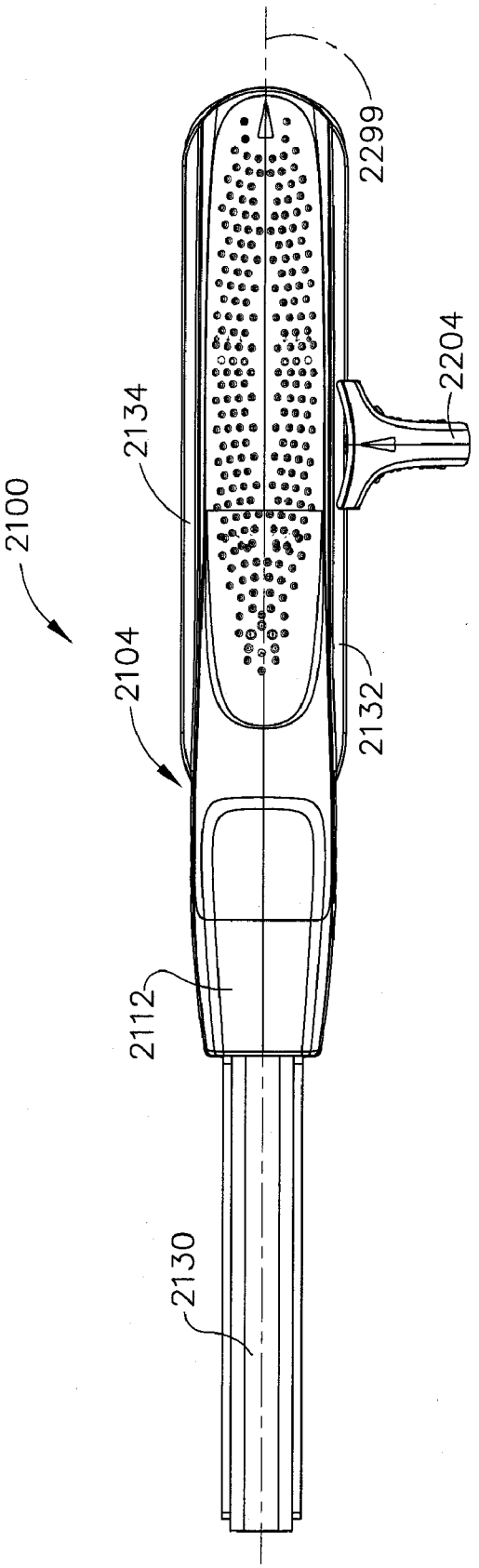


FIG. 106

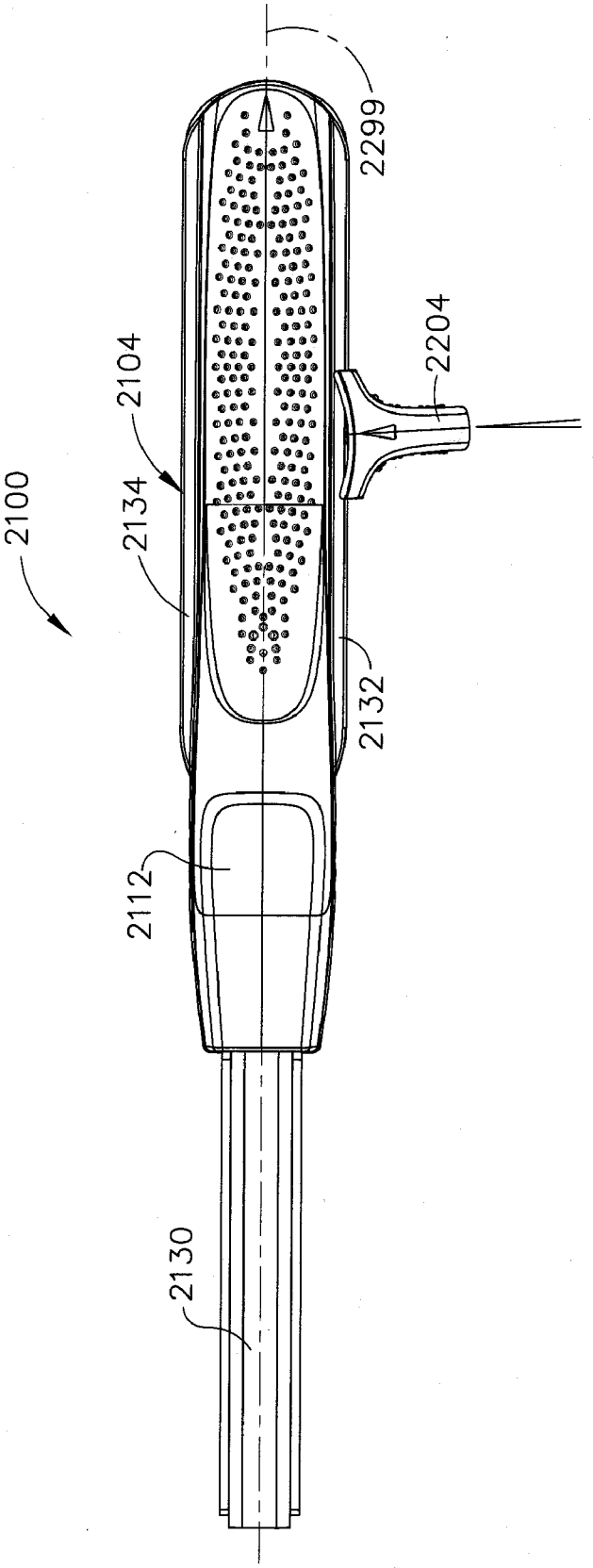


FIG. 107

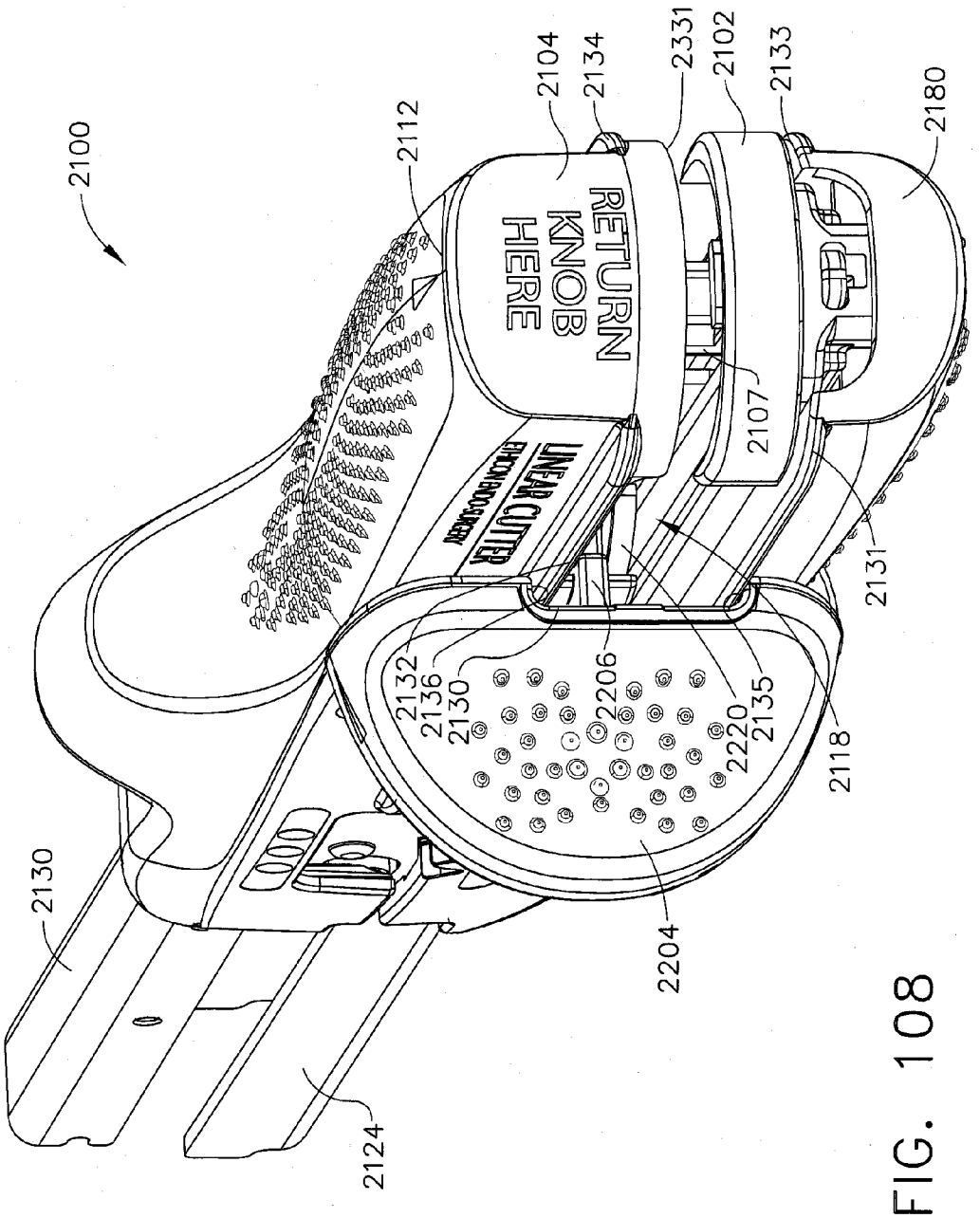
2100
2112
2104
2134
2331
2102
2133
2180
RETURN KNOB HERE
LINEAR CUTTER
2107
2131
2132
2136
2130
2206
2220
2135
2118
2130
2204
2124

FIG. 108

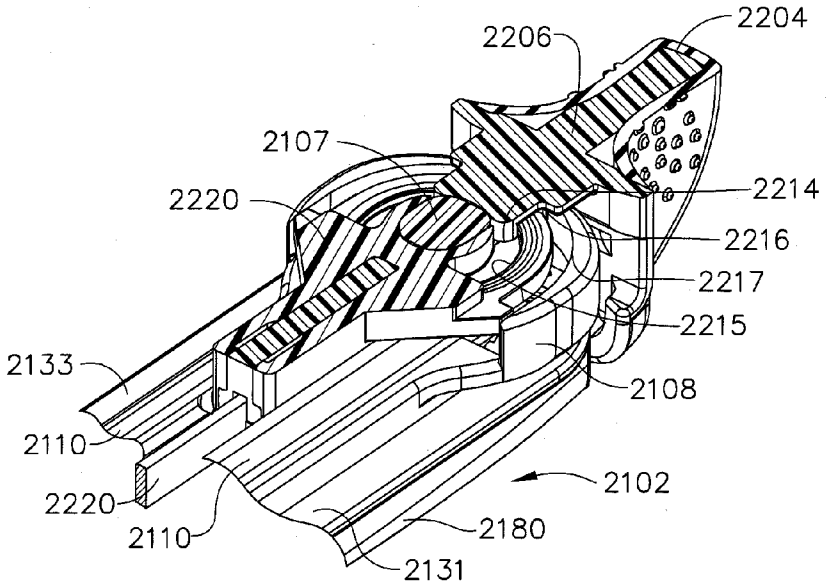


FIG. 109

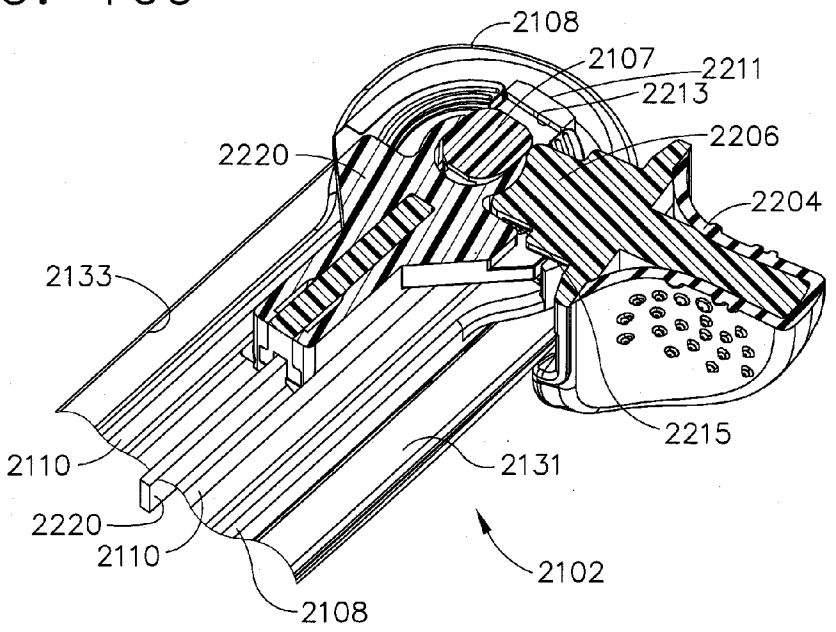


FIG. 110

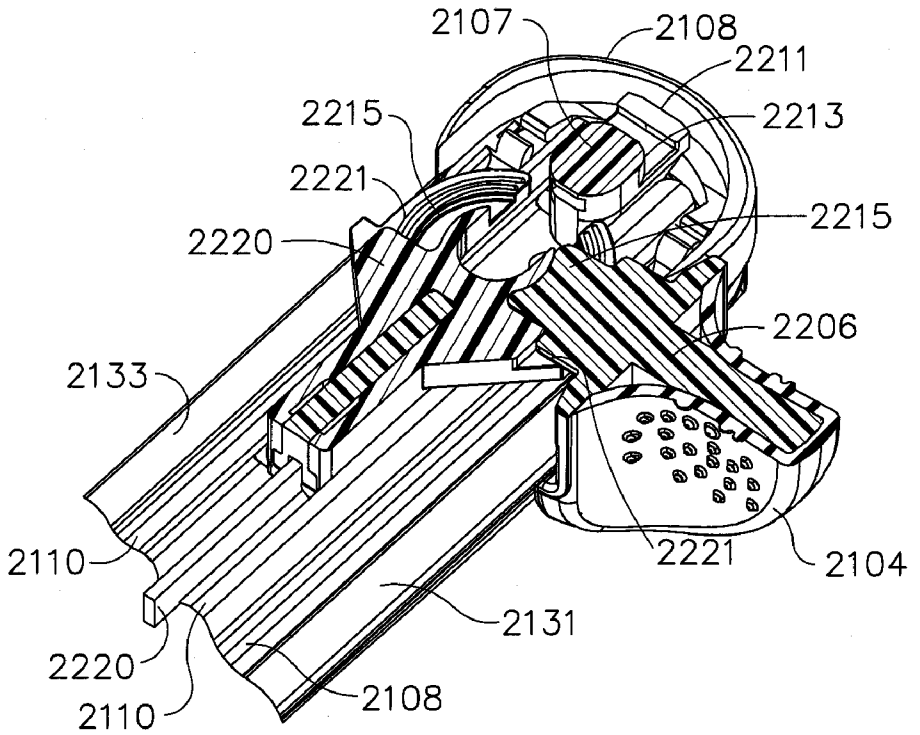
2107
2108
2211
2215
2213
2221
2215
2220
2206
2133
2110
2221
2104
2131
2220
2108
2110

FIG. 111

# SURGICAL STAPLING INSTRUMENT WITH IMPROVED FIRING TRIGGER ARRANGEMENT

## CROSS-REFERENCE TO RELATED APPLICATIONS

**[0001]** This non-provisional patent application is a continuation-in-part application under 35 U.S.C. §120 of U.S. patent application Ser. No. 12/725,993, entitled STAPLE CARTRIDGE, filed on Mar. 17, 2010, which is a continuation-in-part application under 35 U.S.C. §120 of U.S. patent application Ser. No. 12/234,149, entitled SURGICAL STAPLING INSTRUMENT WITH CUTTING MEMBER ARRANGEMENT, filed on Sep. 19, 2008, the entire disclosures of which are hereby incorporated by reference herein. This non-provisional patent application is a continuation-in-part application under 35 U.S.C. §120 of U.S. patent application Ser. No. 12/622,099, entitled SURGICAL STAPLER HAVING A CLOSURE MECHANISM, filed on Nov. 19, 2009 which claims the benefit under 35 U.S.C. §119(e) of U.S. Provisional Patent Application No. 61/250,377, entitled SURGICAL STAPLER, filed on Oct. 9, 2009, the entire disclosures of which are hereby incorporated by reference herein. This non-provisional patent application is a continuation-in-part application under 35 U.S.C. §120 of U.S. patent application Ser. No. 12/843,436, entitled SURGICAL STAPLING INSTRUMENT WITH IMPROVED FIRING TRIGGER ARRANGEMENT, filed on Jul. 26, 2010, which is a continuation application under 35 U.S.C. §120 of U.S. patent application Ser. No. 12/030,424, entitled SURGICAL STAPLING INSTRUMENT WITH IMPROVED FIRING TRIGGER ARRANGEMENT, filed on Feb. 13, 2008, the entire disclosures of which are hereby incorporated by reference herein.

## BACKGROUND

**[0002]** i. Technical Field

**[0003]** The present invention relates to stapling instruments and, in various embodiments, to a surgical stapling instrument for producing one or more rows of staples.

**[0004]** ii. Background of the Related Art

**[0005]** In recent years, there has been an increasing tendency for surgeons to use stapling instruments to suture body tissues such as a lung, an esophagus, a stomach, a duodenum and/or other organs in the intestinal tract. The use of an appropriate stapling instrument in many instances may perform a better job in less time and simplify previously difficult surgical procedures such as gastrointestinal anastomoses. Previous linear two and four row cutting staplers comprised cartridge-less instruments into which staples were individually hand-loaded. Other previous devices have included a presterilized disposable staple loading unit and a cutting member which could be utilized for dividing the tissue and forming the rows of staples simultaneously. An example of such a surgical stapler is disclosed in U.S. Pat. No. 3,499,591, entitled INSTRUMENT FOR PLACING LATERAL GASTROINTESTINAL ANASTOMOSES, which issued on Mar. 10, 1970, the entire disclosure of which is hereby incorporated by reference herein.

**[0006]** A stapling instrument can include a pair of cooperating elongate jaw members, wherein each jaw member can be adapted to be inserted into an internal, tubular body organ to be anastomosed. In various embodiments, one of the jaw members can support a staple cartridge with at least two laterally spaced rows of staples, and the other jaw member can support an anvil with staple-forming pockets aligned with the rows of staples in the staple cartridge. Generally, the stapling instrument can further include a pusher bar and knife blade which are slidable relative to the jaw members to sequentially eject staples from the staple cartridge via camming surfaces on the pusher bar. In at least one embodiment, the camming surfaces can be configured to activate a plurality of staple drivers carried by the cartridge and associated with the individual staples to push the staples against the anvil and form laterally spaced rows of deformed staples in the tissue gripped between the jaw members. In typical stapling instruments, however, the anvil is unmovable relative to the staple cartridge once the jaw members have been assembled together and the formed height of the staples cannot be adjusted. In at least one embodiment, the knife blade can trail the pusher bar and cut the tissue along a line between the staple rows. Examples of such stapling instruments are disclosed in U.S. Pat. No. 4,429,695, entitled SURGICAL INSTRUMENTS, which issued on Feb. 7, 1984, the entire disclosure of which is hereby incorporated by reference herein.

## SUMMARY

**[0007]** In at least one form, a surgical stapling instrument can comprise a first side, a second side, a longitudinal axis, a first housing member, and a second housing member. The first housing member can comprise a staple cartridge attachment portion configured to operably support a staple cartridge, and a first lock rail extending along the longitudinal axis. The second housing member can comprise a jaw member configured to operably support an anvil configured to deform staples deployed from the staple cartridge, and a second lock rail extending along the longitudinal axis. The surgical stapling instrument can further comprise a pusher bar configured to move a staple driver relative to the staple cartridge attachment portion and the jaw member; and an actuator configured to receive a force thereto, wherein the actuator is configured to be moved between a first position and a second position, wherein the actuator is configured to be moved along the first side when the actuator is in the first position, wherein the actuator is configured to be moved along the second side when the actuator is in the second position, and wherein the actuator further comprises at least one lock rail receiver configured to receive the first lock rail and the second lock rail.

**[0008]** In at least one form, a surgical stapling instrument can comprise a first side, a second side, a first housing member, and a second housing member. The first housing member can comprise a first proximal end portion, a first distal end portion, a staple cartridge attachment portion configured to operably support a staple cartridge, and a first longitudinal lock portion extending from the first proximal end portion toward the first distal end portion. The second housing member can comprise a second proximal end portion, a second distal end portion, a jaw member configured to operably support an anvil configured to deform staples deployed from the staple cartridge, and a second longitudinal lock portion extending from the second proximal end portion toward the second distal end portion. The surgical stapling instrument can further comprise a drive member configured to move a staple driver relative to the staple cartridge attachment portion and the jaw member, and an actuator configured to receive a force thereto, wherein the actuator is configured to be moved between a first position and a second position, wherein the

actuator is configured to be moved along the first side when the actuator is in the first position, wherein the actuator is configured to be moved along the second side when the actuator is in the second position, and wherein the actuator further comprises at least one actuator lock portion configured to be aligned with the first longitudinal lock portion and the second longitudinal lock portion.

**[0009]** In at least one form, a surgical stapling instrument can comprise a first side, a second side, a longitudinal axis, a first housing member, and a second housing member. The first housing member can comprise a staple cartridge attachment portion configured to operably support a staple cartridge, and a first lock rail extending along the longitudinal axis. The second housing member can comprise a jaw member configured to operably support an anvil configured to deform staples deployed from the staple cartridge, and a second lock rail extending along the longitudinal axis. The surgical stapling instrument can further comprise a pusher bar configured to move a staple driver relative to the staple cartridge attachment portion and the jaw member, and an actuator configured to receive a force thereto, wherein the actuator is configured to be moved between a first position and a second position, wherein the actuator is configured to be moved along the first side when said actuator is in the first position, wherein the actuator is configured to be moved along the second side when the actuator is in the second position, and wherein the actuator further comprises capturing means for capturing the first lock rail and the second lock rail.

## BRIEF DESCRIPTION OF DRAWINGS

**[0010]** The above-mentioned and other features and advantages of this invention, and the manner of attaining them, will become more apparent and the invention itself will be better understood by reference to the following description of embodiments of the invention taken in conjunction with the accompanying drawings, wherein:

**[0011]** FIG. **1** is a perspective view of a linear anastomotic stapling instrument;

**[0012]** FIG. **2** is a side elevational view showing the anastomotic stapling instrument of FIG. **1** partially disassembled with its upper anvil carrying jaw member detached from its lower staple cartridge carrying jaw member;

**[0013]** FIG. **3** is a side elevational view showing the anastomotic stapling instrument of FIG. **1** in its assembled configuration;

**[0014]** FIG. **4** is a cross-sectional view of the anastomotic stapling instrument of FIG. **1** showing a cam mechanism for urging the rear portions of the upper and lower jaw members apart;

**[0015]** FIG. **5** is a bottom view of the anvil carrying jaw member of the anastomotic stapling instrument of FIG. **1**;

**[0016]** FIG. **6** is a top view of the staple cartridge carrying jaw member of the anastomotic stapling instrument of FIG. **1**;

**[0017]** FIG. **7** is a bottom view of the anastomotic stapling instrument of FIG. **1**;

**[0018]** FIG. **8** is a front end view of the anastomotic stapling instrument of FIG. **1**;

**[0019]** FIG. **9** is a rear end view of the anastomotic stapling instrument of FIG. **1**;

**[0020]** FIG. **10** is a perspective view of a pusher bar and knife blade assembly of the anastomotic stapling instrument of FIG. **1**;

**[0021]** FIG. **11** is a perspective view of a pusher block and an actuator knob which are components of the pusher bar and knife blade assembly of FIG. **10**;

**[0022]** FIG. **12** is a partial cross-sectional view of the rear portion of the anastomotic stapling instrument of FIG. **1** illustrating the cam mechanism in its inoperative position;

**[0023]** FIG. **13** is a partial cross-sectional view of the rear portion of the anastomotic stapling instrument of FIG. **1** illustrating the cam mechanism in its operative position;

**[0024]** FIG. **14** is a side view of the staple cartridge of the anastomotic stapling instrument of FIG. **1**;

**[0025]** FIG. **15** is a top view of the staple cartridge of the anastomotic stapling instrument of FIG. **1**;

**[0026]** FIG. **16** is a bottom view of the staple cartridge of the anastomotic stapling instrument of FIG. **1**;

**[0027]** FIG. **17** is a partial cross-sectional view of the anvil and staple cartridge carrying jaw members of FIGS. **5** and **6** illustrating the operation of the pusher bar and knife blade assembly of FIG. **10**;

**[0028]** FIG. **18** is a cross-sectional view of the anastomotic stapling instrument of FIG. **1** taken along line **18-18** in FIG. **4**;

**[0029]** FIG. **19** is a cross-sectional view of the anastomotic stapling instrument of FIG. **1** taken along line **19-19** in FIG. **4**;

**[0030]** FIG. **20** is a detail view of a portion of the anvil and staple cartridge shown in FIG. **18**;

**[0031]** FIG. **21** is a perspective view of a stapling instrument in accordance with one non-limiting embodiment of the present invention;

**[0032]** FIG. **22** is a perspective view of the stapling instrument of FIG. **21** illustrating a first actuator knob in an extended position;

**[0033]** FIG. **23** is a perspective view of the stapling instrument of FIG. **21** illustrating the extended actuator knob of FIG. **22** after it has been advanced distally;

**[0034]** FIG. **24** is an exploded view of a clutch mechanism for operably engaging one or more actuator knobs with a pusher bar of the stapling instrument of FIG. **21**;

**[0035]** FIG. **25** is a perspective view of a guide member of the clutch mechanism of FIG. **24**;

**[0036]** FIG. **26** is a perspective view of an actuator knob of the stapling instrument of FIG. **21**;

**[0037]** FIG. **27** is another perspective view of the clutch mechanism of FIG. **24**;

**[0038]** FIG. **28** is a perspective view of the stapling instrument of FIG. **21** illustrating the first actuator knob in a retracted position and a second actuator knob in an extended position;

**[0039]** FIG. **29** is a partial exploded view of a stapling instrument in accordance with one non-limiting embodiment of the present invention;

**[0040]** FIG. **30** is a partial perspective view of the stapling instrument of FIG. **29** illustrating an actuator knob after it has been advanced distally along a first side of the stapling instrument;

**[0041]** FIG. **31** is a partial perspective view of the stapling instrument of FIG. **29** illustrating the actuator knob of FIG. **30** being rotated between a first position and a second position;

**[0042]** FIG. **32** is a partial perspective view of the stapling instrument of FIG. **29** illustrating the actuator knob of FIG. **30** after it has been advanced distally along a second side of the stapling instrument;

**[0043]** FIG. **33** is an exploded view of a pusher bar assembly of the stapling instrument of FIG. **29** configured to allow the actuator knob of FIG. **30** to be rotated between its first and second positions;

**[0044]** FIG. **34** is a perspective view of a surgical stapling instrument in accordance with at least one embodiment of the present invention;

**[0045]** FIG. **35** is an exploded perspective view of the surgical stapling instrument of FIG. **34**;

**[0046]** FIG. **36** is an exploded elevational view of the surgical stapling instrument of FIG. **34**;

**[0047]** FIG. **37** is a partial cross-sectional view of the surgical stapling instrument of FIG. **34** illustrating first and second portions being assembled together;

**[0048]** FIG. **38** is a partial cross-sectional view of the surgical stapling instrument of FIG. **34** illustrating the proximal end of the first portion of FIG. **37** being locked to the proximal end of the second portion of FIG. **37** and illustrating the second portion being rotated toward the first portion;

**[0049]** FIG. **39** is a partial cross-sectional view of the surgical stapling instrument of FIG. **34** illustrating a latch rotatably mounted to the first portion, wherein the latch is engaged with the second portion and wherein the latch has been rotated into a partially-closed position;

**[0050]** FIG. **40** is a partial cross-sectional view of the surgical stapling instrument of FIG. **34** illustrating the latch of FIG. **39** in a closed position;

**[0051]** FIG. **41** is a perspective view of a staple cartridge assembly of the surgical stapling instrument of FIG. **34**;

**[0052]** FIG. **42** is an exploded view of the staple cartridge assembly of FIG. **41**;

**[0053]** FIG. **43** is a cross-sectional view of the staple cartridge assembly of FIG. **41** taken along line **43-43** in FIG. **42**;

**[0054]** FIG. **44** is an exploded view of a staple sled and cutting member assembly of the staple cartridge assembly of FIG. **41**;

**[0055]** FIG. **45** is a perspective view of the staple sled and cutting member assembly of FIG. **44**;

**[0056]** FIG. **46** is a perspective view of the surgical stapling instrument of FIG. **34** illustrating a firing actuator moved distally along a first side of the surgical stapling instrument;

**[0057]** FIG. **47** is a perspective view of the surgical stapling instrument of FIG. **34** illustrating the firing actuator of FIG. **46** moved distally along a second side of the surgical stapling instrument;

**[0058]** FIG. **48** is a cross-sectional view of a surgical stapling instrument in accordance with at least one alternative embodiment of the present invention illustrating a latch in a partially-closed position and a locking mechanism engaged with a firing actuator;

**[0059]** FIG. **49** is a cross-sectional view of the surgical stapling instrument of FIG. **48** wherein the latch has been moved into a closed position and has disengaged the locking mechanism from the firing actuator;

**[0060]** FIG. **50** is a perspective view of an anvil assembly of the surgical stapling instrument of FIG. **34**;

**[0061]** FIG. **51** is an exploded perspective view of the anvil assembly of FIG. **50**;

**[0062]** FIG. **52** is another exploded perspective view of the anvil assembly of FIG. **50**;

**[0063]** FIG. **53** is an exploded cross-sectional elevational view of the anvil assembly of FIG. **50**;

**[0064]** FIG. **54** is a cross-sectional assembly view of the anvil assembly of FIG. **50** illustrating an anvil adjustment member in a first position;

**[0065]** FIG. **55** is a cross-sectional assembly view of the anvil assembly of FIG. **50** illustrating the anvil adjustment member of FIG. **54** in a second position;

**[0066]** FIG. **56** is a cross-sectional assembly view of the anvil assembly of FIG. **50** illustrating the anvil adjustment member of FIG. **54** in a third position;

**[0067]** FIG. **57** is a perspective view of a surgical stapling instrument in accordance with at least one alternative embodiment of the present invention;

**[0068]** FIG. **58** is a cross-sectional view of the surgical stapling instrument of FIG. **57** taken along line **58-58** in FIG. **57**;

**[0069]** FIG. **59** is a partial exploded view of the proximal end of the surgical stapling instrument of FIG. **57** including a detent mechanism for releasably holding a rotatable anvil adjustment member in position;

**[0070]** FIG. **60** is a perspective view of the surgical stapling instrument of FIG. **57** with some components removed and others shown in cross-section;

**[0071]** FIG. **61** is an exploded view of portions of the surgical stapling instrument of FIG. **57** illustrating a rotatable anvil adjustment member in a first orientation;

**[0072]** FIG. **62** is a perspective view of the rotatable anvil adjustment member of FIG. **61**;

**[0073]** FIG. **63** is an end view of the surgical stapling instrument of FIG. **57** with some components removed and others shown in dashed lines illustrating the rotatable anvil adjustment member in the first orientation of FIG. **61**;

**[0074]** FIG. **64** is a cross-sectional end view of the surgical stapling instrument of FIG. **57** taken along line **64-64** in FIG. **57**;

**[0075]** FIG. **65** is an end view of the surgical stapling instrument of FIG. **57** illustrating the rotatable anvil adjustment member of FIG. **61** rotated in a first direction into a second orientation;

**[0076]** FIG. **66** is a cross-sectional end view of the surgical stapling instrument of FIG. **57** illustrating the anvil adjustment member in the second orientation of FIG. **65**;

**[0077]** FIG. **67** is an end view of the surgical stapling instrument of FIG. **57** illustrating the rotatable anvil adjustment member of FIG. **61** rotated in a second direction into a third orientation;

**[0078]** FIG. **68** is a cross-sectional end view of the surgical stapling instrument of FIG. **57** illustrating the anvil adjustment member in the third orientation of FIG. **67**;

**[0079]** FIG. **69** is a perspective view of an actuator for rotating the anvil adjustment member of FIG. **61**;

**[0080]** FIG. **70** is a partial cross-sectional view of a surgical stapling instrument including a spring configured to bias the distal end of a first handle portion away from the distal end of a second handle portion when the stapling instrument is in a partially-closed configuration;

**[0081]** FIG. **71** is a similar perspective view of the surgical stapling instrument of FIG. **34** to that of FIG. **50**;

**[0082]** FIG. **72** is a detail view of a latch projection extending from an anvil of a surgical stapling instrument in accordance with at least one alternative embodiment of the present invention;

**[0083]** FIG. **73** is a diagram illustrating the latch projection of FIG. **72** and a latch configured to engage the latch projection and move the latch projection into a latch recess;

**[0084]** FIG. **74** is an elevational view of the latch projection of FIG. **72**;

**[0085]** FIG. **75** is a perspective view of a staple pocket in accordance with at least one embodiment of the present invention;

**[0086]** FIG. **76** is a top view of the staple pocket of FIG. **75**;

**[0087]** FIG. **77** is a cross-sectional view of the staple pocket of FIG. **75** taken along line **77-77** in FIG. **76**;

**[0088]** FIG. **78** is a cross-sectional view of the staple pocket of FIG. **75** taken along line **78-78** in FIG. **76**;

**[0089]** FIG. **79** is another top view of the staple pocket of FIG. **75**;

**[0090]** FIG. **80** is a cross-sectional view of the staple pocket of FIG. **75** taken along line **80-80** in FIG. **79**;

**[0091]** FIG. **81** is a cross-sectional view of the staple pocket of FIG. **75** taken along line **81-81** in FIG. **79**;

**[0092]** FIG. **82** is an elevational view of a surgical staple in an undeformed shape;

**[0093]** FIG. **83** is an elevational view of the surgical staple of FIG. **82** in a deformed shape in accordance with at least one embodiment of the present invention;

**[0094]** FIG. **84** is a side view of the surgical staple of FIG. **82** in the deformed shape of FIG. **83**;

**[0095]** FIG. **85** is a plan view of the surgical staple of FIG. **82** in the deformed shape of FIG. **83**;

**[0096]** FIG. **85**A is another plan view of the surgical staple of FIG. **82** in the deformed shape of FIG. **83**;

**[0097]** FIG. **86** is an elevational view of a surgical staple in an undeformed shape;

**[0098]** FIG. **87** is a bottom view of the surgical staple of FIG. **86** in an undeformed shape;

**[0099]** FIG. **88** is a bottom view of the surgical staple of FIG. **86** in a deformed shape in accordance with at least one embodiment of the present invention;

**[0100]** FIG. **89** is a partial cross-sectional view of the surgical staple of FIG. **86**;

**[0101]** FIG. **90** is an elevational view of a surgical staple in a deformed shape in accordance with at least one embodiment of the present invention;

**[0102]** FIG. **91** is an elevational view of a surgical staple in a deformed shape;

**[0103]** FIG. **92** is an exploded perspective view of the surgical stapling instrument of FIG. **34**;

**[0104]** FIG. **93** is an exploded elevational view of the surgical stapling instrument of FIG. **34**;

**[0105]** FIG. **94** is a partial cross-sectional view of the surgical stapling instrument of FIG. **34** illustrating a latch rotatably mounted to the first portion, wherein the latch is engaged with the second portion and wherein the latch has been rotated into a partially-closed position;

**[0106]** FIG. **95** is a perspective view of a staple cartridge assembly of the surgical stapling instrument of FIG. **34**;

**[0107]** FIG. **96** is an exploded view of the staple cartridge assembly of FIG. **95**;

**[0108]** FIG. **97** is a cross-sectional view of the staple cartridge assembly of FIG. **95**;

**[0109]** FIG. **98** is an exploded view of a staple sled and cutting member assembly of the staple cartridge assembly of FIG. **95**;

**[0110]** FIG. **99** is a perspective view of the staple sled and cutting member assembly of FIG. **98**;

**[0111]** FIG. **100** is a detail view of a distal end of a drive bar configured to be operably connected to the staple sled and cutting assembly of FIG. **98**, wherein the drive bar distal end is illustrated in a proximal position in solid lines a second, or distal, position in phantom lines;

**[0112]** FIG. **101** is a partial bottom view of the staple cartridge assembly of FIG. **95**;

**[0113]** FIG. **102** is a cross-sectional view of a staple cartridge assembly in accordance with an alternative embodiment;

**[0114]** FIG. **103** is a perspective view of a surgical stapling instrument comprising a firing actuator in a partially-advanced position;

**[0115]** FIG. **104** is a cross-sectional view of the surgical stapling instrument of FIG. **103** illustrating the firing actuator in the partially-advanced position;

**[0116]** FIG. **105** is a cross-sectional view of the surgical stapling instrument of FIG. **103** illustrating the firing actuator being returned toward an unfired position;

**[0117]** FIG. **106** is a top view of the surgical stapling instrument of FIG. **103** illustrating the firing actuator being moved distally;

**[0118]** FIG. **107** is a top view of the surgical stapling instrument of FIG. **107** illustrating the firing actuator being moved proximally;

**[0119]** FIG. **108** is another perspective view of the surgical stapling instrument of FIG. **103**;

**[0120]** FIG. **109** is a cross-sectional view of the proximal end of the surgical stapling instrument of FIG. **103** illustrating the firing actuator in an unfired position;

**[0121]** FIG. **110** is a cross-sectional view of the proximal end of the surgical stapling instrument of FIG. **103** illustrating the firing actuator rotated to a first side of the surgical stapling instrument housing; and

**[0122]** FIG. **111** is a cross-sectional view of the proximal end of the surgical stapling instrument of FIG. **103** illustrating the firing actuator in a partially-fired position.

**[0123]** Corresponding reference characters indicate corresponding parts throughout the several views. The exemplifications set out herein illustrate preferred embodiments of the invention, in one form, and such exemplifications are not to be construed as limiting the scope of the invention in any manner.

## DETAILED DESCRIPTION

**[0124]** Certain exemplary embodiments will now be described to provide an overall understanding of the principles of the structure, function, manufacture, and use of the devices and methods disclosed herein. One or more examples of these embodiments are illustrated in the accompanying drawings. Those of ordinary skill in the art will understand that the devices and methods specifically described herein and illustrated in the accompanying drawings are non-limiting exemplary embodiments and that the scope of the various embodiments of the present invention is defined solely by the claims. The features illustrated or described in connection with one exemplary embodiment may be combined with the features of other embodiments. Such modifications and variations are intended to be included within the scope of the present invention.

**[0125]** The entire disclosures of the following United States patent applications are hereby incorporated by reference herein:

**[0126]** U.S. patent application Ser. No. 12/725,993, entitled STAPLE CARTRIDGE, filed on Mar. 17, 2010;

**[0127]** U.S. patent application Ser. No. 12/234,149, entitled SURGICAL STAPLING INSTRUMENT WITH CUTTING MEMBER ARRANGEMENT, filed on Sep. 19, 2008;

**[0128]** U.S. patent application Ser. No. 12/234,143, entitled SURGICAL STAPLER HAVING AN INTERMEDIATE CLOSING POSITION, filed on Sep. 19, 2008;

**[0129]** U.S. patent application Ser. No. 12/234,133, entitled SURGICAL STAPLER WITH APPARATUS FOR ADJUSTING STAPLE HEIGHT, filed on Sep. 19, 2008;

**[0130]** U.S. patent application Ser. No. 12/234,113, entitled LOCKOUT ARRANGEMENT FOR A SURGICAL STAPLER, filed on Sep. 19, 2008;

**[0131]** U.S. patent application Ser. No. 12/622,099, entitled SURGICAL STAPLER HAVING A CLOSURE MECHANISM, filed on Nov. 19, 2009;

**[0132]** U.S. patent application Ser. No. 12/622,130, entitled METHOD FOR FORMING A STAPLE, filed on Nov. 19, 2009;

**[0133]** U.S. patent application Ser. No. 12/622,113, entitled SURGICAL STAPLER COMPRISING A STAPLE POCKET, filed on Nov. 19, 2009;

**[0134]** U.S. patent application Ser. No. 12/843,436, entitled SURGICAL STAPLING INSTRUMENT WITH IMPROVED FIRING TRIGGER ARRANGEMENT, filed on Jul. 26, 2010;

**[0135]** U.S. patent application Ser. No. 12/030,424, entitled SURGICAL STAPLING INSTRUMENT WITH IMPROVED FIRING TRIGGER ARRANGEMENT, filed on Feb. 13, 2008; and

**[0136]** U.S. Provisional Patent Application No. 61/250,377, entitled SURGICAL STAPLER, filed on Oct. 9, 2009.

**[0137]** Referring to FIGS. **1** and **2**, a linear anastomotic stapling instrument, generally **20**, can comprise an upper elongated anvil carrying jaw member **22** and a lower elongated staple cartridge carrying jaw member **24**. Upper anvil carrying jaw member **22** can be supported by a handle **26** with a front portion of the jaw member extending forwardly therefrom. Lower staple cartridge carrying jaw member **24** can be supported by a handle **28** with a front portion of the jaw member extending forwardly therefrom. As shown in FIG. **3**, upper handle **26** and lower handle **28** can be suitably shaped to form a hand grip to facilitate the handling and operation of the stapling instrument by a surgeon. An enlarged front protrusion **27** and a small rear protrusion **29** can be provided on each handle for this purpose. In various embodiments, handles **26** and **28** can be made of plastic of other lightweight materials, for example, while jaw members **22** and **24** can be made of stainless steel or other similar materials, for example.

**[0138]** As shown in FIG. **5**, upper jaw member **22** can comprise a one-piece elongated channel-shaped frame including a pair of opposed, elongated side walls **30** connected by a top wall **31**. Upper handle **26** can include a pair of depending ears **32** located inside the upper handle adjacent to its front end. Upper jaw member **22** can include a slot **34** (FIG. **4**) formed at an intermediate position along its top wall **31** through which depending ears **32** can project downwardly. A latch pin **36** can extend through circular holes formed in side walls **30** of upper jaw member **22** and through circular holes formed in depending ears **32** to pivotally connect the upper jaw member to upper handle **26**.

**[0139]** Referring to FIG. **5**, the front portion of upper jaw member **22** can be provided with a pair of elongated inwardly extending flanges **38** which can define an anvil **40** of the stapling instrument. Flanges **38** can be separated by a central longitudinal slot **42** which extends along the entire length of anvil **40**. At the proximal end of central slot **42**, the flanges **38** can be provided with inwardly sloped guide surfaces **41**. Each flange **38** can also provided with two longitudinal rows of uniformly spaced staple-forming pockets **44**. Referring to FIGS. **4** and **5**, a tapered anvil tip **46** can be mounted at the front of anvil carrying jaw member **22** to facilitate the insertion of the jaw member into hollow, tubular body organs, for example. Anvil tip **46** can include an elongated body **48** (FIG. **4**) which can be inserted through the longitudinal passageway above anvil **40** defined by side walls **30** and flanges **38** of the upper jaw member. This elongated body **48** can extend between depending ears **32** above latch pin **36** and can include an enlarged rear portion **50** located behind ears **32** to hold anvil tip **46** in place on upper jaw member **22**.

**[0140]** Referring to FIGS. **2** and **6**, lower cartridge carrying jaw member **24** can comprise a one-piece elongated channel-shaped frame including a pair of opposed, elongated side walls **52** connected by a bottom wall **53**. Along the rearward portion of lower jaw member **24**, a pair of spaced, elongated upstanding side flanges **54** (FIG. **2**) can extend upward from its opposed side walls **52**. As shown in FIGS. **5** and **6**, the width of lower jaw member **24** between its side flanges **54** can be greater than the width of upper jaw member **22** between its side walls **30** to permit the rear portion of the upper jaw member to be received between side flanges **54** of the lower jaw member when the stapling instrument is assembled for operation. As shown in FIG. **2**, each side flange **54** of lower jaw member **24** can include a vertical notch **56** located in alignment with latch pin **36** on upper jaw member **22**. When upper jaw member **22** and lower jaw member **24** are assembled, the opposite ends of latch pin **36** can be received in notches **56**.

**[0141]** As shown in FIGS. **2** and **6**, lower jaw member **24** can support a staple cartridge **60** which is adapted to receive a plurality of surgical staples **61** (FIG. **17**) arranged in at least two laterally spaced longitudinal rows. Staple cartridge **60** can be mounted at the front portion of lower jaw member **24** between its side walls **52**. Staple cartridge **60** can be divided longitudinally by a central, elongated slot **62** (FIG. **6**) which extends from the proximal end of the cartridge toward its distal end. In various embodiments, a plurality of staple openings **64** formed in staple cartridge **60** can be arranged in two pairs of laterally spaced rows, with each pair of rows disposed on opposite sides of central longitudinal slot **62**. A plurality of surgical staples **61** (FIG. **17**) can be mounted within openings **64** of cartridge **60**. As shown in FIG. **6**, the staple openings **64** in adjacent rows can be staggered to provide more effective stapling of the tissue when the instrument is operated. Referring to FIGS. **15** and **16**, staple cartridge **60** can include a pair of longitudinal slots **66** located on opposite sides of elongated central slot **62** and disposed between the staggered rows of openings **64** on each side of the central slot. Each longitudinal slot **66** can extend from the proximal end of cartridge **60** towards its distal end.

**[0142]** As shown in FIG. **17**, a plurality of staple drivers **65** can be slidably mounted in staple openings **64** for actuating the staples **61** which are loaded into staple cartridge **60**. Referring to FIG. **6**, each staple driver **65** can be designed to simultaneously actuate two staples **61** located in the adjacent rows provided in staple cartridge **60**. Thus, in various embodiments, a first set of staple drivers **65** can be provided for actuating the staples **61** in the staggered rows located on one

side of central longitudinal slot **62**, and a second set of staple drivers **65** can be provided for actuating the staples **61** in the pair of adjacent rows located on the other side of central longitudinal slot **62**.

**[0143]** As shown in FIGS. **2** and **3**, similar to the above, the front or distal end of staple cartridge **60** can include a tapered tip **68** to facilitate the insertion of lower jaw member **24** into a hollow, tubular body organ, for example. Immediately behind its tapered tip **68**, staple cartridge **60** can be provided with a pair of rearwardly extending protrusions **70** (one shown in FIG. **14**) which can be received in corresponding notches provided in side walls **52** of lower jaw member **24**. At the rear of staple cartridge **60**, a pair of depending arms **72** can extend downwardly from the cartridge. Each arm **72** can be notched to provide a side opening **74**. When cartridge **60** is assembled on lower jaw member **24**, its protrusions **70** can be received in corresponding notches provided at the front ends of side walls **52** and its depending arms **72** extend downwardly through an opening **76** (FIG. **4**) formed in bottom wall **53** of jaw member **24**. Lower jaw member **24** can include a pair of depending ears **78** (FIG. **18**) extending downwardly from its side walls **52** on opposite sides of opening **76**. A pivot pin **80** can extend through holes formed in depending ears **78** of lower jaw member **24** and through side openings **74** of depending arms **72** on staple cartridge **60** to fasten the staple cartridge to the lower jaw member.

**[0144]** Referring to FIG. **2**, the stapling instrument **20** can include a latching mechanism, generally **90**, for latching upper jaw member **22** and lower jaw member **24** together at an intermediate position along the jaw members. In various embodiments, jaw members **22** and **24** can be latched together at a position adjacent to the proximal ends of anvil **40** and staple cartridge **60**. In at least one embodiment, latching mechanism **90** can comprise a latch arm **92** (FIG. **2**) pivotally connected to lower jaw member **24** via pivot pin **80** (FIG. **4**). Latch arm **92** can be channel-shaped in configuration and can include a pair of opposed, elongated side walls **94** (FIG. **6**) which are spaced apart by a distance sufficient to span side walls **52** of lower jaw member **24**. Each side wall **94** of latch arm **92** can include an upwardly and forwardly extending hook member **96** provided with a forwardly facing slot **98** for receiving latch pin **36**. A shroud **100** can be mounted on the lower surface of latch arm **92**. When latch arm **92** is closed, as shown in FIG. **3**, shroud **100** can be aligned with the bottom of lower handle **28** to facilitate the handling and operation of stapling instrument **20** by the surgeon. In various embodiments, shroud **100** can be made of plastic or other lightweight materials, for example, while latch arm **92** can be made of stainless steel, for example. As shown in FIG. **7**, shroud **100** can include elongated flanges **102** and **104** extending outwardly from its opposite sides which can serve as fingergrips to enable latch arm **92** to be pivoted downwardly from its latched to its unlatched position. When latch arm **92** is moved to its closed or latched position, the surfaces of slots **98** of hook members **96** can cooperate with latch pin **36** which can act as an over-center latch to maintain latch arm **92** in its latched position.

**[0145]** Referring to FIGS. **6** and **10**, the preferred embodiment of stapling instrument **20** can include an improved pusher bar and knife blade assembly, generally **110**, which can be slidably mounted for longitudinal movement relative to upper and lower jaw members **22** and **24**, respectively, for driving staples **61** from staple cartridge **60** into tissue gripped between the jaw members, forming staples **61** against anvil **40**, and cutting the tissue along a line between the rows of staples formed in the tissue. Pusher bar and knife blade assembly **110** can include a pusher block **112** (FIG. **6**) which can be slidably received within the lower channel-shaped jaw member **24** between its upstanding side flanges **54**. As shown in FIG. **11**, pusher block **112** can be attached to an actuator knob **114** by a flange **116** which includes a laterally projecting finger **118** provided with a longitudinally extending notch **119** on its top surface. Finger **118** can be snap-fitted into a lateral slot **120** formed in pusher block **112** to locate notch **119** underneath a longitudinal locking bar **121** to secure pusher block **112** and actuator knob **114** together. Flange **116** of actuator knob **114** can extend through and rids along an elongated slot **122** (FIG. **2**) formed in one side flange **54** of lower jaw member **24**.

**[0146]** The pusher bar and knife blade assembly **110** can include a pair of staple pusher bars **124** (FIG. **10**) projecting forwardly from pusher block **112** and slidably received in elongated slots **66** (FIG. **16**) of staple cartridge **60**. Pusher block **112** can be provided with a pair of vertical slots **126** (FIG. **11**) in which pusher bars **124** are secured. As shown in FIG. **10**, the front end of each staple pusher bar **124** can be provided with a wedge-shaped tip **128** which defines an inclined cam surface **130** for engaging staple drivers **65** as pusher bars **124** are advanced into staple cartridge **60**. As shown in FIG. **21**, each staple driver **65** can be provided with a sloped surface **132** oriented at the same angle as cam surface **130** of each staple pusher bar **124** to provide a flat, sliding contact between the surfaces.

**[0147]** Referring to FIGS. **6** and **10**, the pusher bar and knife blade assembly **110** can include a knife block **134** which is slidably mounted for longitudinal movement along lower jaw member **24** between its upstanding side flanges **54**. Knife block **134** can include a knife support bar **136** which extends forwardly into central longitudinal slot **62** of staple cartridge **60**. An inclined knife blade **138** provided with a beveled cutting edge **140** can be located at the front end of knife support bar **136**. The beveled cutting edge of knife blade **138** can be oriented at an angle relative to elongate jaw members **22** and **24** and can be slidably received in central longitudinal slot **62** of staple cartridge **60**.

**[0148]** In various embodiments, knife block **134** can include a pair of longitudinal slots **135** (FIG. **19**) extending therethrough which slidably receive staple pusher bars **124** to permit pusher block **112** to slide relative to the knife block. Accordingly, when pusher block **112** is advanced toward staple cartridge **60** by actuator knob **114**, staple pusher bars **124** can slide through knife block **134** which remains stationary until the pusher block moves into engagement with the knife block. After knife block **134** is engaged by pusher block **112**, the knife block and pusher block can advance simultaneously toward staple cartridge **60**. As shown in FIG. **17**, knife blade **138** can be advanced through staple cartridge **60** along with staple pusher bars **124**, forming staples **61** in the tissue gripped between the jaw members and cutting the tissue between the staple rows. Thereafter, when actuator knob **114** is retracted, pusher block **112** can initially slide staple pusher bars **124** backward through knife block **134** which can remain stationary. Each staple pusher bar **124** can include an offset portion **142** which can move into engagement with knife block **134** after staple pusher bars **124** are withdrawn by a predetermined distance. With offset portions **142** of staple pusher bars **124** engaging knife block **134**, pusher block **112** and knife block **134** can be simultaneously

retracted by actuator knob **114** to return pusher bars **124** and knife blade **138** to the start position.

**[0149]** In accordance with various embodiments of the invention, stapling instrument **20** can be provided with jaw clamping means for applying clamping forces to the jaw members to urge staple cartridge **60** and anvil **40** together during the formation of staples **61**. The jaw clamping means can include means for urging the jaw members apart at a position remote from the latching mechanism to resist the forces exerted on staple cartridge **60** and anvil **40** when staples **61** are formed. In at least one embodiment, a cam means can be mounted on one of the jaw members and can be engageable with the other jaw member for moving said jaw members apart at the remote position to urge staple cartridge **60** and anvil **40** together. In various embodiments, a cam member can be pivotally mounted on one of the jaw members at a position remote from the latching mechanism. The cam member can be pivotable from a first inoperative position to a second operative position to move the remote ends of the jaw members apart. The cam member can be operable by pusher block **112** of pusher bar and knife blade assembly **110** to move to its operative position when the pusher block is advanced and to return to its inoperative position when the pusher block is retracted.

**[0150]** In various embodiments, a cam mechanism, generally **150**, can be located adjacent to the rear end of lower jaw member **24**, as shown in FIG. **4**. Cam mechanism **150** can include a cam member **152** pivotally mounted on a transverse pivot pin **154** extending between upstanding side flanges **54** of lower jaw member **24**. Cam member **152** can include a first lower cam surface **156** for engaging top wall **31** of upper jaw member **22** with cam **152** in its first inoperative position (FIG. **12**) and a second higher cam surface **158** for engaging the top wall **31** of upper jaw member **22** with cam **152** disposed in its second operative position (FIG. **13**). First cam surface **156** can be arranged to maintain upper and lower jaw members substantially parallel with cam **152** in its inoperative position. Second cam surface **158** can be arranged to raise the rear end of upper jaw member **22** by approximately 0.125 inch (3.2 mm), for example, when cam **152** pivots from its inoperative position to its operative position. In addition, upper jaw member **22** can be sufficiently flexible to permit the rear portion of upper jaw member **22** to bend upward away from lower jaw member **24** when cam member **152** is moved from its inoperative position to its operative position.

**[0151]** As shown in FIG. **4**, cam member **152** can include a radially extending notch **160** which divides the cam into a large front finger **162** and a small rear finger **164**. Front cam finger **162** can include a flat, rearwardly facing surface **165**, and rear cam finger **164** can include a sloped, forwardly facing surface **166**. With cam **152** in its inoperative position, front cam finger **162** and rear cam finger **164** can extend downwardly through an elongated slot **168** formed in bottom wall **53** of lower jaw member **24**.

**[0152]** In various embodiments, cam member **152** can be operable by pusher block **112** to move from its inoperative position to its operative position when the pusher block is advanced. As shown in FIG. **11**, pusher block **112** can include a pair of rearwardly extending arms **170** which are spaced apart to define a gap **172** therebetween. The rear ends of arms **170** can be connected by a cam actuator pin **174** which extends across gap **172**. Referring to FIGS. **4** and **11**, with cam member **152** disposed in its inoperative position, front cam finger **162** can extend through gap **172** between arms **170** of pusher block **112**, while cam actuator pin **174** can be received in notch **160** between front finger **162** and rear finger **164** of the cam member.

**[0153]** As shown in FIG. **12**, with cam member **152** disposed in its first inoperative position, top wall **31** of upper jaw member **22** can rest on first cam surface **156** of the cam member. With cam member **152** in its inoperative position, top wall **31** of upper jaw member **22** can be substantially parallel to bottom wall **53** of lower jaw member **24**. In addition, pusher block **112** can be located in its start position spaced rearwardly from knife block **134**. When pusher block **112** is advanced, as indicated by arrow **182** (FIG. **13**), cam actuator pin **174** can engage rear surface **165** of front cam finger **162** to rotate cam member **152** in a counter-clockwise direction, as indicated by arrow **184**, to pivot the cam member to its second operative position and move its second cam surface **158** into engagement with top wall **31** of upper jaw member **22**. With cam member **152** pivoted to its operative position, the top wall **31** of upper jaw member **22** can be bent upwardly, as indicated by arrow **186**, away from bottom wall **53** of lower jaw member **24**. The cam member can apply forces to upper jaw member **22** and lower jaw member **24** which bend the rear portions of the jaw members apart. As a result of the bending the rear portions of upper jaw member **22** and lower jaw member **24** apart, additional clamping forces can be applied to the front portions of upper jaw member **22** and lower jaw member **24** to clamp anvil **40** and staple cartridge **60** against the tissue gripped between the jaw members. Thus, anvil **40** and staple cartridge **60** can be urged together to resist the forces exerted on the anvil and staple cartridge when pusher bar and knife blade assembly **110** is advanced to form staples **61** and cut the tissue.

**[0154]** Referring to FIG. **13**, when pusher block **112** is retracted after staples **61** are formed, cam actuator pin **174** can engage sloped surface **166** of rear cam finger **164** to pivot cam member **152** in a clockwise direction. As cam actuator pin **174** moves along sloped surface **166** into notch **160**, cam member **152** can pivot in a clockwise direction and return to its first inoperative position (FIG. **12**) with its first cam surface **156** in engagement with top wall **31** of upper jaw member **22**. As a result, the forces exerted on the rear portions of upper jaw member **22** and lower jaw member **24** by cam **152** can be released and top wall **31** of upper jaw member **22** can return to a substantially parallel relationship with bottom wall **53** of lower jaw member **24**. Similarly, the clamping forces applied to the front portions of jaw members **22** and **24** can be released to unclamp anvil **40** and staple cartridge **60**.

**[0155]** In various embodiments, stapling instrument **20** can include spacer means mounted on one of the jaw members for maintaining a predetermined gap between staple cartridge **60** and anvil **40** of the stapling instrument. Referring to FIGS. **4** and **6**, this spacer means can be embodied as a spacer pin **190** mounted adjacent to the distal end of staple cartridge **60**. Spacer pin **190** can extend vertically upward from bottom wall **53** of lower jaw member **24** through staple cartridge **60** and project upwardly from the top of the staple cartridge by a predetermined distance. As shown in FIG. **5**, one flange **38** of anvil **40** can include a flange section **192** adjacent to its distal end for engaging spacer pin **190**. With the stapling instrument assembled for operation (FIG. **4**), spacer pin **190** can engage flange section **192** to maintain a predetermined gap between anvil **40** and staple cartridge **60**.

**[0156]** In the operation of stapling instrument **20**, the tissue to be stapled and cut can be initially placed between jaw

members **22** and **24** and clamped by the jaw members. Thus, handles **26** and **28** can be unlatched by pivotal movement of latch arm **92** downward to its unlatched position (FIG. **2**). As a result, the opposite ends of latch pin **36** can be disengaged from slots **98** formed in hook members **96** of latching arm **92**. Thereafter, upper and lower jaw members **22** and **24** can be separated by disengaging latch pin **36** from slots **56** formed in side flanges **54** of the lower jaw member.

**[0157]** Next, the tissue to be stapled and cut can be placed on jaw members **22** and **24**. For example, as shown in FIG. **17**, a piece of tubular, intestinal tissue may be slipped onto the front portion of each jaw member. After the tissue is placed on the jaw member, stapling instrument **20** can be reassembled. The reassembly can be accomplished by aligning latch pin **36** with vertical slots **56** formed in upstanding side flanges **54** of lower jaw member **24**. Thereafter, side flanges **54** of lower jaw member **24** can be positioned inside upper handle **26**, spanning side walls **30** of upper jaw member **22**, while the opposite ends of latch pin **36** can be inserted into vertical slots **56**. Finally, latch arm **92** can be pivoted upward to its latched position (FIG. **3**) with its cover **100** flush with the bottom of lower handle **28**. As a result, hook members **92** can be pivoted over latch pin **36** and slots **98** can receive the opposite ends of the latch pin. Thus, upper jaw member **22** and lower jaw member **24** can be latched together at an intermediate position therealong adjacent to anvil **40** and staple cartridge **60**. In addition, spacer pin **190** can engage flange section **192** of anvil **40** through the body tissue to maintain a predetermined gap between anvil **40** and staple cartridge **60**.

**[0158]** After the tissue is clamped between the jaw members, stapling instrument **20** can be fired by advancing actuator knob **114** to actuate the pusher bar and knife blade assembly **110**. Initially, in the actuation of cam mechanism **150**, pusher block **112** and pusher bars **124** (FIG. **4**) can be advanced, while knife block **134** can remain stationary. Since only pusher block **112** and its pusher bars **124** are advanced to actuate cam member **152**, the initial force required to operate stapling instrument **20** can be minimized.

**[0159]** Referring to FIG. **12**, during the initial advance of pusher block **112**, pusher bars **124** can slide through knife block **134** and the wedge-shaped tips **128** of the pusher bars can begin to advance through slots **66** of staple cartridge **60**. As pusher block **112** advances toward knife block **134**, its cam actuator pin **174** can engage rear surface **165** of front cam finger **162** to pivot cam **152** counter-clockwise, as indicated by arrow **184** of FIG. **13**, to move the second cam surface **158** of the cam member into engagement with top wall **31** of upper jaw member **22**. Cam member **152** can apply forces to upper jaw member **22** and lower jaw member **24** which bend the rear portions of the jaw members apart. As a result, the rear end of top wall **31** of upper jaw member **22** can be bent upward by approximately 0.125 inch (3.2 mm), for example, relative to the rear end of bottom wall **53** of lower jaw member **24**. The bending of the rear ends of jaw members **22** and **24** apart can result in additional clamping forces on the front portions of the jaw members to clamp anvil **40** and staple cartridge **60** against the tissue gripped between the jaw members. These additional clamping forces tend to resist the forces exerted on anvil **40** and staple cartridge **60**, while the tissue is cut and staples **61** are formed against anvil **40**, to maintain the desired spacing between anvil **40** and staple cartridge **60** to produce formed staples **61** which are substantially uniform in height.

**[0160]** Referring to FIG. **13**, after cam mechanism **150** is actuated, pusher block **112** can subsequently engage knife block **134** to begin the longitudinal movement of knife block **134** toward staple cartridge **60**. In various embodiments, the initial spacing between pusher block **112** and knife block **134** can be arranged such that pusher block **112** engages knife block **134** slightly before cam member **152** arrives at its operative position. Alternatively, the initial spacing between pusher block **112** and knife block **134** can be arranged such that pusher block **112** initially engages knife block **134** after the movement of cam member **152** to its operative position is completed. When pusher block **112** engages knife block **134**, the advance of knife blade **138** along central longitudinal slots **42** and **62** of anvil **40** and staple cartridge **60**, respectively, can be initiated. Thereafter, staple pusher bars **124** and knife blade **138** can be advanced simultaneously to staple and cut the tissue gripped between anvil **40** and staple cartridge **60**.

**[0161]** As pusher block **112** is advanced, staple pusher bars **124** can be moved longitudinally along slots **66** provided in staple cartridge **60**. The two wedge-like cam surfaces **130** of staple pusher bars **124** can move through slots **66** into engagement with the sloped surfaces of staple drivers **65** to sequentially drive staples **61** from cartridge **60** and to form staples **61** into B-shaped configuration against anvil flanges **38**. The cam surfaces **130** can be located at the same distance from pusher block **112** to simultaneously actuate staple drivers **65** located on opposite sides of central longitudinal slot **62**. At the same time, knife block **134** can be advanced to move knife blade **138** through central longitudinal slot **42** of anvil **40** and through central longitudinal slot **62** of staple cartridge **60** to cut the tissue gripped between the jaw members. The additional clamping forces applied to the front portions of upper jaw member **22** and lower jaw member **24** via cam mechanism **150** can tend to resist the forces exerted on anvil **40** and staple cartridge **60** when staples **61** are formed.

**[0162]** After pusher block **112** is fully advanced to form all of the staples in cartridge **60**, the pusher block can be retracted toward its start position by retraction of actuator knob **114**. Initially, only pusher block **112** can move backward from staple cartridge **60** because staple pusher bars **124** slide through knife block **134** which remains stationary. When offset portions **142** of staple pusher bars **124** engage the front of knife block **134**, the knife block can be moved backward from staple cartridge **60** along with pusher block **112**. As a result, staple pusher bars **124** and knife blade **138** can be simultaneously retracted from staple cartridge **60** and anvil **40**.

**[0163]** As pusher block **112** returns toward its start position, cam actuator pin **174** can engage sloped surface **166** of rear cam finger **164** to pivot cam member **152** in a clockwise direction toward its inoperative position. Cam actuator pin **174** can move along sloped surface **166** into slot **160** between cam fingers **162** and **164** to return cam member **152** to its inoperative position. As a result, second cam surface **158** of cam member **152** can be disengaged from the top wall of upper jaw member **22** and rear end of top wall **31** of upper jaw member **22** and move downwardly into engagement with first cam surface **156**. At the same time, front cam finger **162** can pivot downwardly into gap **172** between fingers **170** on pusher block **112**, and both cam fingers **162** and **164** can pivot downwardly into slot **168** formed in bottom wall **53** of lower jaw member **24**. Thereafter, with cam member **152** in its inoperative position, latching arm **92** can be pivoted downward, as shown in FIG. **2**, to permit upper jaw member **22** and lower jaw member **24** to be disassembled. At this point, the cut and stapled tissue can be removed from the jaw members.

**[0164]** As outlined above, a surgical stapling instrument can include an actuator knob, such as actuator knob **114** (FIG. **1**), for example, which can be configured to advance a pusher bar assembly, such as pusher bar assembly **110** (FIG. **10**), within a staple cartridge of the surgical stapling instrument. In various embodiments, actuator knob **114** can be configured to be grasped by a surgeon such that the surgeon can apply a force thereto. In various circumstances, actuator knob **114** can come into contact with or abut tissue surrounding the surgical site when it is advanced distally. In at least one circumstance, as a result, the surgeon may have to reposition the stapling instrument such that actuator knob **114** can pass by the tissue. In other circumstances, the surgeon may have to force actuator knob **114** by the tissue. In either event, such circumstances may be unsuitable and, as a result, there exists a need for a stapling instrument having an actuator knob which can be manipulated to reduce the possibility that the actuator knob may impinge on the surrounding tissue.

**[0165]** In various embodiments of the present invention, referring to FIG. **21**, stapling instrument **220** can include anvil carrying jaw member **222** extending from upper handle **226**, staple cartridge carrying jaw member **224** extending from lower handle **228**, and actuator knobs **214***a* and **214***b* which can be operably engaged with a pusher bar assembly, such as pusher bar assembly **210** as illustrated in FIG. **24**, for example. In various embodiments, a staple cartridge can be removably attached to staple cartridge carrying jaw member **224**, for example, such that, after the staple cartridge has been expended, it can be replaced with another staple cartridge. In at least one embodiment, pusher bar assembly **210** can include a staple driver integrally-formed with or operably mounted thereto which can be moved through the staple cartridge as outlined above. In at least one other embodiment, the staple cartridge can include a staple driver contained therein which can be engaged with and pushed distally by the pusher bar assembly. In any event, first actuator knob **214***a*, for example, can be rotated between a first position (FIG. **21**) in which it is operably disengaged from pusher bar assembly **210** and a second position (FIG. **22**) in which it is operably engaged with pusher bar assembly **210**. Similarly, second actuator knob **214***b* can be configured to be rotated between first and second positions in which it is operably disengaged and engaged, respectively, with pusher bar assembly **210**.

**[0166]** In various embodiments, as a result of the above, the actuator knobs of a stapling instrument can be selectively engaged with a pusher bar assembly such that, in the event that an actuator knob may come into contact with or abut tissue surrounding the surgical site when it is advanced, that actuator knob can remain in its retracted position while another actuator knob can be extended to advance the pusher bar assembly distally. In at least one such embodiment, referring to FIG. **22**, first actuator knob **214***a* can be rotated into its second position such that it can be operably engaged with pusher bar assembly **210** while second actuator knob **214***b* can remain in its retracted position. Thereafter, referring to FIG. **23**, first actuator knob **214***a* can be advanced distally relative to upper handle **226** and lower handle **228** along first side **201** of surgical stapler **210** in order to motivate pusher assembly **210**. In at least one embodiment, first actuator knob **214***a* can be slid within first slot **227** defined between, or within, upper handle **226** and lower handle **228**. In various other circumstances, referring to FIG. **28**, first actuator knob **214***a* can remain in its retracted position while second actuator knob **214***b* can be rotated into its extended position. Similar to the above, second actuator knob **214***b* can be advanced distally along second side **203** of stapling instrument **210** to advance pusher bar assembly **210** within second slot **229**, for example. In at least one embodiment, both actuator knobs **214** can be extended to advance pusher bar assembly **210** distally. In various alternative embodiments, although not illustrated, a stapling instrument can include more than two actuator knobs which can be selectively utilized to motivate a pusher bar and/or knife blade assembly. In effect, as a result of the above, the actuator knobs of a surgical instrument can be engaged with a pusher bar assembly independently of each other.

**[0167]** In various embodiments, further to the above, the actuator knobs of a stapling instrument can be situated in a first position in which they can be held in position and held out of operative engagement with a pusher bar assembly. In at least one embodiment, referring to FIG. **24**, stapling instrument **201** can further include guide member **209** which can be configured to guide actuator knobs **214** as they are rotated between their first and second positions. In various embodiments, referring to FIGS. **24-26**, guide member **209** can include guide rails **211** which can be slidably received within grooves **213** of actuator knobs **214** such that, when actuator knobs **214** are rotated, guide member **209** can dictate the path along which the actuator knobs **214** are moved. Furthermore, guide rails **211** and grooves **213** can comprise interlocking features which can cooperatively prevent actuator knobs **214** from being unintentionally displaced proximally and/or distally, for example. In at least one such embodiment, guide member **209** can prevent one or more of actuator knobs **214** from being translated along with pusher bar assembly **210** when pusher bar assembly **210** is advanced distally as described above. In various embodiments, a slight friction or interference fit can be present between guide rails **211** and grooves **213** such that the possibility that actuator knobs **214** may be unintentionally rotated into their extended positions can be reduced. Although not illustrated, the actuator knobs can include guide rails extending therefrom which can be slidably received in grooves within the guide member, for example. In any event, referring to FIG. **25**, guide member **209** can include one or more retention members **215** which can be configured to retain guide member **209** in position intermediate upper handle **226** and lower handle **228**. Furthermore, referring to FIGS. **24** and **25**, guide member **209** can include aperture **217** which can be configured to receive retention pin **219** extending therethrough wherein retention pin **219** can be configured to be engaged with upper handle **226** and/or lower handle **228** to retain guide member **209** in position.

**[0168]** In various embodiments, as actuator knobs **214** are rotated between their first and second positions as described above, grooves **213** can be rotated out of engagement with guide rails **211** and actuator knobs **214** can be operatively engaged with pusher bar assembly **210**. In at least one embodiment, referring primarily to FIG. **24**, pusher bar assembly **210** can include a first clutch feature, such as slots or grooves **205**, for example, and actuator knobs **214** can each include a second clutch feature, such as projections **207**, for example, wherein the first and second clutch features can be operatively engaged with each other in order to operatively engage one or more of actuator knobs **214** with pusher bar assembly **210**. In at least one such embodiment, projections **207** can be closely received within slots **205** such that, when a force is applied to one or more of actuator knobs **214**, the

force can be transmitted to pusher bar assembly **210** through projections **207** and the sidewalls of slots **205**. In at least one embodiment, similar to the above, a slight friction or interference fit can be present between projections **207** and slots **205** to hold actuators **214** in their extended position. In any event, although not illustrated, the first clutch feature can include projections extending from the pusher bar assembly which can be configured to be received within recesses or slots within the actuator knobs. In addition to or in lieu of the above, referring to FIG. **24**, pusher bar assembly **210** can further include second guide rails **221** which can be configured to be slidably received within slots or grooves **223** within actuator knobs **214**, wherein rails **221** and grooves **223** can be configured to guide actuator knobs **214** into their second position and/or transmit forces from actuator knobs **214** to pusher bar assembly **210** once they are in their second position. Similar to guide rails **211**, guide rails **221** can be configured to create a slight friction or interference fit with grooves **223** to hold actuator knobs **214** in position. Further to the above, in various embodiments, actuator bar **210** can include post **225** about which actuator knobs **214** can be rotated. In at least one embodiment, actuator knobs **214** can include recesses **227** which can be contoured such that the sidewalls of recesses **227** can closely receive and slide around post **225** and, as a result, post **225** can guide actuator knobs **214** as they are rotated between their first and second positions, for example.

**[0169]** In various embodiments of the present invention, a stapling instrument can include an actuator knob which can be configured to be selectively advanced along a first side of the stapling instrument and a second side of the stapling instrument. In at least one embodiment, referring to FIGS. **29** and **30**, stapling instrument **320** can include an upper handle **326**, a lower handle **328**, and an actuator knob **314**, wherein actuator knob **314** can, similar to the above, be configured to advance a pusher bar assembly within a staple cartridge. In at least one embodiment, upper handle **326** and lower handle **328** can define first slot **327** and second slot **329** therebetween, wherein slots **327** and **329** can both be configured to permit actuator knob **314** to slide therethrough. More particularly, in various embodiments, actuator knob **314** can be configured such that it can be selectively slid through first slot **327** along first side **301** or, alternatively, through second slot **329** along second side **303**. In various embodiments, referring to FIG. **31**, stapling instrument **320** can further include third slot **331** which can be configured to allow actuator knob **314** to be moved from one side of the stapling instrument to the other. In at least one such embodiment, as a result, a surgeon can selectively position actuator knob **314** such that, if it appears that actuator knob **314** may impinge on tissue if it is advanced distally on one side of the stapling instrument, actuator knob **314** can rotated over to the other side of the stapling instrument before it is advanced. Although the first and second sides of the illustrated embodiment are located on opposite sides of surgical instrument **320**, other embodiments are envisioned where the first and second slots, for example, are located on adjacent sides and/or sides which are not directly opposite to each other. Furthermore, other embodiments are envisioned in which the sides of a stapling instrument are not readily discernable, such as instruments having round and/or arcuate portions.

**[0170]** In various embodiments, referring primarily to FIG. **29**, first slot **327** can be configured such that it defines a path for actuator knob **314** which is parallel to, or at least substantially parallel to, a path defined by second slot **329**. In at least one embodiment, third slot **331** can be configured to connect first slot **327** and second slot **329** such that it can define a path for actuator knob **314** which is perpendicular to, or at least substantially perpendicular to, the paths defined by slots **327** and **329**. In such embodiments, actuator knob **314** can be rotated over the top of the surgical instrument to move actuator knob **314** from first side **301** to second side **303**. In the event that a surgeon decides to reposition actuator knob on first side **301**, the surgeon can move actuator knob **314** back through slot **311** until it is positioned within first slot **327** once again. In various alternative embodiments, although not illustrated, a third slot can define a path for actuator knob **314** which is parallel to, or at least substantially parallel to, and/or co-planar with, or at least substantially co-planar with, the paths defined by slots **327** and **329**. In further various embodiments, a third slot can define a path which is skew with respect to the paths defined by slots **327** and **329**. In any event, a third slot can be configured connect first and second slots such that an actuator knob can be slid therewithin.

**[0171]** As outlined above, stapling instrument **320** can include a pusher bar assembly which can be operably engaged with actuator knob **314**, for example, such that actuator knob **314** can be configured to advance the pusher bar assembly distally. In various embodiments, referring to FIG. **33**, stapling instrument **320** can include pusher bar assembly **310** which can include a first portion **333** operably engaged with a knife assembly, for example, and, in addition, a second portion **335** which can be rotatably mounted to first portion **333**. In at least one embodiment, first portion **333** can define an axis **337** about which second portion **335** can be rotated. In at least one such embodiment, second portion **335** can include aperture **339** defined therein which can be configured to closely receive first portion **333**. In at least one embodiment, although not illustrated, pusher bar assembly **310** can further include one or more retaining members, such as set screws, for example, configured to extend into a groove in first portion **333**, for example, for retaining second portion **335** to first portion **333**. In various embodiments, second portion **335** can include mount **341** extending therefrom which can be configured to retain actuator knob **314** to second portion **335**. In order to move actuator knob from a first side of stapling instrument **320** to the another side, as described above, actuator knob **314** and second portion **335** can be rotated relative to first portion **333** such that actuator knob **314** can be selectively positioned within first slot **327** and second slot **329**. In at least one embodiment, although not illustrated, a stapling instrument can have more than two slots for receiving an actuator knob when it is advanced within a staple cartridge. In any event, in various alternative embodiments, first portion **333** and second portion **335** can be fixedly mounted together such that they are rotated together about axis **337**. In at least one such embodiment, first portion **333** can be configured to rotate relative to a substantially non-rotatable portion of pusher bar assembly **310**.

**[0172]** Referring to FIG. **34**, a surgical stapling instrument, generally **1100**, can comprise a first handle portion **1102** and a second handle portion **1104**. In various embodiments, first handle portion **1102** and second handle portion **1104** can be configured to be grasped by a surgeon, for example, and can comprise hand grip portion **1106**. In at least one embodiment, first handle portion **1102**, referring to FIGS. **35** and **36**, can include a first cover **1108** attached to a first frame **1110** and, similarly, second handle portion **1104** can include a second

cover **1112** attached to a second frame **1114**. Covers **1108** and **1112** can be ergonomically contoured, or otherwise suitably contoured, to assist a surgeon in manipulating stapling instrument **1100** within a surgical site. In various embodiments, handle covers **1108** and **1112**, for example, can include enlarged protrusions **1109** and **1113**, respectively, which can facilitate the insertion of stapling instrument **1100** into a surgical site. In various embodiments, handle covers **1108** and **1112** can be made of plastic, lightweight materials, and/or any other suitable material, for example, while handle frames **1110** and **1114** can be made of stainless steel, titanium, and/or any other suitable material, for example.

**[0173]** In various embodiments, referring again to FIGS. **34-37**, the distal ends of handle portions **1102** and **1104** can comprise an end-effector **1120** which can be configured to treat tissue within a surgical site, for example. In at least one such embodiment, end-effector **1120** can include a staple cartridge channel **1122** configured to receive and/or retain a staple cartridge as described in greater detail further below. In certain embodiments, staple cartridge channel **1122** can comprise a one-piece elongated channel-shaped frame extending from first handle portion frame **1110**. In at least one embodiment, staple cartridge channel **1122** can include a pair of opposed, elongated side walls **1124** connected by a bottom wall **1126**. Along the rearward, or proximal, portion of staple cartridge channel **1122**, a pair of spaced, upstanding side flanges **1128** can extend upwardly from opposed side walls **1124**. In various embodiments, the width of staple cartridge channel **1122** between side flanges **1128** can be greater than the width of the upper jaw member, or anvil, **1130** extending from second handle portion **1104**. In at least one embodiment, the distance between flanges **1128** can be configured to permit at least a portion of anvil **1130** to be received between side flanges **1128** when the stapling instrument is assembled for operation. As shown in FIG. **35**, each side flange **1128** of can include a notch, or recess, **1127**, for example, which can be configured to receive one or more latch projections **1131**, for example, extending from anvil **1130**, and/or any other suitable portion of second handle portion **1104**, as described in greater detail further below.

**[0174]** As indicated above, referring once again to FIGS. **34-37**, staple cartridge channel **1122** can be configured to support and/or retain a staple cartridge, such as staple cartridge **1150**, for example, within end-effector **1120**, wherein the staple cartridge can include one or more staples (not illustrated) removably stored therein. In various embodiments, referring to FIGS. **41-43**, staple cartridge **1150** can include one or more staple cavities **1151** which can be configured to store staples in any suitable arrangement, such as in at least two laterally-spaced longitudinal rows, for example. In at least one embodiment, referring to FIGS. **42** and **43**, staple cartridge **1150** can include staple cartridge body **1152** and pan, or retainer, **1154**, wherein staple cartridge body **1152** and/or pan **1154** can be configured to define a channel, or path, for slidably receiving a staple sled and/or cutting member therein. In at least one embodiment, pan **1154** can include flexible arms **1155**, for example, which can be configured to engage staple cartridge body **1152** in a snap-fit and/or press-fit arrangement. Referring to FIGS. **43-45**, staple cartridge **1150** can further include staple sled assembly **1160** which can include staple sled portion **1162** and, in addition, cutting member **1164**. In various embodiments, cutting member **1164** can include cutting edge **1165** and lock arm **1166**, for example, wherein lock arm **1166** can be configured to be press-fit and/or snap-fit into aperture **1163** in staple sled **1162** when cutting member **1164** is assembled to staple sled portion **1162**. In other various embodiments, staple sled portion **1162** can be integrally molded to cutting member **1164**.

**[0175]** Further to the above, referring to FIGS. **41-43**, staple cartridge body **1152** can include a slot, such as slot **1156**, for example, which can be configured to receive at least a portion of cutting member **1164** therein, and/or any other portion of staple sled assembly **1160** and pusher bar assembly **1200** (discussed below), wherein slot **1156** can be configured to permit cutting member **1164** to be moved between first and second positions within staple cartridge **1150**. In various embodiments, slot **1156** can be configured to permit cutting member **1164** to be moved between a proximal position (FIG. **43**) and a distal position in order to incise tissue positioned intermediate staple cartridge **1150** and anvil **1130**, for example. Referring again to FIGS. **43-45**, staple sled portion **1162** can include cam, ramp, or actuator, surfaces **1167** which can be configured to engage staple drivers positioned within staple cartridge **1150**. In various embodiments, referring to FIG. **42**, staple cartridge **1150** can include staple drivers **1168** which can be lifted, or slid, upwardly within staple cavities **1151** by sled portion **1162** such that the upward movement of staple drivers **1168** can eject, or deploy, staples at least partially positioned within staple cavities **1151**. While staple drives **1168** can be, in fact, lifted vertically upwardly, the term upward, and the like, can mean that staple drivers **1168**, for example, are moved toward the top surface, or deck, **1158** of the staple cartridge and/or toward anvil **1130**, for example. In certain embodiments, as illustrated in FIG. **42**, each staple driver **1168** can include one or more sloped surfaces **1169** oriented at the same angle as a cam surface **1167**, and/or any other suitable angle, which can provide a relatively flat, or at least substantially flat, sliding contact surface between staple sled **1162** and staple drivers **1168**. In various embodiments, a staple driver can be configured to deploy only one staple, while, in certain embodiments, a staple driver can be configured to simultaneously deploy two or more staples located in adjacent rows, for example. Other devices are disclosed in U.S. patent application Ser. No. 12/030,424, entitled SURGICAL STAPLING INSTRUMENT WITH IMPROVED FIRING TRIGGER ARRANGEMENT, which was filed on Feb. 13, 2008, the entire disclosure of which is incorporated by reference herein.

**[0176]** In various embodiments, as described above, a surgical stapling instrument can include a cutting member/staple sled assembly configured to incise tissue and deploy staples from a staple cartridge. In certain embodiments, though, a surgical stapling instrument may not require, or include, a cutting member. In at least one such embodiment, a staple cartridge can include a staple sled positioned therein and/or a surgical instrument can be configured to move a staple sled into a staple cartridge in order to staple tissue, for example, without otherwise dissecting it. In certain other embodiments, a staple cartridge can include a staple sled positioned therein where a surgical instrument can include a cutting member movable into, or relative to, the staple cartridge. In at least one such embodiment, the cutting member can be advanced into contact with the staple sled such that the cutting member and staple sled can be advanced together. Thereafter, the cutting member can be sufficiently retracted to allow the staple cartridge to be detached from the surgical instrument and replaced with a new staple cartridge having a new staple sled. Such embodiments may be useful when a staple sled

may become worn or deformed during use. Other embodiments are envisioned where a staple cartridge can include a cutting member positioned therein where a surgical instrument can include a staple sled movable into, or relative to, the staple cartridge. In at least one such embodiment, similar to the above, the staple sled can be advanced into contact with the cutting member such that the cutting member and staple sled can be advanced together. Thereafter, the staple sled can be sufficiently retracted to allow the staple cartridge to be detached from the surgical instrument and replaced with a new staple cartridge having a new cutting member. Such embodiments may be useful when a cutting member may become worn or deformed during use. In various embodiments, as described in greater detail below, the staple cartridge can include a protective housing or cover configured to prevent, or at least reduce the possibility of, a surgeon or other clinician from touching the cutting member positioned within the staple cartridge while handling the staple cartridge, for example.

**[0177]** In various embodiments, further to the above, staple cartridge channel **1122** and/or staple cartridge **1150**, for example, can include one or more co-operating projections and/or recesses, for example, which can be configured to removably retain staple cartridge **1150** within staple cartridge channel **1122**. Once staple cartridge **1150** has been inserted into staple cartridge channel **1122**, in various embodiments, the first handle portion **1102** can be assembled to the second handle portion **1104**. In other various embodiments, the staple cartridge may be inserted into the staple cartridge channel after the first and second handle portions have been assembled together. In either event, referring to FIGS. **34-41**, first handle portion **1102** and second handle portion **1104** can include proximal ends **1103** and **1105**, respectively, which can be assembled together such that the first and second handle portions can be rotatably or pivotably coupled to one another. In various embodiments, referring to FIGS. **35** and **36**, first handle portion **1102** can include one or more pins, or projections, **1111** extending therefrom which can be configured to be slidably received within one or more grooves, channels, or slots **1115** in second handle portion **1104**. In certain embodiments, slots **1115** can be defined in second handle frame **1114** and projections **1111** can extend from a proximal end post **1107** extending from first handle frame **1110**, for example. In order to assemble first handle portion **1102** and second handle portion **1104**, referring to FIG. **37**, the open ends of slots **1115** can be aligned with projections **1111** such that second handle portion **1104**, for example, can be translated relative to first handle portion **1102** and projections **1111** can be slid within slots **1115**. In at least one embodiment, as illustrated in FIGS. **35** and **36**, the open ends of slots **1115** can be located proximally with respect to their closed ends. In at least one such embodiment, proximal end **1105** of second handle portion **1104** can be positioned distally with respect to proximal end **1103** of first handle portion **1102** such that second handle portion **1104** can be moved proximally in order to position projections **1111** within slots **1115**. In various other circumstances, first handle portion **1102** can be positioned proximally with respect to second handle portion **1104** and slid distally in order to position projections **1111** within slots **1115**.

**[0178]** In various embodiments, referring to FIG. **38**, second handle portion **1104** can be rotated toward first handle portion **1102** such that anvil **1130** can be moved into position relative to staple cartridge **1150** and/or staple cartridge channel **1122**. In certain embodiments, first handle portion **1102** can be rotated toward second handle portion **1104** and/or the first and second handle portions can be rotated toward each other. In any event, projections **1111** and slots **1115**, when engaged with one another, can comprise a pivot about which one or both of the first and second handle portions can be moved relative to each other. In various embodiments, second handle portion **1104** can be moved relative to first handle portion **1102** such that anvil **1130** is moved into close opposition to staple cartridge **1150**. In certain embodiments, referring to FIG. **39**, second handle portion **1104** can be moved relative to first handle portion **1102** such that latch projections **1131** extending from second handle portion **1104** can be aligned with and/or inserted into recesses **1127** within first handle portion **1102**. In various embodiments, referring primarily to FIGS. **35** and **36**, first handle portion **1102** can further include latching mechanism **1180** rotatably mounted thereto which can be utilized to engage latch projections **1131** extending from second handle portion **1104** and secure the first and second handle portions together. Although not illustrated, other embodiments are envisioned in which a latching mechanism is rotatably mounted to the second handle portion and latch projections can extend from the first handle portion. In any event, in at least one embodiment, latching mechanism **1180** can be mounted to first frame **1110** by one or more pivot pins **1182** which can be configured to define an axis about which latch **1180** can be rotated.

**[0179]** In certain embodiments, referring now to FIGS. **37** and **38**, latching mechanism **1180** can include latch frame **1184** and, in addition, latch cover **1186** assembled to latch frame **1184**. In other various embodiments, the latch cover and the latch frame can comprise an integral unit or, in certain embodiments, the latching mechanism may not even include a cover. In certain embodiments, latch frame **1184** can be channel-shaped and can include a pair of opposed, elongated side walls **1185** which are spaced apart by a distance sufficient to span first frame portion **1110**. In at least one embodiment, latch cover **1186** can be made of plastic, lightweight materials, and/or any other suitable materials, for example, while latch frame **1184** can be made of stainless steel and/or any other suitable material, for example. In certain embodiments, when latching mechanism **1180** is closed, as illustrated in FIG. **40**, latch cover **1186** can be aligned with first handle cover **1108**. Latch cover **1186** can include contoured portion **1187** which can be configured to assist a surgeon in manipulating surgical instrument **1100** wherein, in at least one embodiment, contoured portion **1187** can be aligned with, or at least substantially aligned with, protrusion **1109** extending from first handle cover **1108**. Latching mechanism **1180** can further include one or more latch arms **1188** extending therefrom which can be configured to engage one or more latch projections **1131** extending from second handle portion **104** and pull and/or secure projections **1131** within recesses **1127** as illustrated in FIG. **40**. In at least one embodiment, at least one of latch arms **1188** can be integrally-formed with latch frame **1184**. In certain embodiments, referring to FIG. **39**, at least one of latch arms **1188** can include a distal hook **1189** which can be configured to wrap around at least a portion of projections **1131** so as to encompass or surround, or at least partially encompass or surround, projections **1131**. In at least one embodiment, latch arms **1188** can act as an over-center latch to maintain latching mechanism **1180** in its latched, or closed, position.

**[0180]** In use, in various circumstances, one of the first handle portion **1102** and the second handle portion **1104** can be positioned on a first side of tissue within a surgical site and the other handle portion can be rotated into position on the opposite side of the tissue. In such embodiments, staple cartridge **1150** can be positioned on one side of the tissue and anvil **1130** can be positioned on the other side of the tissue. Thereafter, as also outlined above, latching mechanism **1180** can be actuated such that it can be moved between an open position and a closed position in order to latch second handle portion **1104** to first handle portion **1102** and apply a clamping force to the tissue positioned between staple cartridge **1150** and anvil **1130**. In certain circumstances, latching mechanism **1180** can be moved between an open position (FIG. **38**), a partially-closed, or intermediate, position (FIG. **39**), and a closed position (FIG. **40**). In at least one such embodiment, referring to FIGS. **38** and **39**, latching mechanism **1180** can be moved between an open position in which latch arms **1188** are not engaged with projections **1131** and a partially-closed position in which latch arms **1188** are engaged with projections **1131** such that, although anvil **1130** has been at least partially brought into opposition to staple cartridge **1150**, a sufficient gap can remain between anvil **1130** and staple cartridge **1150** which can allow end-effector **1120** to be repositioned relative to the tissue, for example. Once the anvil **1130** and staple cartridge **1150** have been sufficiently positioned relative to the tissue, latching mechanism **1180** can be moved between its partially-closed position and a closed position, as illustrated in FIG. **40**.

**[0181]** In various embodiments, further to the above, a surgical stapling instrument can further include a biasing member which can be configured to bias the first handle portion of a stapling instrument away from a second handle portion. In at least one embodiment, as described in greater detail further below, a spring, and/or any suitably resilient material, can be positioned intermediate the first and second handle portions such that the anvil and staple cartridge of the stapling instrument can be biased away from each other. In certain embodiments, the spring can be configured to at least partially separate the first and second handle portions such that a gap exists between the anvil and the staple cartridge, wherein the gap can be sufficient to allow tissue to be positioned therebetween. In use, a surgeon can position such a surgical stapling instrument without having to separate and hold the first and second handle portions apart from each other. Such an instrument may be especially useful when the stapling instrument is in a partially-closed configuration and the surgeon is manipulating the instrument within a surgical site. After the surgeon is satisfied with the positioning of the stapling instrument, the surgeon can compress and/or disengage the spring and place the stapling instrument in a closed configuration.

**[0182]** In various circumstances, as outlined above, the distal end of first handle portion **1102** can be moved relative to the distal end of second handle portion **1104**, especially when latching mechanism **1180** is not engaged with, or only partially engaged with, projections **1131** of second handle portion **1104**. In such circumstances, projections **1111** and slots **1115** at the proximal ends of the first and second handle portions can be configured to retain at least the proximal ends of the first and second handle portions together when the distal ends of the first and second handle portions are being moved relative to each other, for example. Stated another way, projections **1111** and slots **1115** can cooperate to prevent, or at least inhibit, first handle portion **1102** from becoming completely detached from second handle portion **1104**. In certain embodiments, a first handle portion can include a first lock portion and a second handle portion can include a second lock portion, wherein the first and second lock portions can be configured to be engaged with one another and prevent the first handle portion from becoming completely detached from the second handle portion. In at least one embodiment, projections **1111** can comprise the first lock portion and slots **1115** can comprise the second lock portion. Previous stapling instruments lacked such lock portions and instead relied on a sole latching mechanism to keep the first and second handle portions together. In circumstances where the latching mechanisms of these previous stapling instruments were not fully engaged with both of the first and second handle portions, the first and second handle portions could become completely detached from one another, thereby requiring a surgeon, for example, to reposition and reassemble the handle portions. In certain circumstances, a complete detachment of the first and second handle portions of these previous staples could expose at least a portion of a cutting member.

**[0183]** In various embodiments, as outlined above, latching mechanism **1180** can be configured to be moved between an open position, a partially-closed position, and a closed position. When latching mechanism **1180** is in its open position, as also outlined above, projections **1111** can be inserted into and/or removed from slots **1115**. When latching mechanism **1180** is in its partially-closed position, referring to FIG. **39**, latch arms **1188** can be configured to engage latch projections **1131** such that projections **1111** cannot be removed from slots **1115**. In at least one such embodiment, latch arms **1188** and latch projections **1131** can be configured to prevent, or at least inhibit, second handle portion **1104** from being moved distally with respect to first handle portion **1102** and, as a result, prevent, or at least inhibit, projections **1111** from being disengaged from slots **1115**. Correspondingly, latch arms **1188** and latch projections **1131** can be configured to prevent first handle portion **1102** from being moved proximally with respect to second handle portion **1104**. Similar to the above, in various embodiments, latch arms **1188** and latch projections **1131** can also be configured to prevent, or at least inhibit, projections **1111** from being removed from slots **1115** when latching mechanism **1180** is in its closed position (FIG. **40**). In certain embodiments, further to the above, latch projections **1131** can extend from second handle portion **1104** at a location which is intermediate its proximal and distal ends. In at least one such embodiment, projections **1111** and slots **1115** can be configured to hold the first and second handle portions together at their proximal ends while latching mechanism **1180** can be utilized to hold the first and second handle portions together at an intermediate location. In any event, in certain embodiments, the first and second handle portions cannot be disengaged from one another unless latching mechanism **1180** is moved into its fully open position. In at least one such embodiment, projections **1111** and slots **1115** cannot be disengaged from one another when latching mechanism **1180** is in a closed and/or partially-closed position.

**[0184]** Once anvil **1130** and staple cartridge **1150** have been sufficiently positioned, the tissue positioned intermediate anvil **1130** and staple cartridge **1150** can be stapled and/or incised. In various embodiments, referring to FIG. **36**, surgical stapling instrument **1100** can further include pusher bar assembly **1200** which can be configured to advance and/or retract staple sled assembly **1160** within staple cartridge

1150, for example. In at least one embodiment, pusher bar assembly 1200 can include pusher bar 1202 and firing actuator 1204, wherein firing actuator 1204 can be configured to move pusher bar 1202 and staple sled assembly 1160 distally to deploy staples from staple cartridge 1150 and deform the staples against anvil 1130 as described above. In at least one embodiment, referring to FIGS. 44 and 45, staple sled 1162 can include a groove, channel, or slot 1161 which can be configured to receive, and can be operably connected to, a distal end 1201 (FIG. 36) of pusher bar 1202. In certain embodiments, staple sled assembly 1160 can be operably engaged with pusher bar 1202 when staple cartridge 1150 is inserted into staple cartridge channel 1122. In at least one embodiment, distal end 1201 and slot 1161 can include cooperating features which can allow distal end 1201 and slot 1161 to be assembled in a transverse direction but prevent, or at least inhibit, distal end 1201 and slot 1161 from being disassembled from one another in a proximal direction and/or distal direction. In other embodiments, pusher bar 1202 can be advanced distally before contacting and engaging staple sled assembly 1160. In at least one such embodiment, the staple sled assembly 1160 can remain stationary until contacted by pusher bar 1202. In any event, as outlined above, actuator 1204 can be operably connected to pusher bar 1202 such that a pushing and/or pulling force can be applied to actuator 1204 and transmitted to pusher bar 1202. In certain embodiments, as described in greater detail below, actuator 1204 can be pivotably connected to a proximal end 1203 of pusher bar 1202 such that actuator 1204 can be selectively rotated between at least first and second positions.

[0185] Further to the above, referring to FIGS. 34, 46, and 47, actuator 1204 can be movable between a first position on a first side 1116 of surgical stapling instrument 1100 (FIG. 46), a second position on a second side 1117 (FIG. 47), and an intermediate position (FIG. 34) located at the proximal ends 1103 and 1105 of the first and second handle portions 1102 and 1104. Once actuator 1204 has been rotated into position on one of the first and second sides 1116, 1117, actuator 1204 can be advanced distally. In various circumstances, as a result, a surgeon may select whether to move actuator 1204 distally along first side 1116 or second side 1117. Such circumstances may arise when it is more likely that actuator 1204 may impinge on tissue surrounding the surgical site, for example, when actuator 1204 is moved distally along one side of the surgical instrument as compared to the other. In various embodiments, referring to FIGS. 35 and 36, actuator 1204 can include arm 1206 extending therefrom where arm 1206 can be pivotably mounted to proximal end 1203 of pusher bar 1202. In certain embodiments, referring once again to FIGS. 34, 46, and 47, surgical instrument 1100 can include a first slot (not illustrated) extending along first side 1116 and a second slot 1118 extending along second side 1117, wherein the first and second slots can be configured to slidably receive at least a portion of actuator 1204. In at least one embodiment, the sidewalls of the first and second slots can confine, or at least assist in confining, the movement of actuator 1204 such that it can be moved along a predetermined path. Referring to FIG. 47, second slot 1118, for example, can be defined between first handle portion 1102 and second handle portion 1104 such that, when actuator 1204 is moved distally along second side 1117, arm 1206 of actuator 1204 can be slid intermediate the first and second handle portions. Similar to the above, the first slot can also be defined intermediate the first and second handle portions. In various embodiments, referring again to FIGS. 46 and 47, surgical instrument 1100 can further include intermediate slot 1119 which can also be configured to allow arm 1206, and/or any other suitable portion of actuator 1204, to slide therein. In at least one such embodiment, intermediate slot 1119 can connect the first and second slots such that, when actuator 1204 is positioned in its intermediate position, actuator 1204 can be moved into either one of its first and second positions. In certain embodiments, the first slot, second slot 1117, and intermediate slot 1119 can be parallel, or at least substantially parallel, to one another and/or lie in the same plane, although other embodiments are envisioned in which one or more of the slots is not parallel to the others and/or lies in a different plane. Furthermore, although the first and second sides of the illustrated embodiment are located on opposite sides of surgical instrument 1100, other embodiments are envisioned where the first and second slots, for example, are located on adjacent sides and/or sides which are not directly opposite to each other. Furthermore, other embodiments are envisioned in which the sides of a stapling instrument are not readily discernable, such as instruments having round and/or arcuate portions.

[0186] In various embodiments, further to the above, surgical stapling instrument 1100 can further include a locking mechanism which can prevent, or at least inhibit, actuator 1204 and, correspondingly, staple sled assembly 1160, from being advanced prematurely. In at least one embodiment, the locking mechanism can be configured to prevent, or at least inhibit, actuator 1204 from being advanced distally prior to latching mechanism 1180 being moved into a closed, or an at least partially-closed, position. In certain embodiments, generally referring to FIG. 38, surgical stapling instrument 1100 can further including locking mechanism 1220 which can be engaged with actuator 1204 and can remain engaged with actuator 1204 while latching mechanism 1180 is in a fully open position (FIG. 38) and/or an at least substantially-open position. In various embodiments, locking mechanism 1220 can include lock 1222 which can be biased into engagement with actuator 1204 by a biasing force applied thereto by lock spring 1224, for example. In at least one such embodiment, actuator 1204 can include one or more grooves, channels, or slots (not illustrated) which can be configured to receive at least a portion of lock 1222. In use, locking mechanism 1220 can hold actuator 1204 in position until latching mechanism 1180 is moved into its fully closed position (FIG. 40) and/or an at least substantially closed position. In such circumstances, in at least one embodiment, latching mechanism 1180 can be configured to engage locking mechanism 1220 and disengage lock 1222 from actuator 1204. In at least one such embodiment, referring to FIGS. 38-40, latching mechanism 1180 can further include cam 1183 which can be configured to engage cam surface 1223 on lock 1222 when latching mechanism 1180 is moved into its closed position and, as a result, slide, and/or otherwise move, lock 1222 away from actuator 1204. In various embodiments, cam 1183 can comprise a wall, rib, and/or ridge extending from latch cover 1186 and/or latch frame 1184. In any event, once lock 1222 has been sufficiently disengaged from actuator 1204, in at least one embodiment, actuator 1204 can be moved from its intermediate position, illustrated in FIG. 34, into one of its first and second positions, as illustrated in FIGS. 46 and 47.

[0187] As described above, locking mechanism 1220 can be configured to prevent, or at least inhibit, drive bar 1202 from being advanced distally prior to latching mechanism 1180 being moved into a predetermined position, such as, for

example, a closed position and/or partially-closed position. Advantageously, locking mechanism **1220** may also prevent, or at least inhibit, staple sled assembly **1160** from being advanced prior to the first handle portion **1102** and the second handle portion **1104** being assembled together. In effect, locking mechanism **1220** can prevent tissue positioned intermediate anvil **1130** and staple cartridge **1150** from being cut and/or stapled prior to anvil **1130** and staple cartridge **1150** being properly positioned relative to the tissue. Also, in effect, locking mechanism **1220** can prevent staples from being deployed into the tissue prior to an appropriate clamping force being applied to the tissue. In any event, when latching mechanism **1180** is returned to its fully open position, and/or a partially-open position, cam **1183** can be moved away from lock **1222** such that lock spring **1124** can bias lock **1222** into engagement with actuator **1204** once again. In various other embodiments, referring to FIGS. **38** and **39**, locking mechanism **1220'** can include a lock **1222'** comprising a cam surface **1223'** and, in addition, a stop **1226'** which can limit the relative movement of lock **1222'**. In at least one embodiment, cam **1183**, for example, can be configured to contact cam surface **1223'** and, owing to the contoured, beveled, and/or angled surface of cam surface **1223'**, cam **1183** can be configured to drive lock **1222'** distally as illustrated in FIG. **49**. Lock **1222'** can be driven distally such that pin **1228'**, which extends from lock **1222'**, can be moved between a first position (FIG. **48**) in which it is positioned within aperture **1229'** in actuator **1204'** and a second position (FIG. **49**) in which pin **1228'** has been sufficiently removed from aperture **1229'**. In various embodiments, stop **1226'** can be configured such that, as lock **1222'** is driven distally, stop **1226'** can come into contact with cam **1183** once lock **1222'** has been sufficiently displaced. In such embodiments, stop **1226'** can be configured to control the second, or displaced, position of lock **1222'**. Similar to the above, as actuator **1180** is moved out of its closed position and cam **1183** is disengaged from locking mechanism **1220'**, lock spring **1224'** can move lock **1222'** into engagement with actuator **1204'** once again.

**[0188]** In various embodiments, as described above, a firing actuator can be utilized to move a pusher bar, staple sled, and/or cutting member between first and second positions. As also described above, pusher bar assembly **1200**, for example, can be utilized to move a staple sled assembly, such as staple sled assembly **1160**, for example, between a proximal position (FIG. **43**) and a distal position. In certain embodiments, a staple cartridge, such as staple cartridge **1150**, for example, can include a staple sled assembly **1160** contained therein, wherein staple sled assembly **1160** can be positioned in a proximal position, as illustrated in FIG. **43**, when the staple cartridge is assembled to or inserted into staple cartridge channel **1122**. In at least one such embodiment, referring to FIGS. **41-43**, staple cartridge **1150** can include further housing **1170** which can be configured to cover at least a portion of cutting member **1164** when staple sled assembly **1160** is in its proximal position, for example. In various embodiments, housing **1170** can be configured to protect a surgeon, for example, when handling the staple cartridge, when inserting the staple cartridge into the surgical stapler, and/or assembling two or more portions of the surgical stapler together, for example. In at least one such embodiment, at least an upper portion of cutting edge **1165** can extend above deck, or top surface, **1158** of staple cartridge **1150** and, absent a protective housing, such as housing **1170**, for example, the upper portion of cutting edge **1165** may be exposed.

**[0189]** In various embodiments, as described above, cutting member **1165** can be at least partially positioned within slot, or channel, **1156** and, as illustrated in FIG. **43**, at least the upper, or top, portion of cutting member **1164** can extend above deck **1158**. In at least one embodiment, referring to FIGS. **41-43**, housing **1170** can include a first wall, or portion, **1172** extending from a first portion **1157** of staple cartridge body **1152**, a second wall, or portion, **1174** extending from a second portion **1159** of staple cartridge body **1152**, and a top wall, or portion, **1176** extending between first wall **1172** and second wall **1174**. In certain embodiments, a housing may comprise only one support wall, or support portion, extending from a staple cartridge body and, in addition, a top wall, or top portion, extending therefrom. In other embodiments, a housing may comprise one or more side walls, or portions, and no top wall. In at least one such embodiment, the side walls of the housing can be configured such that they extend above the top of the cutting member, or at least extend above a cutting edge of the cutting member, for example. In any event, as illustrated in FIG. **43**, at least a portion of cutting member **1164** can be positioned underneath top wall **1176** and/or between side walls **1172** and **1174** when staple sled assembly **1160** is in its proximal position. In certain embodiments, cutting member **1164** can be entirely positioned underneath top wall **1176**, and/or entirely positioned within housing **1170**. In at least one embodiment, cutting member **1164** can be positioned underneath top wall **1176** such that cutting surface **1165** does not extend beyond the distal edge **1175** and/or the proximal edge **1177** of top wall **1176**. In at least one embodiment, housing **1170** can include a rear wall **1178** which can be configured to limit the proximal movement of cutting member **1164** and/or any other portion of staple sled assembly **1160**. In various embodiments, at least a portion of housing **1170**, for example, can be integrally-formed with staple cartridge body **1152**. In at least one such embodiment, first wall **1172**, second wall **1174**, top wall **1176**, and/or rear wall **1178** can be formed when staple cartridge body **1152** is injection molded, for example. In certain embodiments, at least a portion of housing **1170** can be assembled to staple cartridge body **1152** via a snap-fit arrangement, press-fit arrangement, and/or any other suitable manner.

**[0190]** In various embodiments, further to the above, cutting member **1164** can be defined by a planar, or an at least substantially planar, body having a knife edge extending along at least one side of the cutting member body. In at least one such embodiment, first wall **1172** and/or second wall **1174** can be configured and arranged such that they can include planar, or at least substantially planar, interior surfaces **1173** which are parallel, or at least substantially parallel, to the side surfaces of cutting member **1164**. In certain embodiments, cutting member **1164** can be closely received between the interior surfaces **1173** of walls **1172** and **1174**. In at least one such embodiment, the distance between walls **1172** and **1174** may be the same as, or at least substantially the same as, the width of slot **1156**. In any event, a housing can be configured such that at least a portion of the housing extends over at least a portion of slot **1156**, for example. In certain embodiments, housing **1170** can completely enclose or surround a cutting member **1164** and/or cutting surface **1165**. In at least one embodiment, although not illustrated, a housing can include a break-away and/or incisable portion which can be at least partially detached, separated, and/or otherwise deformed in order to permit a cutting member to exit the housing. In at least one such embodiment, the tissue cutting

surface can be configured to contact the housing to break and/or incise a housing wall, for example. In various embodiments, the housing wall can include a thin portion, a reduced-thickness portion, score mark, and/or any other configuration to facilitate the deformation and/or incision of the housing wall. In certain embodiments, a cutting member can include one or more additional cutting surfaces and/or anvils, for example, which can be configured to deform and/or incise the housing. In at least one embodiment, the housing can include a movable and/or flexible portion, such as a hinged member and/or flexible flap, for example, which can be configured to sufficiently move and/or flex to allow the cutting member to pass thereby. In any event, embodiments are envisioned in which the cutting member can have any suitable configuration for incising tissue and the protective housing can have any suitable configuration for at least partially enclosing or surrounding the cutting member. Furthermore, although a cutting member can comprise a sharpened edge as described above, other suitable cutting members are envisioned, such as those supplied with an electrical current sufficient to dissect tissue, for example.

**[0191]** As described above, housing **1170** can be configured to at least partially cover, enclose, and/or surround a cutting member when it is in its proximal position. In various embodiments, the cutting member can be advanced distally to incise tissue, for example, and then retracted proximally in order to position the cutting member within housing **1170** once again. In such embodiments, the cutting member can be at least partially covered by housing **1170** when the staple cartridge is assembled to and removed from a surgical stapling instrument. In certain embodiments, a new, or unspent, staple cartridge can be inserted into the staple cartridge channel to replace the at least partially spent staple cartridge. In at least one such embodiment, the new staple cartridge can include a new cutting member and/or staple sled assembly positioned therein, although embodiments are envisioned in which the previously-used cutting member and/or staple sled assembly can be sufficiently withdrawn from the spent staple cartridge and advanced into the new staple cartridge in order to be reused once again. In embodiments where a new cutting member and/or staple sled assembly is provided with each new staple cartridge, a sharp cutting edge, for example, can be utilized with each staple cartridge.

**[0192]** In various embodiments, although not illustrated, a staple cartridge can include two or more housings configured to at least partially cover a cutting member when it is in two or more positions. In at least one embodiment, a staple cartridge can include a proximal housing configured to at least partially cover the cutting member when it is in a proximal position, for example, and, in addition, a distal housing configured to at least partially cover the cutting member when it is in a distal position, for example. In at least one such embodiment, the cutting member can be positioned within the proximal housing when the staple cartridge is assembled to a surgical stapling instrument and, in certain embodiments, the cutting member can be advanced into the distal housing after it has transected tissue positioned within the end-effector, for example. In such embodiments, as a result, the cutting member can be at least partially positioned within the distal housing when the staple cartridge is removed from the surgical stapler. Such embodiments may be particularly useful when a vessel, for example, is positioned intermediate the proximal housing and the distal housing of the staple cartridge. In various embodiments, although not illustrated, a cutting member can be moved proximally from a distal position to a proximal position, and/or any other suitable position.

**[0193]** In various embodiments, as discussed above, staple cartridge **1150** can be inserted into staple cartridge channel **1122**. Referring now to FIG. **92**, a proximal end **1213** of staple cartridge **1150** can be positioned within a proximal end **1123** of staple cartridge channel **1122** while a distal end **1211** of staple cartridge **1150** can be positioned within a distal end **1121** of staple cartridge channel **1122**. In at least one embodiment, the distal end **1121** of staple cartridge channel **1122** can comprise one or more projections and/or one or more recesses which can be correspondingly aligned with one or more projections and/or one or more recesses in the distal end **1211** of staple cartridge **1150**, for example. In at least one such embodiment, each sidewall **1124** of staple cartridge channel **1122** can comprise a projection, or tab, **1279** and a recess, or slot, **1278**, wherein each side of staple cartridge **1150** can comprise, referring to FIG. **95**, a projection **1274** configured to be positioned within a recess **1278** and, in addition, a recess **1270** configured to receive a projection **1279**. In various embodiments, each recess **1270** of staple cartridge **1150** can comprise opposing sidewalls **1272** and **1273** and a distal surface **1271**, wherein the distal surface **1271** can be positioned against the projection **1279** positioned therein when the staple cartridge **1150** is positioned in staple cartridge channel **1122**. In various circumstances, as discussed in greater detail below, the distal surfaces **1271** of recesses **1270** can serve as a datum surface from which certain features of the staple cartridge **1150** can be predetermined. In some circumstances, the distal end **1211** of staple cartridge **1150** can be aligned with and/or inserted into the distal end **1121** of staple cartridge channel **1122** before the proximal end **1213** of staple cartridge **1150** is inserted into the proximal end **1123** of staple cartridge channel **1122**. For example, the distal end **1211** of staple cartridge channel **1150** can be aligned with the staple cartridge channel **1122** such that projections **1279** are positioned within recesses **1270** wherein, thereafter, the staple cartridge **1150** can be rocked, or rotated, toward staple cartridge channel **1122** such that proximal end **1213** of staple cartridge **1150** is inserted into the proximal end **1123** of staple cartridge channel **1122**.

**[0194]** When distal end **1211** of staple cartridge **1150** is engaged with the distal end **1121** of staple cartridge channel **1122**, as described above, the projections **1274** of staple cartridge **1150** can be inserted into the recesses **1279** of staple cartridge channel **1122** by hooking the projections **1274** underneath the projections **1278** of staple cartridge channel **1122**. In such circumstances, the co-operation of projections **1274** and **1278** and recesses **1270** and **1279** can attach the distal end **1211** of staple cartridge **1150** to the distal end of staple cartridge **1122** and, in addition, align the staple cartridge **1150** with the staple cartridge channel **1122** such that the staple cartridge **1150** can be inserted between the sidewalls **1124** of staple cartridge channel **1122**. Once the distal end **1211** of staple cartridge **1150** has been hooked to staple cartridge channel **1122**, at least one of the staple cartridge **1150** and the staple cartridge channel **1122** can be rotated toward the other. In various circumstances, referring again to FIGS. **92** and **95**, the staple cartridge **1150** can be pivoted toward the staple cartridge channel **1122** such that alignment slots **1280** in staple cartridge channel **1150** become aligned with side flanges **1128**. In various embodiments, the staple cartridge **1150** can comprise alignment slots **1280** on opposite sides thereof which can each be configured to receive a

side flange **1128**. In at least one embodiment, each alignment slot **1280** can comprise lateral sidewalls **1283** and **1284** and a basewall **1281** extending between the sidewalls **1283** and **1284**. Further to the above, a predetermined distance **1289** can be measured between the distal datum surfaces **1271** of recesses **1270** to the distal basewalls **1281** of alignment slots **1280**. Referring now to FIGS. **93** and **95**, the predetermined distance **1288** between the distal end of the projections **1279** and the distal end of the side flanges **1128** can be such that it is shorter than the distance **1289** between the distal surfaces **1271** of recesses **1270** and the basewalls **1281** of alignment slots **1280**. Owing to the distance **1288** being shorter than the distance **1289**, the staple cartridge **1150** can be rotated into position as described above such that side flanges **1128** can enter into alignment slots **1280**. In various embodiments, alignment slots **1280** can be sized and configured such that the side flanges **1128** are closely received between the sidewalls **1283** and **1284** such that there is little, if any, relative movement between the side flanges **1128** and the sidewalls of the alignment slots **1280**, for example.

**[0195]** In various alternative embodiments, further to the above, the proximal end **1213** of the staple cartridge **1150** can be inserted into the distal end **1121** of staple cartridge channel **1122** and slid proximally between sidewalls **1124** such that the proximal end **1213** of staple cartridge channel **1150** enters into the proximal end **1123** of staple cartridge channel **1122**. During such sliding movement, the side flanges **1128** can enter into alignment slots **1280** and, in addition, the projections **1279** can enter into the recesses **1270**. In certain embodiments, the staple cartridge **1150** can be both slid and rotated into the staple cartridge channel **1122**. In any event, in various embodiments, the staple cartridge **1150** and the staple cartridge channel **1122** can be configured such that the staple cartridge **1150** can be removably secured within the staple cartridge channel **1122**. In at least one embodiment, referring primarily now to FIGS. **95** and **100**, the staple cartridge **1150** can comprise one or more retention features which can be configured to releasably engage one or more retention features in the staple cartridge channel **1122**. More particularly, in at least one such embodiment, the staple cartridge **1150** can comprise one or more retention slots **1190** which can be configured to engage one or more retention keys **1195** in the staple cartridge channel **1122**. In various embodiments, referring again to FIG. **95**, each retention slot **1190** can comprise a first, or entrance, portion **1191** which can be configured to receive a retention key **1195** therein and, in addition, a second portion **1192** which can be configured to receive the retention key **1195** after it has passed through the entrance portion **1191**. The entrance portion **1191**, in certain embodiments, can define a first width between a proximal side **1193** and a distal side **1194** of retention slot **1190** and, in addition, the second portion **1192** can define a second width between the proximal side **1193** and the distal side **1194** which is wider than the first width of entrance portion **1191**. In various embodiments, the first width of entrance portion **1191** can be narrower than the width of the retention key **1195** and the second width of second portion **1192** can be wider than the width of the retention key **1195**. In at least one such embodiment, a retention slot **1190** can be configured to engage a retention key **1195** in at least one of a pres-fit and/or a snap-fit manner. In certain embodiments, at least one of the proximal side **1193** and/or the distal side **1194** can be configured to flex or splay outwardly as the retention key **1195** is inserted into retention slot **1190**. In at least one such embodiment, the proximal sides **1193** can be displaced proximally. In any event, referring to FIG. **100**, once the retention slot **1190** has received the retention key **1195**, the proximal side **1193** of retention slot **1190** can be positioned on a proximal side **1196** of retention key **1195** and the distal side **1194** of retention slot **1190** can be positioned on a distal side **1197** of retention key **1195**.

**[0196]** As outlined above, the staple cartridge **1150** can be assembled into the staple cartridge channel **1122** by coupling the distal end **1211** of staple cartridge **1150** to the distal end **1121** of staple cartridge channel **1122** and then rotating the proximal end **1213** of staple cartridge **1150** into the proximal end **1123** of staple cartridge channel **1122**. In at least one such embodiment, the retention slots **1190** can be configured to engage the retention keys **1195** as the staple cartridge **1195** is rotated into its seated position within staple cartridge channel **1122**. Referring now to FIG. **93**, a predetermined distance **1199** between the distal datum surfaces **1271** of recesses **1270** and the retention slots **1190** can be sized and configured such that the retention slots **1190** are aligned with the retention keys **1195** as the staple cartridge **1150** is rotated into position as described above. Correspondingly, in at least one embodiment, a distance between the distal ends of projections **1279** and retention keys **1195** can be such that it equals, or at least substantially equals, the distance **1199**. In various circumstances, the above-mentioned distances can be measured to the center of the features comprising retention slots **1190** and retention keys **1195**. For example, the distance **1199** can be measured to a position in the center of slot **1190** intermediate the proximal and distal sidewalls thereof, for example. In various embodiments, the retention slot **1190** can further comprise lead-in, beveled, and/or radiused surfaces, which can be configured to guide, or direct, the retention keys **1195** into the retention slots **1190**. In at least one such embodiment, these lead-in surfaces can be wider than the first portions **1191**.

**[0197]** As staple cartridge **1150** is rotated into staple cartridge **1122**, a cutting member and/or staple deploying sled positioned within the staple cartridge **1150** can be operably engaged with the pusher bar **1202**. More particularly, referring now to FIGS. **97-99**, the staple cartridge **1150** can include a cutting member **1160** which can be operably coupled with pusher bar **1202** such that, after the staple cartridge **1150** has been seated within the staple cartridge channel **1122**, the pusher bar **1202** and cutting member **1160** can be advanced together as described above. In at least one embodiment, the cutting member **1160** can comprise a slot **1161** which can be configured to receive a distal drive projection **1294** (FIG. **93**) at the distal end of pusher bar **1202**. More particularly, referring now to FIG. **101**, the slot **1161** of cutting member **1160** can be aligned with an access slot **1290** in the bottom of the staple cartridge **1150** such that, as the proximal end **1213** of staple cartridge **1150** is seated in the proximal end **1123** of staple cartridge channel **1122**, the drive projection **1294** of pusher bar **1200** can extend through the access slot **1290** into the slot **1161** of cutting member **1160**. In various embodiments, the slot **1161** and the drive projection **1294** can be sized and configured such that there is little, if any, relative movement therebetween. More particularly, referring again to FIGS. **98** and **99**, the slot **1161** can comprise a distal sidewall **1291** and a proximal sidewall **1292** wherein the drive projection **1294** can be securely received between the sidewalls **1291** and **1292**. In various embodiments, referring again to FIGS. **93** and **101**, the pusher bar **1202** can

further comprise a recess, or slot, **1295** positioned proximally with respect to the drive projection **1294** wherein the slot **1295** can be configured to receive a proximal projection **1293** (FIG. **97**) extending from the cutting member **1160**. Similar to the above, the slot **1295** can be defined by sidewalls which can be configured to closely receive the proximal projection **1293** such that there is little, if any, relative movement therebetween.

**[0198]** As described above, the slot **1161** of cutting member **1160** can be positioned within the staple cartridge **1150** such that it is aligned with the drive projection **1294** of pusher bar **1202** when the staple cartridge **1150** is seated within the staple cartridge channel **1122**. Referring now to FIG. **96**, a predetermined distance **1299** can be defined between the distal surfaces **1271** of recesses **1270** and the slot **1161**, wherein the distance **1299** can be equal to, or at least substantially equal to, a predetermined distance **1297** between the distal end of the projections **1279** and the drive projection **1294**. In various circumstances, the cutting member **1160** can be moved through a range of positions between a proximal-most position, in which it is positioned in housing **1170**, and a distal-most position after it has been advanced through the cutting slot **1156**. In various embodiments, the distance **1299** can be measured with respect to the cutting member **1160** when it is in its proximal-most position. Similar to the above, the distances **1297** and **1299** can be measured to the center or midpoint of the drive projection **1297** and slot **1161**, respectively. In various embodiments, the surgical instrument **1100** can further comprise a locking mechanism which can be configured to hold the pusher bar **1202** in position while the cutting member **1160** is engaged with the drive projection **1294**. Similar to the above, in certain embodiments, a distance **1298** can be defined between the distal end of projections **1279** and the recess **1295** of pusher bar **1202** wherein the distance **1298** can be equal to, or at least substantially equal to, the distance between the distal surface **1271** of recesses **1270** and the projection **1293** of cutting member **1160**. In various embodiments, referring primarily now to FIGS. **97** and **100**, the staple cartridge **1150** can comprise a clearance region defined between the proximal end **1295** of the staple cartridge body **1152** and the proximal end **1294** of the staple cartridge pan **1154**, wherein such a clearance region can be configured to receive the pusher bar **1202** and/or a portion of the staple cartridge channel **1122** therein, for example. In any event, the pusher bar **1202** can be advanced distally once it has been engaged with cutting member **1160**, wherein such movement is depicted in FIG. **100** which illustrates the distal end **1201** of pusher bar **1202** in a proximal position (illustrated with solid lines) and a second, distal position (illustrated with phantom lines), for example.

**[0199]** In various embodiments, as described above, the distal end **1211** of staple cartridge **1150** can be engaged with the distal end **1121** of the staple cartridge channel **1122** and then pivoted into staple cartridge channel **1122** such that the proximal end **1213** of staple cartridge **1150** can be seated in the proximal end **1123** of staple cartridge channel **1122**. Such a process can comprise engaging the projections **1274** of staple cartridge **1150** underneath the projections **1276** of staple cartridge channel **1122** and then, as described above, rotating the staple cartridge **1150** until alignment slots **1280** are positioned adjacent to flanges **1182**. At such point, in various embodiments, the cutting member **1160** may not be engaged with the pusher bar **1202** and, in addition, the retention slots **1190** may not be engaged with the retention keys **1195**. As a result, the surgeon, or clinician, can adjust the position of the staple cartridge **1150** within the staple cartridge channel **1122** before the staple cartridge **1150** is locked into position. Once the side flanges **1182** have been at least partially positioned in alignment slots **1280**, the proximal end **1213** can be further rotated toward the staple cartridge channel **1122**. At such point, the cutting member **1160** can come into operable engagement with the pusher bar **1202** and, in addition, the retention slots **1190** can engage the retention keys **1195**. In various embodiments, the cutting member **1160** can operably engage the pusher bar **1202** at the same time, or at least substantially the same time, as the retention slots engage retention keys **1195**. More particularly, in at least one embodiment, the drive projection **1294** of pusher bar **1202** can enter slot **1161** of cutting member **1160** at the same time that the retention keys **1195** enter into, or snap into, the second portions **1192** of slots **1190**. In at least one such embodiment, the cutting member **1160** may not be advanceable by the pusher bar **1202** until the staple cartridge **1150** is snapped into, or seated in, place. In certain alternative embodiments, the cutting member **1160** can be operably engaged with the pusher bar **1202** before the retention keys **1195** are fully seated within the retention slots **1190** when the proximal end **1213** of the staple cartridge **1150** is seated in the proximal end **1123** of the staple cartridge channel **1122**. In various embodiments, the retention slots **1190** can be aligned with each other such that they engage the retention keys **1195** at the same time, or at least substantially the same time. In at least one such embodiment, the retention slots can be configured such that the retention keys **1195** enter into the second portions **1192** of the retention slots **1190** simultaneously. In at least one embodiment, the retention slots **1190** can be positioned along an axis which is transverse to or perpendicular to a longitudinal axis defined by the cutting slot **1156**. In various embodiments, the retention slots **1190**, and the axis defined therebetween, can be positioned proximally with respect to the cutting member **1160** regardless of the position of the cutting member **1160** including when the cutting member **1160** is in its proximal-most position, for example.

**[0200]** In various embodiments, the cutting slot **1156** can define a first body portion **1152***a* on a first side thereof and a second body portion **1152***b* on a second, or opposite, side thereof. Referring to FIGS. **95** and **98**, the first body portion **1152***a* can comprise a first plurality of staple cavities **1151** and, in addition, the second body portion **1152***b* can comprise a second plurality of staple cavities **1151**. In at least one embodiment, the first body portion **1152***a* can comprise a proximal-most staple cavity **1151***a* which can be positioned proximally relative to the other staple cavities **1151** in first body portion **1152***a*. In at least one embodiment, the entirety of staple cavity **1151***a* can be positioned proximally relative to base wall **1281** of the alignment slot **1280** in first body portion **1152***a*, while, in other embodiments, at least a portion of staple cavity **1151***a* can be positioned proximally relative to the base wall **1281**. As illustrated in FIG. **97**, the alignment slot **1280** in the first body portion **1152***a* is positioned laterally with respect to the proximal-most staple cavity **1151***a* and, in addition, laterally with respect to the cutting slot **1156**. Further to the above, the first body portion **1152***a* can comprise a second proximal-most staple cavity **1151***c* which can be positioned proximally relative to the other staple cavities **1151** in first body portion **1152***a* except for proximal-most staple cavity **1151***a*. In at least one embodiment, the entirety of staple cavity **1151***c* can be positioned proximally relative to

base wall **1281** of the alignment slot **1280** in first body portion **1152***a*, while, in other embodiments, at least a portion of staple cavity **1151***c* can be positioned proximally relative to the base wall **1281**. As illustrated in FIG. **97**, the alignment slot **1280** is the first body portion **1152***a* is at least partially positioned laterally with respect to the second proximal-most staple cavity **1151***c*. Still referring to FIG. **97**, the first body portion **1152***a* can comprise a retention slot **1190** therein which can be positioned proximally with respect to the staple cavities **1151** therein, including the staple cavities **151***a* and **1151***c*, for example.

**[0201]** Referring to FIG. **95**, further to the above, the second body portion **1152***b* can comprise a proximal-most staple cavity **1151***b* which can be positioned proximally relative to the other staple cavities **1151** in second body portion **1152***b*. In at least one embodiment, the entirety of staple cavity **1151***b* can be positioned proximally relative to base wall **1281** of the alignment slot **1280** in second body portion **1152***b*, while, in other embodiments, at least a portion of staple cavity **1151***b* can be positioned proximally relative to the base wall **1281**. As illustrated in FIG. **95**, the alignment slot **1280** in the second body portion **1152***b* is positioned laterally with respect to the proximal-most staple cavity **1151***b* and the cutting slot **1156**. Further to the above, the second body portion **1152***b* can comprise a second proximal-most staple cavity **1151***d* which can be positioned proximally relative to the other staple cavities **1151** in second body portion **1152***b* except for proximal-most staple cavity **1151***b*. In at least one embodiment, the entirety of staple cavity **1151***d* can be positioned proximally relative to base wall **1281** of the alignment slot **1280** in second body portion **1152***b*, while, in other embodiments, at least a portion of staple cavity **1151***d* can be positioned proximally relative to the base wall **1281**. As illustrated in FIG. **95**, the alignment slot **1280** in the second body portion **1152***b* is at least partially positioned laterally with respect to the second proximal-most staple cavity **1151***d*. Still referring to FIG. **95**, the second body portion **1152***b* can comprise a retention slot **1190** therein which can be positioned proximally with respect to the staple cavities **1151** therein, including the staple cavities **1151***b* and **1151***d*, for example.

**[0202]** In various embodiments, further to the above, the staple cartridge body **1152** can be comprised of plastic and can be formed utilizing an injection molding process. Thereafter, in various embodiments, the staple drivers **1168** (FIG. **42**) can be assembled into staple cavities **1151** and the cutting member **1160** can be positioned within the cartridge body **1152** such that the cutting member **1164** is located within housing **1170**, as described above. The staple cartridge pan **1154** can then be assembled to the staple cartridge body **1152**. In various embodiments, referring now to FIG. **96**, the distal end **1277** of staple cartridge pan **1154** can be aligned with the proximal end **1295** of the staple cartridge body **1152** such that the staple cartridge body can be slid within the staple cartridge pan **1154** between opposing walls **1154***a* and **1154***b*, for example. The staple cartridge body **1152** and pan **1154** can be slid relative to one another until pan projections **1276** are positioned within recesses **1270** and projections **1274** are positioned within pan recesses **1275**. At the same time, the lock projections **1288** extending from staple cartridge body **1152** can be received within the lock apertures **1287** in staple cartridge pan **1154** such that pan **1154** can be locked to staple cartridge body **1152**. In various embodiments, the sidewalls **1154***a* and **1154***b* of pan **1154** can flex or splay outwardly as they pass over lock projections **1288** and then elastically return inwardly when lock apertures **1287** are aligned with lock projections **1288**. At such point, the arms **1155** extending from pan **1154** can be aligned with and positioned within the retention slots **1287** in staple cartridge body **1152**. In certain embodiments, referring now to FIG. **101**, the staple cartridge **1150** can further comprise a retention member, such as retention member **1300**, for example, which can be configured to selectively obstruct slot **1301** in staple cartridge body **1152**, for example. In at least one embodiment, the retention member **1300** can comprise a pivotable arm **1303** which can be rotated between a first position in which it extends across slot **1301** (illustrated in solid lines) and a second position in which it is positioned adjacent to slot **1301** (illustrated in phantom lines). In at least one such embodiment, an integral pivot pin **1302** (FIG. **95**) can extend from arm **1303** into an aperture in staple cartridge body **1152** which can define an axis about which the arm **1303** can be rotated. In certain embodiments, the arm **1303** can include a lock member **1304** extending therefrom which can be configured to be releasably engaged with a lock cavity **1305** in staple cartridge body **1152** in order to hold the arm **1303** in at least one of its first and second positions, for example. In certain embodiments, the positioning of arm **1303** across slot **1301** can prevent, or at least inhibit, the cutting member **1160**, for example, from sliding out of the staple cartridge **1150**.

**[0203]** In order to facilitate the insertion and removal of the staple cartridge **1150** from staple cartridge channel **1122**, in various embodiments, the staple cartridge **1150** can comprise gripping portions positioned on opposite sides thereof, for example. In at least one embodiment, referring now to FIGS. **97** and **101**, the staple cartridge body **1152** can comprise lateral portions **1285** positioned adjacent to alignment slots **1280** wherein the lateral portions **1285** can be gripped and/or pushed on by a clinician in order to seat the proximal end **1213** of staple cartridge **1150** in the proximal end of staple cartridge channel **1122**, for example. Such a force can be applied to top, or tissue-contacting, surfaces of the lateral portions **1285** as the proximal end **1213** of staple cartridge **1150** is rotated into position as described above. In various embodiments, a lifting force can be applied to lateral portions **1285** in order to lift the proximal end **1213** of staple cartridge **1150** out of the staple cartridge channel **1122**. In at least one such embodiment, referring primarily to FIG. **101**, each lateral portion **1285** can comprise one or more steps, ridges, and/or elevations, such as elevations **1287***a*, **1287***b*, and/or **1287***c*, for example, which can be configured to improve the clinician's grip on the lateral portions **1285**. In various embodiments, the elevations **1287***a*, **1287***b*, and/or **1287***c* can be positioned at different heights relative to one another. In any event, the staple cartridge **1150** can be removed from channel **1122** by lifting the proximal end **1213** of staple cartridge **1150** out of channel **1122** and then unhooking, or disengaging, the distal end **1211** of staple cartridge **1150** from the distal end **1121** of channel **1122**, for example. As staple cartridge **1150** is removed from the channel **1122**, the slot **1161** within cutting member **1160** can be moved away and disengaged from the drive projection **1294** of pusher bar **1202**, for example.

**[0204]** In various circumstances, further to the above, the pusher bar **1202** and cutting member **1160** can be returned to their proximal positions before the staple cartridge **1150** is removed from the staple cartridge channel **1122**. In such a position, as described above, the cutting edge **1165** can be

positioned within the housing **1170**. In various embodiments, referring now to FIG. **102**, an alternative embodiment of a staple cartridge **1150'** is depicted without a housing **1170**. In at least one such embodiment, the cutting edge **1165** can at least partially extend above the deck surface **1158** of the staple cartridge body **1152** in its proximal position and/or any other distally-advanced positions, for example.

**[0205]** In various embodiments, further to the above, anvil **1130** can include one or more apertures, slots, or recesses **1179** (FIG. **50**) which can be configured to receive at least a portion of housing **1170** when anvil **1130** is brought into close opposition to staple cartridge **1150**, for example. In at least one embodiment, sufficient clearance can be present between housing **1170** and recess **1179** such that anvil **1130** and staple cartridge **1150** can be moved relative to each other without interference, or at least substantial interference, therebetween. In embodiments having more than one cutting member housing as outlined above, an opposing anvil can have more than one corresponding aperture for receiving the housings. In various embodiments, an anvil can include a movable cutting member and at least one housing for at least partially covering, enclosing, and/or surrounding the cutting member. In certain embodiments, although not illustrated, both an anvil and a staple cartridge can comprise at least one movable cutting member and/or at least one housing configured to at least partially cover, surround, or enclose the cutting members when they are in a proximal position, for example.

**[0206]** As outlined above, pusher bar assembly **1200** can be advanced distally in order to move staple sled assembly **1160** within staple cartridge assembly **1150**. In various embodiments, as also outlined above, the wedge-like cam surfaces **1167** of staple sled **1162** can be moved into engagement with the sloped surfaces **1169** on staple drivers **1168** to sequentially, and/or simultaneously, drive staples from staple cartridge **1150** against anvil **1130** and form the staples into any suitable configuration, such as B-shaped configurations, for example. In at least one such embodiment, referring to FIG. **50**, anvil **1130** can include one or more staple forming surfaces, such as staple pockets **1132**, for example, which can be configured to deform the staples. In certain embodiments, anvil **1130** can further include a slot, channel, or groove **1133** which can be configured to slidably receive at least a portion of staple sled **1162**, cutting member **1164**, and/or pusher bar **1202**, for example. In at least one embodiment, although not illustrated, an anvil can include an anvil plate which can be securely and/or immovably positioned within an anvil channel defined within the anvil. In various other embodiments, as illustrated in FIGS. **51** and **52** and described in greater detail below, anvil **1130** can include an anvil plate **1134** movably positioned within anvil channel **1136**. In certain embodiments, anvil channel **1136** can include opposite side walls **1137** and, in addition, a base **1138** extending between side walls **1137**. In at least one embodiment, anvil **1130** can further include a distal nose portion **1139**, for example, assembled thereto wherein nose portion **1139** can be configured to be press-fit and/or snap-fit into anvil channel **1136**, for example, such that nose portion **1139** can be securely retained therein. In certain embodiments, nose portion **1139** can be comprised of a soft and/or pliable material, such as rubber, for example, and can comprise any suitable shape which can facilitate the insertion of anvil **1130** into a surgical site, for example. In some embodiments, referring to FIG. **51**, a nose portion, such as nose portion **1139'** can be retained to an anvil by one or more fasteners **1139***a*'. Similarly, referring to FIG. **34**, a staple cartridge channel and/or staple cartridge, such as staple cartridge **1150**, for example, can include a nose portion, such as nose portion **1153**, for example, which can facilitate the insertion of staple cartridge **1150** into a surgical site, for example

**[0207]** As indicated above, staples can be deployed from a staple cartridge and deformed against an anvil. In various circumstances, the distance between the staple forming surfaces on anvil **1130** and staple sled **1162** can determine the amount in which the staples are deformed. For example, if the distance between anvil pockets **1132** on anvil **1130** and top surfaces **1135** on staple sled **1162** (FIGS. **43-45**) is relatively large, the staples will be deformed a lesser amount as compared to when the distance between anvil pockets **1132** and sled surfaces **1135** is relatively small. Correspondingly, if the distance between anvil pockets **1132** and sled surfaces **1135** is relatively small, the staples will be deformed a greater amount as compared to when the distance between anvil pockets **1132** and sled surfaces **1135** is relatively large. Often, the distance between anvil pockets **1132** and sled surfaces **1135** is referred to as the forming height of the staples. Sometimes the forming height of the staples can be measured between the top surface, or deck, of the staple cartridge and the staple forming surfaces on the anvil. For the purpose of this application, however, any reference to a staple forming height, or the like, can include one or both manners of measurement, where appropriate, and/or any other suitable manner of measurement. In any event, as described in greater detail below, a surgical stapling instrument, such as stapling instrument **1100**, for example, can include means for adjusting the staple forming height.

**[0208]** In various embodiments, further to the above, an anvil can include one or more forming surfaces which can be moved toward and/or away from a staple cartridge in order to set the forming height of the staples. In at least one embodiment, referring to FIGS. **50-56**, anvil **1130** can include anvil plate **1134** which can be movably and/or slidably positioned within anvil channel **1136**. In certain embodiments, anvil **1130** can further include one or more retention, or guide, pins **1140**, wherein anvil plate **1134** can include one or more retention, or guide, slots **1141** configured to slidably receive at least a portion of pins **1140**. In at least one such embodiment, pins **1140** and/or slots **1141** can be configured to define a predetermined path along which anvil plate **1134** can be moved. Referring to FIG. **51**, pins **1140** and slots **1141** can be structured and arranged such that anvil plate **1134** can be moved along a linear, or at least substantially linear, path, wherein the linear path can be at least partially defined by axes **1142** and **1143**, for example. Other embodiments are envisioned in which an anvil plate can be moved along a non-linear path, such as a curved and/or curvi-linear path, for example. In certain embodiments, at least a portion of pins **1140** can be retained within apertures **1144** in side walls **1137** wherein, in at least one embodiment, pins **1140** can be press-fit within apertures **1144**. In any event, as described herein, pins **1140** can guide anvil plate **1134** as it is moved toward and/or away from staple cartridge **1150**, for example.

**[0209]** In various embodiments, further to the above, a surgical stapling instrument, such as stapling instrument **1100**, for example, can include one or more adjustment members configured to position a portion of an anvil, such as anvil plate **1134**, for example, relative to other portions of an anvil assembly and/or an opposing staple cartridge. In certain embodiments, referring to FIGS. **51** and **52**, stapling instrument **1100** can include anvil plate adjustment member **1230** which can be configured to limit the range of motion of anvil

plate **1134**. In at least one such embodiment, referring to FIGS. **120** and **121**, adjusting member **1230** can be positioned intermediate anvil plate **1134** in a first position in which first surface, or step, **1231** of adjusting member **1230** is positioned intermediate base **1138** of anvil channel **1136** and first positioning surface **1145** on anvil plate **1134**. In such a first position, first step **1231** can define the amount of relative movement possible, or permitted, between anvil plate **1134** and anvil channel **1136**. For example, when anvil **1130** is clamped against tissue as described above, anvil plate **1134** can contact the tissue and slide upwardly toward base **1138** until first positioning surface **1145** contacts first step **1231**. Once surface **1145** and step **1231** are in contact, adjusting member **1230** can prevent, or at least inhibit, anvil plate **1134** from moving further toward base **1138**. In at least one such embodiment, as a result, adjusting member **1230** can act as a stop such that the distance between base **1138** and tissue-contacting surface **1148** on anvil plate **1134** can be defined by a first distance **1234**. While base **1138** is used as a reference datum in the present example, other portions of anvil **1130** and/or an opposing staple cartridge, for example, could be used as reference datums. When adjusting member **1230** is in its first position, as described above, second surface, or step, **1232** of adjusting member **1230** can be positioned intermediate base **1138** and second positioning surface **1146** on anvil plate **1134**, and, in addition, third surface, or step, **1233** can be positioned intermediate base **1138** and third positioning surface **1147**. Referring to FIG. **53**, adjustment member **1230** can include two or more sets of steps, **1231**, **1232**, and/or **1233** and anvil plate **1134** can include two or more sets of positioning surfaces **1145**, **1146**, and/or **1147**. While first step **1231** and first positioning surface **1145** are described above as being configured to control the position of anvil plate **1134**, the second and third steps (**1232**, **1233**) of adjustment member **1230** and the second and third positioning surfaces (**1146**, **1147**) of anvil plate **1134**, respectively, can also be configured to control the position of anvil plate **1134**. For the sake of brevity, though, the present example will be described in reference to the first surface, or step **1231**, as being the surface which controls the position of anvil plate **1134**, although the reader will understand that the steps **1232** and **1233** can control the position of anvil plate **1134** as well.

**[0210]** In certain embodiments, the first position of adjustment member **1230** can provide for a relatively small, or short, staple forming height. In other embodiments, although not illustrated, the first position of an adjustment member can provide for an intermediate, a relatively large, and/or any other suitable staple forming height. In the event that the forming height associated with the first position of the adjustment member is suitable, a surgeon can proceed to use the surgical stapling instrument to staple and/or incise tissue as described above. In the event, however, that the staple forming height is unsuitable, a surgeon, or other clinician, can move adjustment member **1230** such that adjustment member **1230** can permit anvil plate **1134** to slide upwardly a different distance when anvil plate **1134** contacts tissue positioned intermediate anvil **1130** and staple cartridge **1150**. In at least one such circumstance, the distance in which anvil plate **1134** is permitted to slide upwardly can be larger, thereby providing a larger forming height for the staples. Correspondingly, in other circumstances, the adjustment member can be moved such that anvil plate **1134** can slide upwardly a shorter distance when anvil plate **1134** contacts the tissue, for example, thereby providing a shorter staple forming height. While the term "upward", and the like, can mean vertically upward, the term is not so limited; rather, "upward" can mean any direction which is toward the base of the anvil and/or away from a staple cartridge, for example. In any event, adjustment member **1230** can be moved between its first position, illustrated in FIG. **54**, and a second position, illustrated in FIG. **55**, in order to increase the staple forming height. As indicated by arrow "P" in FIG. **55**, adjustment member **1230** can be slid proximally in order to move adjustment member **1230** between its first and second positions, although embodiments are envisioned where an adjustment member can be slid distally and/or any other suitable direction in order to adjust adjustment member **1230**. Once adjustment member **1230** has been moved into its second position, referring to FIG. **55**, first surface, or step, **1231** can be positioned intermediate base **1138** and second positioning surface **1146** of anvil plate **1134**. In such a second position, first step **1231** can once again define the amount of relative movement permitted between anvil plate **1134** and anvil channel **1136**. In at least one embodiment, similar to the above, adjusting member **1230** can act as a stop such that the distance between base **1138** and tissue-contacting surface **1148** on anvil plate **1134** can be defined by a second distance **1235**.

**[0211]** Further to the above, adjustment member **1230** can be moved between its second position, illustrated in FIG. **55**, and a third position, illustrated in FIG. **56**, in order to once again increase the staple forming height. As indicated by arrow "P" in FIG. **56**, adjustment member **1230** can be slid proximally in order to move adjustment member **1230** between its second and third positions. Once adjustment member **1230** has been moved into its third position, referring to FIG. **56**, first surface, or step, **1231** can be positioned intermediate base **1138** and third positioning surface **1147**. In such a third position, first step **1231** can once again define the amount of relative movement between anvil plate **1134** and anvil channel **1136**. In at least one embodiment, similar to the above, adjusting member **1230** can act as a stop such that the distance between base **1138** and tissue-contacting surface **1148** on anvil plate **1134** can be defined by a third distance **1236**. While adjustment member **1230** can be selectively moved between three positions as described above to provide three different staple forming heights, other embodiments are envisioned which comprise an adjustment member which can be moved between more than three positions to provide more than three different staple forming heights. For example, an adjustment member can be movable between four positions in order to provide four staple forming heights. Further embodiments are envisioned which comprise an adjustment member which can be moved between two positions to provide two staple forming heights. Furthermore, while surfaces, or steps, **1231**, **1232**, and **1233** of adjustment member **1230** are arranged in a descending order, other arrangements are envisioned in which the surfaces, or steps, are arranged in an ascending order. Other arrangements are envisioned in which the surfaces, or steps, are not necessarily arranged in either an ascending or a descending order. Similarly, positioning surfaces **1145**, **1146**, and **1147** of anvil plate **1134** can be arranged in an ascending order, a descending order (FIG. **53**), and/or any other suitable order. Furthermore, while adjustment member **1230** can be slid along an axis, other embodiments are envisioned where an adjustment member can be moved along any suitable path such as curved and/or curvilinear paths, for example.

**[0212]** As described above, referring to FIG. **54**, adjustment member **1230** can comprise three surfaces, or steps, **1231**, **1232**, and **1233** while anvil plate **1134** can comprise three corresponding adjustment surfaces **1145**, **1146**, and **1147**. When adjustment member **1230** is in its first position, for example, first surface **1231** can be positioned such that it abuts or is adjacent to first adjustment surface **1145**, second surface **1232** can be positioned such that it abuts or is adjacent to second adjustment surface **1146**, and third surface **1233** can be positioned such that it abuts or is adjacent to third adjustment surface **1147**. As adjustment member **1230** is slid relative to anvil plate **1134**, as described above and referring to FIGS. **55** and **56**, surfaces **1231**, **1232**, and **1233** of adjustment member **1230** can be sequentially indexed relative to surfaces **1145**, **1146**, and **1147** of anvil plate **1134**. In at least one such embodiment, an adjustment member can have the same number of steps as the number of positioning surfaces on an anvil plate. Other embodiments are envisioned where an adjustment member has more steps than positioning surfaces on the anvil plate. In at least one such embodiment, an anvil plate can include one positioning surface wherein the steps of an adjustment member can be selectively utilized to limit the upward movement of the anvil plate, for example. In various embodiments, referring generally to adjustment member **1230** and anvil plate **1134**, an anvil plate may include one positioning surface, such as positioning surface **1145**, for example, where steps **1231**, **1232**, and **1233** of adjustment member **1230**, for example, can be selectively positioned intermediate base **1138** and positioning surface **1145**. In such embodiments, first step **1231** can have a first thickness or height which can stop, or limit, the upward movement of anvil plate **1134** so as to define a first staple forming height, second step **1232** can have a second thickness or height which can stop, or limit, the upward movement of anvil plate **1134** so as to define a second staple forming height, and, in addition, third step **1233** can have a third thickness or height which can stop, or limit, the upward movement of anvil plate **1134** so as to define a third staple forming height. In at least one embodiment, the thickness or height of steps **1231**, **1232**, and/or **1233** can be measured between a back surface **1237** of adjustment member **1230** and a surface on the steps (**1231**, **1232**, **1233**) which will contact anvil plate **1134**. In various embodiments, the difference in height, or thickness, between first step **1231** and second step **1232** can be the same, or at least substantially the same, as the difference in height, or thickness, between second step **1232** and third step **1233**. In at least one such embodiment, as a result, the step heights can increase at a linear rate, or an at least substantially linear rate. In alternative embodiments, the difference in height, or thickness, between the first and second steps can be different than the difference in height, or thickness, between the second and the third steps. In at least one such embodiment, the first, second, and third steps may not increase or decrease in height, or thickness, at a linear rate; rather, although not illustrated, the steps may increase or decrease in height, or thickness, in a non-linear and/or geometric rate.

**[0213]** As described above, an adjustment member, such as adjustment member **1230**, for example, can be movable between two or more positions. In various embodiments, a surgical stapling instrument can include an actuator configured to move the adjustment member. In at least one embodiment, referring to FIGS. **50-53**, surgical stapling instrument **1100** can include actuator **1250** which can be operably attached to adjustment member **1230** such that a force can be applied to actuator **1250** and transmitted to adjustment member **1230**. In certain embodiments, actuator **1250** can include grasping portions, or handles, **1252** which can be configured to be grasped by a surgeon, for example, in order to advance or retract adjustment member **1230** within anvil **1130** as described above. In certain embodiments, grasping portions **1252** can extend from actuator body **1251**, wherein actuator body **1251** can include one or more apertures, slots, or cavities **1253** which can be configured to receive at least a portion of adjustment member **1230**. In at least one such embodiment, referring to FIG. **52**, adjustment member **1230** can include lock **1254** extending therefrom, wherein at least a portion of lock **1254** can be received within aperture **1253** so as to retain actuator body **1251** to adjustment member **1230**. In various embodiments, lock **1254** can include one or more resilient, or flexible, legs **1255** which can be deflected when they are inserted into aperture **1253** but resiliently return, or at least partially return, to their unflexed position after feet **1256** of legs **1255** are sufficiently pushed through aperture **1253**. In at least one such embodiment, feet **1256** can prevent, or at least inhibit, actuator body **1251** from being detached from adjustment member **1230**.

**[0214]** In various embodiments, further to the above, surgical stapling instrument **1100** can further include a detent mechanism which can be configured to hold, or releasably hold, actuator **1250** and/or adjustment member **1230** in position. In at least one embodiment, referring to FIG. **52**, detent member **1260** can be attached to actuator **1250** wherein, in at least some embodiments, actuator body **1251** can include one or more channels, grooves, or recesses **1257** which can be configured to receive and/or retain a detent body **1261** of detent member **1260** therein. In at least one embodiment, detent body **1261** can include one or more apertures **1263**, and/or any other suitable channels, slots, or grooves, which can be configured to receive one or more fasteners for securing detent body **1261** to actuator **1251**, for example. Detent member **1260** can further include detent legs **1262** which can be configured to engage one or more recesses, apertures, or grooves **1101** (FIGS. **35-40**) in first frame portion **1110**, for example. More particularly, referring to FIGS. **34** and **35**, each side flange **1128** can include one or more recesses **1101** (**1101***a*, **1101***b*, and **1101***c*) defined therein wherein detent legs **1262** can be biased into engagement with the top surfaces of side flanges **1128** such that detent legs **1262** can be slid into, and slid out of, recesses **1101**. In the illustrated embodiment, each side flange can include three recesses **1101** which can be configured to removably hold actuator **1250** in a first, distal position, a second, intermediate position, and a third, proximal position, wherein the first, second, and third positions of actuator **1250** can respectively correspond with the first, second, and third positions of adjustment member **1230** described above. For example, when actuator **1250** is in its first, distal position, detent legs **1262** of detent member **1260** can be positioned within recess **1101***a* so as to removably retain actuator **1250** and adjustment member **1230** in their first positions. Upon the application of a sufficient force, actuator **1250** can be moved proximally into its second position such that detent legs **1162** are positioned within recess **1101***b* and actuator **1250** and adjustment member **1230** are retained in their second positions. Similarly, upon the application of a sufficient force, actuator **1250** can be moved proximally into its third position such that detent legs **1162** are positioned within recess **1101***c* and actuator **1250** and adjustment member **1230** are retained in their third positions.

In various embodiments, detent legs **1162** can be configured such that actuator **1250** can be returned to its first and/or second positions.

**[0215]** As described above, adjustment member **1230** can be moved along a pre-determined path between two or more positions by actuator **1250**. In various embodiments, surgical stapling instrument **1100**, for example, can include one or more guides for controlling or limiting the movement of adjustment member **1230** and/or actuator **1250**. In some embodiments, adjustment member **1230** can be closely received between side walls **1137** of anvil **1130** such that side walls **1137** can guide adjustment member **1230**. In at least one such embodiment, side walls **1137** can be configured to control or limit the lateral or side-to-side movement of adjustment member **1230**. In various embodiments, detent legs **1162** of detent member **1160** can comprise resilient members which can be configured to apply an upward biasing or pulling force on adjustment member **1230** so as to position adjustment member **1230** against, or at least adjacent to, base **1138** and intermediate side walls **1137**. In certain embodiments, referring to FIG. **52**, base **138** of anvil **1130** can further include guide slot **1149** which can be configured to receive at least a portion of adjustment member **1230** and/or actuator **1250** therein such that guide slot **1149** can limit the movement of adjustment member **1230** and actuator **1250**. In at least one such embodiment, lock **1254** of adjustment member **1230** can be configured to extend through guide slot **1149** such that, when lock **1254** is inserted into aperture **1253** of actuator **1250** as described above, base **1138** of anvil **1130** can be captured intermediate adjustment member **1230** and actuator **1250**. In certain embodiments, guide slot **1149** can be configured to limit the movement of lock **1254** such that adjustment member **1230** can be prevented, or at least inhibited, from being moved distally when adjustment member **1230** is in its first, or distal-most, position and/or, similarly, prevented, or at least inhibited, from being moved proximally when adjustment member **1230** is in its third, or proximal-most, position.

**[0216]** In various embodiments, further to the above, a detent member, similar to detent member **1260**, for example, can be utilized to bias first handle portion **1102** and second handle portion **1104** away from one another. In at least one embodiment, referring to FIG. **70**, surgical stapling instrument **1100'** can include a detent member **1260'** configured to position first handle portion **1102** and second handle portion **1104** such that a gap exists between anvil **1130** and staple cartridge **1150**. Such a feature, as outlined above, can allow a surgeon to easily manipulate the surgical instrument without having to hold the first and second handle portions apart from one another. In certain embodiments, detent member **1260'** can be sufficiently mounted to second handle portion **1104** such that detent legs **1262'** extending from detent member **1260'** can contact flanges **1128** and, when compressed, apply a biasing force to the first and second handle portions. As seen in FIG. **70**, legs **1262'** can contact surfaces **1101***d* on flanges **1128**. In order to compress detent legs **1262'**, latch mechanism **1180** can be moved into a partially-closed position such that latch arms **1188** can engage, and at least partially surround, latch projections **1131**. In this configuration, a surgeon can manipulate the instrument and, when satisfied with its position, move latch mechanism **1180** into a closed position and further compress detent legs **1262'**. Similar to the above, detent member **1260'** can be affixed, or otherwise operably engaged with, actuator **1250** such that, when actuator **1250** is moved between its first, second, and third positions as described above, legs **1262'** can engage recesses **1101***a*, **1101***b*, and **1101***c*, respectively. In at least one such embodiment, as a result, actuator **1250** can have a pre-staged position in which actuator **1250** is positioned distally with respect to its first position and, in addition, surfaces **1101***d* can comprise pre-stage surfaces against which legs **1262'** can be positioned when actuator **1250** is in its pre-staged position.

**[0217]** As outlined above, an adjustment member can be slid, or translated, between first and second positions so as to adjust the forming height of staples deployed by a surgical stapling instrument. In various embodiments, although not illustrated, an adjustment member can be configured to positively displace an anvil plate toward and/or away from an opposing staple cartridge, for example. In at least one such embodiment, a surgical stapling instrument can include one or more biasing members, such as springs, for example, configured to position the anvil plate against the adjustment member such that, when the adjustment member is moved between its first and second positions, the adjustment member can displace the anvil plate between first and second positions in order to set first and second staple forming heights. In various embodiments, as a result of the above, an adjustment member can be configured to cam a portion of an anvil into position. In at least one such embodiment, an adjustment member can be slid along an axis in order to positively displace an anvil plate. In other embodiments, a rotatable adjustment member can be configured to positively displace an anvil plate toward and/or away from a staple cartridge, for example.

**[0218]** Further to the above, as described in greater detail below, an adjustment member can be rotated to adjust the staple forming height. Referring to FIGS. **57-69**, surgical instrument **1100'** can include, similar to the above, a first handle portion **1102'**, a second handle portion **1104'**, and a latching mechanism **1180'** which can be utilized to clamp tissue intermediate anvil **1130'** and staple cartridge **1150'**. Referring to FIG. **58**, also similar to the above, latching mechanism **1180'** can be pivotably coupled to first portion **1102'** by one or more pivot pins **1182'**, wherein latching mechanism **1180'** can include one or more latch arms **1188'** which can be configured to engage second portion **1104'** and latch the first and second handle portions together. Also similar to the above, referring to FIGS. **58** and **60**, surgical instrument **1100'** can further include pusher bar assembly **1200'** which can be configured to advance a cutting member and/or staple sled within end-effector **1120'**. In at least one such embodiment, pusher bar assembly **1200'** can include a proximal end **1203'** and an actuator **1204'**, wherein actuator **1204'** can be rotatably mounted to proximal end **1203'** and selectively positioned on first and second sides of stapling instrument **1100'**. In various embodiments, surgical stapling instrument **1100'** can comprise the same, or similar, features to those described in connection with surgical stapling instrument **1100** and can be operated in the same manner, or a similar manner, as instrument **1100** and, as a result, such details are not repeated herein.

**[0219]** In various embodiments, referring to FIG. **60**, surgical instrument **1100'** can include a rotatable adjustment member **1230'** which can be selectively positioned in at least first and second positions so as to provide different staple forming heights. In certain embodiments, surgical instrument **1100'** can include an actuator **1250'** which can be operably connected to adjustment member **1230'** such that actuator

1250' can move adjustment member 1230' between at least its first and second positions. In at least one embodiment, referring to FIG. 61, actuator 1250' can include actuator body 1251' and grasping portion, or handle, 1252'. Actuator body 1251' can include an aperture 1258' which can be configured to receive a proximal end 1238' of adjustment member 1230' such that rotational motion, torque, and/or forces can be transmitted between actuator 1250' and adjustment member 1230'. In at least one such embodiment, referring to FIG. 69, aperture 1258' can comprise a non-circular profile and/or a profile which includes one or more flat drive surfaces configured to transmit rotational motion between actuator body 1251' and actuator 1230'. In certain embodiments, aperture 1258' can be sized and configured to closely receive proximal end 1238' of actuator 1230'. In at least one embodiment, aperture 1258' can be configured to receive proximal end 1238' in a press-fit and/or snap-fit arrangement. In various embodiments, referring again to FIG. 61, handle portion 1104' can include one or more slots 1259' which can be configured to permit at least a portion of actuator body 1251' to extend therethrough such that grasping portion 1252' can be assembled to actuator body 1251' with at least a portion of handle portion 1104' positioned therebetween. In at least one such embodiment, second handle portion 1104' can further include recess 1253' which can be configured such that at least a portion, if not all, of grasping portion 1252' is positioned within recess 1253'. In certain embodiments, recess 1253' can be configured such that grasping portion 1252' does not extend above the top surface of second handle portion 1104' although, in other embodiments, an upper portion of grasping portion 1252' can extend above second handle portion 1104, as illustrated in FIG. 63, such that grasping portion 1252' can be easily accessed by a surgeon.

[0220] In various embodiments, as outlined above, an adjustment member can be rotatable between at least first and second positions in order to adjust the forming height of staples deployed by a surgical stapler. In certain embodiments, referring to FIG. 61, a surgical stapling instrument can include an adjustment member rotatably positioned within an anvil wherein the adjustment member can be configured to limit the relative movement of a movable anvil portion. In at least one such embodiment, surgical stapling instrument 1100' can include an anvil plate 1134' which can be slidably retained within anvil channel 1136' by retention, or guide, pins 1140', wherein guide pins 1140' can be configured to allow anvil plate 1134' to slide upwardly when anvil plate 1134' comes into contact with tissue as described above. Referring to FIGS. 60, 63, and 64, adjustment member 1230' can be positionable in a first position, or orientation, such that it can limit the upward movement of anvil plate 1134' within anvil channel 1136' and dictate the staple forming height of the staples. In at least one such embodiment, referring to FIGS. 63 and 64, adjustment member 1230' can include opposing first surfaces 1231' which can be positioned intermediate base 1138' of anvil channel 1136' and positioning surface 1145' of anvil plate 1134' such that, when positioning surface 1145' contacts one of first surfaces 1231', tissue-contacting surface 1148' of anvil plate 1134' can be positioned a first distance 1234' away from a datum surface 1129' on anvil 1130', for example. Correspondingly, forming surfaces 1132' can be positioned a first distance away from a staple cartridge such that, when staples are deployed from the staple cartridge, the staples can be deformed to a first staple height. Further to the above, a first diameter 1241' can be defined between first surfaces 1231' wherein the first diameter 1241' can define the maximum upward position of anvil plate 1134' within anvil channel 1136'.

[0221] As indicated above, adjustment member 1230' can be rotated in order to adjust the forming height of the staples. In various embodiments, adjustment member 1230' can be rotated between its first position, or orientation, (FIGS. 63 and 64) and a second position, or orientation (FIGS. 65 and 66). In at least one embodiment, referring to FIGS. 65 and 66, handle 1252' can be rotated in a direction indicated by arrow "A" in order to move adjustment member 1230' between its first and second positions. Similar to the above, when actuator 1230' is in its second position, or orientation, actuator 1230' can limit the upward movement of anvil plate 1134' within anvil channel 1136' and dictate the staple forming height of the staples. In at least one such embodiment, referring to FIGS. 65 and 66, adjustment member 1230' can include opposing second surfaces 1232' which can be positioned intermediate base 1138' and positioning surface 1145' such that, when positioning surface 1145' contacts one of second surfaces 1232', tissue-contacting surface 1148' of anvil plate 1134' can be positioned a second distance 1235' away from datum surface 1129', for example. Correspondingly, forming surfaces 1132' can be positioned a second distance away from a staple cartridge such that, when staples are deployed from the staple cartridge, the staples can be deformed to a second staple height. In various embodiments, similar to the above, a second diameter 1242' can be defined between second surfaces 1232', wherein second diameter 1242' can define the maximum upward position of anvil plate 1134' within anvil channel 1136'. Although first surfaces 1231' and second surfaces 1232' can be defined by flat, or at least substantially flat, surfaces, other embodiments are envisioned in which the first and second surfaces 1231' and 1232' can include at least partially arcuate, or curved, contours. In any event, referring to FIG. 60, adjustment member 1230' may include one or more clearance slots 1240' which can be configured to provide clearance between actuator 1230' and retention pins 1140'. Clearance slots 1240' can be configured to provide clearance between actuator 1230' and retention pins 1140' when actuator 1230' is in its first position, second position, and/or any other suitable position.

[0222] In various embodiments, further to the above, adjustment member 1230' can be rotated between its first position, or orientation, (FIGS. 63 and 64) and a third position, or orientation (FIGS. 67 and 68). In at least one embodiment, referring to FIGS. 67 and 68, handle 1252' can be rotated in a direction indicated by arrow "B" in order to move adjustment member 1230' between its first and third positions. Similar to the above, when actuator 1230' is in its third position, or orientation, actuator 1230' can limit the upward movement of anvil plate 1134' within anvil channel 1136' and dictate the staple forming height of the staples. In at least one such embodiment, referring to FIGS. 67 and 68, adjustment member 1230' can include opposing third surfaces 1233' which can be positioned intermediate base 1138' and positioning surface 1145' such that, when positioning surface 1145' contacts one of third surfaces 1233', tissue-contacting surface 1148' of anvil plate 1134' can be positioned a third distance 1236' away from datum surface 1129', for example. Correspondingly, forming surfaces 1132' can be positioned a third distance away from a staple cartridge such that, when staples are deployed from the staple cartridge, the staples can be deformed to a third staple height. In various embodiments,

similar to the above, a third diameter **1243'** can be defined between third surfaces **1233'**, wherein third diameter **1243'** can define the maximum upward position of anvil plate **1134'** within anvil channel **1136'**. Referring once again to FIGS. **67** and **68**, third surfaces **1233'** can be defined by an at least partially arcuate contour, although other embodiments are envisioned in which third surfaces **1233'** can include flat, or at least substantially flat, contours. In at least one embodiment, adjustment member **1230'** can be configured such that the largest distance, or diameter, between the arcuate third surfaces **1233'** can be utilized to define the third staple height.

**[0223]** As described above, referring to FIGS. **63** and **64**, adjustment member **1230'** can be positioned in a first position, or orientation, to set a first forming height for the staples deployed by surgical stapling instrument **1100'**. As also described above, referring to FIGS. **65** and **66**, actuator **1250'** can be utilized to move adjustment member **1230'** into its second position, or orientation, to set a second forming height for the staples. To do this, in at least one embodiment, a force can be applied to handle **1252'** which can cause handle **1252'**, and adjustment member **1230'** attached thereto, to rotate in a direction indicated by arrow "A". In at least one embodiment, adjustment member **1230'** and/or actuator **1250'** can be sufficiently retained such that, when adjustment member **1230'** is rotated, adjustment member **1230'** can be rotated about an axis, such as axis **1245'** (FIG. **60**), for example. In at least one embodiment, referring to FIG. **58**, the proximal end **1203'** of pusher bar assembly **1200'** can include one or more grooves, channels, or recesses **1205'** which can be configured to receive and/or retain at least a portion of adjustment member **1230'** and/or actuator **1250'** therein. In any event, as illustrated in FIGS. **63-66**, the second position, or orientation, of adjustment member **1230'** can allow anvil plate **1134'** to slide a larger distance within anvil channel **1136'** as compared to when adjustment member **1230'** is in its first position. In at least one embodiment, as a result, the second staple forming height can be larger than the first staple forming height. As also described above, referring to FIGS. **67** and **68**, actuator **1250'** can be utilized to move adjustment member **1230'** into its third position, or orientation, to set a third forming height for the staples. To do this, in at least one embodiment, a force can be applied to handle **1252'** which can cause handle **1252'**, and adjustment member **1230'** attached thereto, to rotate in a direction indicated by arrow "B". As illustrated in FIGS. **63**, **64**, **67**, and **68**, the third position, or orientation, of adjustment member **1230'** can allow anvil plate **1134'** to slide a smaller distance within anvil channel **1136'** as compared to when adjustment member **1230'** is in its first position. In at least one embodiment, as a result, the first and second staple forming heights can be larger than the third staple forming height. In at least one such embodiment, the first position of adjustment member **1230'**, and actuator **1250'**, can represent an intermediate position, wherein adjustment member **1230'** can be selectively moved into its second and third positions directly from its first position. In effect, the first position of adjustment member **1230'** can represent an intermediate staple height, wherein the second and third staple positions of adjustment member **1230'** can represent taller and shorter staple heights, respectively. In certain embodiments, referring to FIG. **57**, surgical stapling instrument **1100'** can include one or more indicia thereon which can be configured to convey the staple forming heights, or at least relative forming heights, that can be selected. For example, second handle portion **1104'** can include a first indicium **1245'** which can indicate an intermediate, or first, staple height, a second indicium **1246'** which can indicate a taller, or second, staple height, and, in addition, a third indicium **1247'** which can indicate a shorter, or third, staple height.

**[0224]** In various embodiments, further to the above, one or more of first surfaces **1231'**, second surfaces **1232'**, and third surfaces **1233'** can comprise or define, or at least partially comprise or define, a perimeter, or circumference, of adjustment member **1230'**. As discussed above, owing to the first, second, and third diameters (**1241'**, **1242'**, and **1243'**) defined by the first, second, and third surfaces (**1231'**, **1232'**, and **1233'**), respectively, the perimeter, or circumference, of adjustment member **1230'** may be non-circular. In certain embodiments, though, the perimeter, or circumference of adjustment member **1230'**, may be symmetrical, substantially symmetrical, and/or non-symmetrical. In various embodiments, further to the above, an adjustment member can comprise a cam rotatably positioned intermediate base **1138'** of anvil **1130'** and adjustment surface **1145'** of anvil plate **1134'**, for example. In at least one such embodiment, one or more of first surfaces **1231'**, second surfaces **1232'**, and third surfaces **1233'**, for example, can comprise or define a cam profile which, similar to the above, can be configured to either positively position anvil plate **1134'** and/or provide a stop against which anvil plate **1134'** can be positioned. In any event, although not illustrated, various embodiments are envisioned in which an adjustment member can be slid and rotated in order to set two or more staple forming heights for staples deployed by a surgical stapling instrument. In at least one such embodiment, an adjustment member can comprise a cam profile which can be defined along the length of the adjustment member wherein longitudinal and/or rotational movement can be utilized to move the cam profile between at least first and second positions.

**[0225]** In various embodiments, similar to the above, surgical instrument **1100'** can further include a detent mechanism configured to hold, or at least releasably hold, actuator **1250'** in position. In at least one embodiment, referring to FIGS. **58** and **59**, surgical instrument **1100'** can further include detent member **1260'** comprising detent body **1261'** and one or more detent legs **1262'**. Referring to FIG. **59**, detent body **1261'** can include one or more grooves, recesses, or channels **1263'** which can be configured to receive at least a portion of proximal end **1105'** of second handle portion **1104'** therein such that detent member **1260'** can be retained in position. In at least one such embodiment, proximal end **1105'** can further include one or more grooves, channels, or recesses **1265'** which can be configured to closely receive detent member **1260'**. In certain embodiments, at least a portion of detent body **1261'**, such as channel **1263'**, for example, can be press-fit, snap-fit, and/or otherwise suitably retained in recess **1265'**. As also illustrated in FIG. **59**, each detent leg **1262'** of detent member **1260'** can include one or more projections **1264'** extending therefrom which can be configured to engage actuator body **1251'** and releasably hold actuator **1250'** in position. In at least one embodiment, referring to FIG. **69**, actuator body **1251'** can include one or more recesses, or holes, **1269'** which can be configured to receive a projection **1264'**. When a projection **1264'** is positioned within recess **1269'**, the projection can be configured to hold actuator **1250'** in its first position, for example, until a sufficient force is applied to actuator **1250'** so as to cause the projection **1264'** to be displaced out of recess **1269'**. More particularly, the force applied to actuator **1250'** can be trans-

mitted to the projection **1264'** and, owing to cooperating surfaces between the projection **1264'** and recess **1269'**, the detent leg **1262'** associated with the projection **1264'** can be flexed or moved proximally to allow actuator body **1251'** to be moved relative thereto. In order to accommodate such proximal movement, referring to FIG. **58**, recess **1265'** can include elongate portions **1266'** which can each be configured to receive at least a portion of legs **1262'** such that legs **1262'** can move relative to handle portion **1104'**. As actuator **1250'** is moved into either its second or third position, actuator body **1251'** can contact a projection **1264'** extending from another leg **1262'** and deflect the leg **1262'** proximally such that, once actuator **1250'** is in its second or third positions, the leg **1262'** can spring forward, or distally, such that the projection **1264'** can be secured within recess **1269'**. In at least one embodiment, further to the above, the interaction between projections **1264'** and the sidewalls of recess **1269'** can be such that actuator **1250'** can be securely held in one of its first, second, and third positions, for example, yet permit actuator **1250'** to be moved upon a sufficient application of force. In such embodiments, the detent member **1260'** can prevent, or at least inhibit, actuator **1250'** and, correspondingly, adjustment member **1230'** from being unintentionally displaced.

**[0226]** As discussed above and as shown in FIG. **35**, each side flange **1128** of first handle portion **1102** can include a notch, or recess, **1127**, for example, which can be configured to receive one or more latch projections **1131**, for example, extending from anvil **1130**, and/or any other suitable portion of second handle portion **1104**. As also discussed above, referring primarily to FIGS. **35** and **36**, first handle portion **1102** can further include latching mechanism **1180** rotatably mounted thereto which can be utilized to engage latch projections **1131** extending from second handle portion **1104** and secure the first and second handle portions **1102**, **1104** together. Latching mechanism **1180** can include one or more latch arms **1188** extending therefrom which can be configured to engage latch projections **1131** and pull and/or secure projections **1131** within recesses **1127** as illustrated in FIG. **40**. Referring to FIG. **39**, at least one of latch arms **1188** can include a distal hook **1189** which can be configured to wrap around at least a portion of projections **1131** so as to encompass or surround, or at least partially encompass or surround, projections **1131**. In at least one embodiment, latch arms **1188** can act as an over-center latch to maintain latching mechanism **1180** in its latched, or closed, position.

**[0227]** In various embodiments, referring now to FIG. **71**, each projection **1131** can comprise a slot, or groove, **1190** positioned intermediate sidewall **1191** and an enlarged end, or head, **1192** of projection **1131**, wherein the slot **1190** can be configured to receive at least a portion of latch arm **1188**. More particularly, in at least one embodiment, the slot **1190** can have a width which is greater than the width of the latch arm **1188** such that, when the latch arm **1188** is engaged with the projection **1131**, the latch arm **1188** can enter into slot **1190**. In some circumstances, the width of each slot **1190** may be slightly larger than the width of a latch arm **1188** such that the latch arm is closely received within the slot **1190**. In various circumstances, the slot **1190**, the sidewall **1191**, and the head **1192** of projection **1131** can be sized and configured so as to prevent, or at least limit, relative lateral movement, i.e., movement away from or to the sides of anvil **1130**, between latch arm **1188** and projection **1131**. Further to the above, however, the latch arms **1188** can slide longitudinally within the grooves **1190** as the latch arms **1188** move the projections **1131** into the recesses **1127** in first portion **1102**. Owing to such relative sliding movement between latch arms **1188** and projections **1131**, frictional forces can be generated therebetween which can resist the movement of latch arms **1188**. In various circumstances, the magnitude of such frictional forces can be significant when the normal, or perpendicular, contact forces between the latch arms **1188** and the sidewalls of groove **1190** are large. In many circumstances, as a result, the operator of the surgical instrument has to overcome these frictional forces when actuating clamping mechanism **1180**.

**[0228]** In various alternative embodiments, referring now to FIGS. **72** and **73**, a surgical instrument can comprise one or more latch projections having a rotatable bearing which can reduce the magnitude of the friction forces between the latch arms of a latching mechanism and the latch projections. In at least one embodiment, an anvil **1330**, which can be substantially similar to anvil **1130** in many respects, can comprise a latch projection **1331** extending from each side thereof, wherein each latch projection **1331** can comprise a rotatable bearing **1393**. In use, the latch arms **1188** of latching mechanism **1180**, for example, can contact the rotatable bearings **1393** in order to position the latch projections **1331** in recesses **1127**. In various circumstances, the latch arms **1188** can slide across the surface, or outer diameter, of bearings **1393**; however, as bearings **1393** can rotate relative to the latch arms **1188**, the magnitude of the frictional forces between the latch arms **1188** and projections **1331** can be lower than the magnitude of the frictional forces between latch arms **1188** and projections **1131**. Owing to such lower frictional forces, a lower closing, or clamping, force may be required to actuate clamping mechanism **1180**, for example.

**[0229]** In various embodiments, referring primarily to FIG. **74**, each rotatable bearing **1393** can comprise a circular, or round, outer diameter **1394** and, in addition, a circular, or round, bearing aperture **1395** extending therethrough. In certain embodiments, each projection **1331** can further comprise a shaft portion **1396** extending from sidewall **1391** and an enlarged end, or head, **1392** extending from shaft portion **1396**, wherein, as illustrated in FIG. **64**, the shaft portion **1396** can extend through the bearing aperture **1395** of rotatable bearing **1393**. In various embodiments, the shaft portion **1396** can comprise a circular, or round, outer diameter which can be closely received within bearing aperture **1395** such that there is little, if any, relative radial movement therebetween. The diameter of the bearing aperture **1395**, however, may be sufficiently larger than the outer diameter of shaft portion **1396** such that bearing **1393** can rotate relative to shaft portion **1396** about an axis **1399**. In various embodiments, the rotatable bearing **1393** can be retained on shaft portion **1396** by the enlarged head **1392**. More particularly, in at least one embodiment, the enlarged head **1392** may be larger than, or define a larger diameter than, the diameter of bearing aperture **1395** such that rotatable bearing **1393** cannot slide off the end of shaft portion **1396**. In certain embodiments, the sidewall **1391** and the head **1392** can define a gap distance therebetween and, in addition, the bearing **1393** can comprise a width, wherein the gap distance can be larger than the width of bearing **1393**. In at least one embodiment, the gap distance may be slightly larger than the width of bearing **1393** such that bearing **1393** does not tilt, or at least substantially tilt, relative to axis **1399**, for example.

**[0230]** As discussed above, the latch arms **1188** of latching mechanism **1180** can be configured to engage bearings **1393**

and position bearings **1393** within recesses **1127**. In various alternative embodiments, referring primarily to FIG. **73**, a surgical instrument can comprise a latching mechanism **1380** which can comprise first and second latch arms **1388** extending therefrom on opposite sides of anvil **1331** and staple cartridge channel **1324**. In use, similar to the above, the latch arms **1388** can contact bearings **1393** in order to move bearings **1393** into recesses **1327** in staple cartridge channel **1324** and move anvil **1331** toward staple cartridge channel **1324**. Such movement is illustrated with phantom lines in FIG. **74**. In various embodiments, each latch arm **1388** can at least partially define a groove, or slot, **1397** therein, wherein each slot **1397** can be configured to receive a bearing **1393**. In at least one embodiment, a slot **1397** can comprise a first drive surface, or sidewall, **1398***a* which can be positioned against bearing **1393** and, as a closing force is applied to latching mechanism **1380**, the latch arm **1388** can apply a closing force to the bearing **1393**. In such circumstances, the bearing **1393** can move further into slot **1397** as latching mechanism **1380** is rotated into its closed position. In various circumstances, the slot **1397** can further comprise a second drive surface, or sidewall, **1398***b* which can be positioned against another and/or opposite side of bearing **1393** such that an opening force can be applied to the bearing **1393** via latch arm **1388**. As the latching mechanism **1380** is moved into its open position, the bearing **1393** can move out of slot **1397**. In any event, the first drive surface **1398***a* and the second drive surface **1398***b* can define a slot width therebetween which can be larger than the outside diameter of bearing **1393** such that bearing **1393** can move within slot **1397**. In some embodiments, the slot width may be slightly larger than the outside diameter of bearing **1393**. In at least one embodiment, at least portions of the first drive surface **1398***a* and the second drive surface **1398***b* can be parallel, or at least substantially parallel, to one another. In at least one such embodiment, at least portions of the first drive surface **1398***a* can be positioned opposite the second drive surface **1398***b*.

**[0231]** As described above, a surgical stapling instrument can be configured to deform one or more surgical staples between a first, undeployed, configuration and a second, deployed, configuration. In various embodiments, referring now to FIG. **72**, a surgical staple, such as staple **1400**, for example, can comprise a base **1402**, a first leg, or deformable member, **1404** extending from base **1402**, and, in addition, a second leg, or deformable member, **1406** extending from base **1402**. In certain embodiments, the base **1402**, the first leg **1404**, and the second leg **1406** can be comprised of a continuous wire, wherein, in at least one embodiment, the first leg **1404** and the second leg **1406** can each be bent in a direction which is perpendicular to the base **1402** prior to staple **1400** being inserted into and deformed by a surgical stapler. More particularly, the staple **1400** can be manufactured such that base **1402** is oriented along a baseline **1401** and such that the legs **1404** and **1406** are oriented along lines **1409** and **1411**, respectively, which are perpendicular, or at least substantially perpendicular, to the baseline **1401**. In various embodiments, the first leg **1404** can be positioned at a first end of base **1402** and the second end **1406** can be positioned at a second end of base **1402**, wherein, in at least one embodiment, a mid-line **1403** can be defined which extends through a midpoint of base **1402** and which extends in a direction which is perpendicular to baseline **1401**. The staple **1400** can be configured such that the base **1402**, first leg **1404**, and second leg **1406** lie, or at least substantially lie, in the same, or common, plane when the staple **1400** is in its first, or undeployed, configuration. In such embodiments, the baseline **1401**, along which the base **1402** is oriented, and the perpendicular lines **1409** and **1411**, along which the legs **1404** and **1406** are oriented, can lie in the same plane.

**[0232]** In various embodiments, further to the above, the continuous wire comprising the base **1402**, the first leg **1404**, and the second leg **1406** can be comprised of titanium and/or stainless steel, for example. In at least one embodiment, the first leg **1404** can comprise a first end **1405** and the second leg **1406** can comprise a second end **1407**, wherein the ends **1405** and **1407** can each comprise a sharp, or chisel, tip which can be configured to puncture bone and/or tissue. In use, the staple **1400** can be deformed by a surgical stapler in order to capture tissue, for example, within the staple **1400**. In various embodiments, the staple **1400** can be deployed from a staple cartridge such that the ends **1405** and **1407** of staple legs **1404** and **1406**, respectively, contact an anvil positioned opposite the staple **1400**. In such circumstances, a first compressive force F**1** can be applied to the first leg **1404** and a second compressive force F**2** can be applied to the second leg **1406** while the base **1402** is supported by at least a portion of the staple cartridge. As described in greater detail below, the anvil can comprise a staple pocket which can apply the first compressive force F**1** to the first leg **1404** such that the end **1405** of staple leg **1404** is moved toward the base **1402**. Similarly, the staple pocket can apply the second compressive force F**2** to the second staple leg **1406** such that the end **1407** of staple leg **1404** is also moved toward base **402**. In addition to the above, as also discussed in greater detail below, referring now to FIGS. **83-85**, the staple pocket can bend the first staple leg **1404** to a first side of base **1402** and the second staple leg **1406** to a second, or opposite, side of base **1402**.

**[0233]** In various embodiments, referring to FIGS. **82** and **83**, the first leg **1404** of staple **1400** can be bent such that the end **1405** of the first leg **1404** is moved toward the base **402** and toward the second leg **1406** when the first leg **1404** is deformed by the first compressive force F**1**. In at least one embodiment, the end **1405** can be moved from a first side **1410** of midline **1403**, as illustrated in FIG. **82**, to a second side **1412** of midline **1403**, as illustrated in FIG. **83**. Similarly, the second leg **1406** of staple **1400** can be bent such that the end **1407** of the second leg **1406** is moved toward the base **1402** and toward the first leg **1404** when the second leg **1406** is deformed by the second compressive force F**2**. In at least one embodiment, the end **1407** can be moved from a second side **1412** of midline **1403**, as illustrated in FIG. **82**, to a first side **1410** of midline **1403**, as illustrated in FIG. **83**. In the deployed, or deformed, configuration of staple **1400**, as illustrated in FIG. **83**, the ends **1405** and **1407** of staple legs **1404** and **1406** can extend across the midline **1403** in such a way that they form an angle therebetween. More particularly, the end **1405** of the first leg **1404**, when it is in its deformed configuration, can extend along or with respect to a first axis **1414** and, similarly, the end **1407** of the second leg **1406**, when it is in its deformed configuration, can extend along or with respect to a second axis **1416** such that the first axis **1414** and the second axis **1416** define an angle **1417** therebetween. In some embodiments, the angle **1417** may be approximately 90 degrees, for example. In certain embodiments, the angle **1417** may be in a range between approximately 0.1 degrees and approximately 89 degrees, for example. In various embodiments, the angle **1417** may be greater than 90 degrees,

while, in at least one embodiment, the angle **1417** may be greater than approximately 90 degrees but less than 180 degrees, for example.

**[0234]** In various embodiments, further to the above, the first axis **1414** and the second axis **1416** can, in various embodiments, be oriented, or crossed, at a transverse angle with respect to each other, i.e., at least when the staple **1400** is viewed from the side or elevational view of FIG. **83**. More particularly, upon reviewing FIG. **85**, it becomes evident that, although axes **1414** and **1416** extend in transverse directions when viewed from the side (FIG. **83**), the axes **1414** and **1416** may not, in at least one embodiment, actually intersect one another. In such embodiments, when viewing the staple **1400** from the top or bottom (FIG. **85**), for example, the axes **1414** and **1416** may extend in parallel, or at least substantially parallel, directions. Furthermore, in various embodiments, the reader will note that the first axis **1414** and the second axis **1416** are not perpendicular with baseline **1401**. Stated another way, the end **1405** of first staple leg **1404** and the end **1407** of second staple leg **1406** are not pointing directly downwardly toward base **1402** and baseline **1401**. In at least one such embodiment, the first axis **1414** and the second axis **1416** can each extend at an acute angle with respect to baseline **1401**, for example.

**[0235]** As described above, a surgical instrument can be configured to deform the staple **1400** of FIG. **82**, for example, between an undeformed shape (FIG. **82**) and a deformed shape (FIG. **83**). In various embodiments, as also described above, the surgical instrument can comprise an anvil having a staple pocket configured to receive and deform at least a portion of the staple. In certain embodiments, referring now to FIG. **75**, an anvil can comprise a tissue-contacting surface **1501** and a plurality of staple pockets **1500** formed therein, wherein each staple pocket **1500** can be configured to deform a staple **1400**. In various embodiments, each staple pocket **1500** can comprise a longitudinal axis **1599** (FIG. **76**) and, in addition, a first forming cup **1502** and a second forming cup **1504** positioned relative to the longitudinal axis **1599**. In use, the first forming cup **1502** can be configured to receive the first staple leg **1404** of staple **1400** and the second forming cup **1504** can be configured to receive the second staple leg **1406**. More particularly, in at least one embodiment, the staple pocket **1500** can be positioned relative to the staple **1400** such that, as the staple **1400** is ejected from a staple cartridge, for example, the end **1405** of first leg **1404** can enter the first forming cup **1502** and the end **1407** of second leg **1406** can enter the second forming cup **1504**. Further to the above, the end **1405** of first staple leg **1404** can contact the base **1506** of first forming cup **1502** such that the first compressive force F**1** can be applied to the first leg **1404** and, similarly, the end **1407** of second staple leg **1406** can contact the base **1508** of second forming cup **1504** such that the second compressive force F**2** can be applied to the second leg **1406**.

**[0236]** In various embodiments, further to the above, the first forming cup **1502** can comprise an inside portion **1510** and an outside portion **1512**, wherein, when the end **1405** of first staple leg **1404** enters into the first forming cup **1502**, the end **1405** can enter into the outside portion **1512**. Upon entering into the outside portion **1512** of forming cup **1502**, the end **1405** can contact base **1506** and, owing to a concave curve of base **1506**, the end **1405** can be directed inwardly toward the inside portion **1510**. More particularly, referring now to FIGS. **77-81**, the base **1506** can be curved toward tissue-contacting surface **1501** such that, as the staple leg **1404** contacts the base **1506**, the end **1405** can be directed downwardly, i.e., away from tissue-contacting surface **1501**, and inwardly along the curved concave surface toward an inflection point **1595**. In various embodiments, the inflection point **1595** can represent the point in which the concave surface of base **1506** will begin to deflect the end **1405** of first leg **1404** upwardly toward the tissue-contacting surface **1501**. In various embodiments, the radius of curvature, r, of the concave surface can be constant, or at least substantially constant, in the longitudinal direction along the length thereof as illustrated in FIGS. **80** and **81**. In certain embodiments, the radius of curvature r of the concave surface of base **1506** can be consistent across the width of base **1506** between a first interior sidewall **1516** and a first exterior sidewall **1517**. In any event, as the end **1405** of first leg **1404** is advanced into the inside portion **1510** of forming cup **1502**, the end **1405** can come into contact with a radius transition **1514** positioned intermediate the base **1506** and the first interior sidewall **1516**. In such embodiments, the radius transition **1514** can be configured to direct the end **1405** against the first interior sidewall **1516**.

**[0237]** As illustrated in FIG. **76**, further to the above, the first interior sidewall **1516** can be oriented at an angle with respect to staple pocket longitudinal axis **1599**. In certain embodiments, the first interior sidewall **1516** can be oriented at an acute angle, such as 10 degrees, for example, with respect to longitudinal axis **1599**. In various embodiments, the first interior sidewall **1516** and the longitudinal axis **1599** may be neither perpendicular nor parallel to one another. In any event, the first interior sidewall **1516** can extend through the axis **1599** such that a first portion of the first interior sidewall **1516** is positioned on a first side **1515** of axis **1599** and a second portion of the first interior sidewall **1516** is positioned on a second side **1517** of axis **1599**. In various embodiments, as a result, the first interior sidewall **1516** can extend between the first outside portion **1512** and the first inside portion **1510**. When the end **1405** of first leg **1404** contacts the first interior sidewall **1516**, as described above, the end **1405** can be directed along the first interior sidewall **1516** and away from longitudinal axis **1599** such that the staple leg **1404** is bent away from the common plane of staple **1400** toward the first side **1515** of axis **1599**. As the end **1405** of first leg **1404** is directed along, or bent by, the first interior sidewall **1516**, as described above, the staple leg **1404** can also be directed, or bent, by base **1506**. Stated another way, the first sidewall **1516** and the first base **1506** can co-operate to deform the first staple leg **1404** such that end **1405** is re-directed toward the base **1402** and, at the same time, to a first side of the base **1402** as described above. At some point during the insertion of first staple leg **1404** into first forming cup **1502**, the end **1405** of first staple leg **1404** can emerge from the first inside portion **1510** of first forming cup **1502** and, as the staple leg **1404** is further deformed by the staple pocket **1500**, the end **1405** can be directed along the first axis **1414** (FIG. **83**) as described above.

**[0238]** In various embodiments, further to the above, the first interior sidewall **1516** can extend along an interior side of the first base **1506**, wherein, in at least one embodiment, the first forming cup **1502** can further comprise a first exterior sidewall **1517** extending along an opposite side of the first base **1506**. In certain embodiments, similar to the above, the first forming cup **1502** can further comprise a transition radius **1519** positioned intermediate the base **1506** and the

exterior sidewall **1517**. In at least one embodiment, referring now to FIG. **76**, the exterior sidewall **1517** can extend in a direction which is parallel, or at least substantially parallel, to the staple pocket longitudinal axis **1599**. As also illustrated in FIG. **76**, the first interior sidewall **1516** and the first exterior sidewall **1517** can extend in directions which are transverse to one another. In at least one embodiment, the interior sidewall **1516** can extend at an acute angle, such as approximately 15 degrees, for example, with respect to the exterior sidewall **1517**. In various embodiments, as a result, the outside portion **1512** of first forming cup **1502** can be wider than the inside portion **1510**. In at least one such embodiment, the width of the outside portion **1512** and the inside portion **1510** can taper between a first width and a second width.

**[0239]** In various embodiments, referring once again to FIG. **76**, the outside portion **1512** of first forming cup **1502** can comprise a first outside wall **1513** which can extend in a direction which is perpendicular to the first exterior wall **1517** and/or the longitudinal axis **1599** and can define the outermost portion of forming cup **1502**. In at least one embodiment, further to the above, the width of the first outside wall **1513** can be such that the outside portion **1512** can capture the end **1405** of first leg **1404** and guide it into the inside portion **1510** of cup **1502** as described above. In at least one such embodiment, the first outside wall **1513** can be at least as twice as wide as the diameter of the first leg **1404**. In certain embodiments, the first forming cup **1502** can further comprise a channeling surface **1528** surrounding the first inner portion **1510** and the first outer portion **1512** which can be configured to guide the staple leg **1404** into and/or out of the forming cup **1502**. In various embodiments, the inside portion **1510** can further comprise an inside wall **1511** which can define the innermost portion of forming cup **1502**. Similar to the above, the inside wall **1511** can also define the narrowest portion of forming cup **1502**. In at least one embodiment, the width of the inside wall **1511** may be the same, or at least substantially the same, as the diameter of first leg **1404** such that the inside wall **1511** can control the location in which the end **1405** emerges from staple forming cup **1502**.

**[0240]** In various embodiments, further to the above, the second forming cup **1504** can comprise an inside portion **1520** and an outside portion **1522**, wherein, when the end **1407** of second staple leg **1406** enters into the second forming cup **1504**, the end **1407** can enter into the outside portion **1522**. Upon entering into the outside portion **1522** of forming cup **1504**, the end **1407** can contact base **1508** and, owing to a concave curve of base **1508**, the end **1407** can be directed inwardly toward the inside portion **1520**. More particularly, similar to the above, the base **1508** can be curved toward tissue-contacting surface **1501** such that, as the staple leg **1406** contacts the base **1508**, the end **1407** can be directed downwardly, i.e., away from tissue-contacting surface **1501**, and inwardly along the curved concave surface toward an inflection point **1596**. In various embodiments, the inflection point **1596** can represent the point in which the concave surface of base **1508** will begin to deflect the end **1407** of second leg **1406** upwardly toward the tissue-contacting surface **1501**. In various embodiments, the radius of curvature, r, of the concave surface can be constant, or at least substantially constant, in the longitudinal direction along the length thereof, similar to the base **1506** of first forming cup **1502** illustrated in FIGS. **80** and **81**. In any event, as the end **1407** of second leg **1406** is advanced into the inside portion **1520** of forming cup **1504**, the end **1407** can come into contact with a radius transition **1524** positioned intermediate the base **1508** and a second interior sidewall **1526**. In such embodiments, the radius transition **1524** can be configured to direct the end **1407** against the second interior sidewall **1526**.

**[0241]** As illustrated in FIG. **76**, further to the above, the second interior sidewall **1526** can be oriented at an angle with respect to staple pocket longitudinal axis **1599**. In certain embodiments, the second interior sidewall **1526** can be oriented at an acute angle, such as 10 degrees, for example, with respect to longitudinal axis **1599**. In various embodiments, the second interior sidewall **1526** and the longitudinal axis **1599** may be neither perpendicular nor parallel to one another. In any event, the second interior sidewall **1526** can extend through the axis **1599** such that a first portion of the second interior sidewall **1526** is positioned on a first side **1515** of axis **1599** and a second portion of the second interior sidewall **1526** is positioned on a second side **1517** of axis **1599**. In various embodiments, as a result, the second interior sidewall **1526** can extend between the second outside portion **1522** and the second inside portion **1520**. When the end **1407** of second leg **1406** contacts the interior sidewall **1526**, as described above, the end **1407** can be directed along the interior sidewall **1526** such that the staple leg **1406** is bent away from the common plane of staple **1400** toward the second side **1517** of axis **1599**. As the end **1407** of second leg **1406** is directed along, and bent by, the interior sidewall **1526**, as described above, the staple leg **1406** can also be directed, and bent, by base **1508**. Stated another way, the second interior sidewall **1526** and the second base **1508** can co-operate to deform the second staple leg **1406** such that end **1407** is re-directed toward the base **1402** and, at the same time, toward a second, or opposite, side of the base **1402** as described above. At some point during the insertion of second staple leg **1406** into second forming cup **1504**, the end **1407** of second staple leg **1406** can emerge from the second inside portion **1520** of second forming cup **1504** and, as the staple leg **1406** is further deformed by the staple pocket **1500**, the end **1407** can be directed along the second axis **1416** (FIG. **83**) as described above.

**[0242]** In various embodiments, further to the above, the second interior sidewall **1526** can extend along an interior side of the second base **1508**, wherein, in at least one embodiment, the second forming cup **1504** can further comprise a second exterior sidewall **1527** extending along an opposite side of the second base **1508**. In certain embodiments, similar to the above, the second forming cup **1504** can further comprise a transition radius **1529** positioned intermediate the base **1508** and the exterior sidewall **1527**. In at least one embodiment, referring now to FIG. **76**, the exterior sidewall **1527** can extend in a direction which is parallel, or at least substantially parallel, to the staple pocket longitudinal axis **1599**. As also illustrated in FIG. **76**, the second interior sidewall **1526** and the second exterior sidewall **1527** can extend in directions which are transverse to one another. In at least one embodiment, the interior sidewall **1526** can extend at an acute angle, such as approximately 15 degrees, for example, with respect to the exterior sidewall **1527**. In various embodiments, as a result, the outside portion **1522** of second forming cup **1504** can be wider than the inside portion **1520**. In at least one such embodiment, the width of the outside portion **1522** and the inside portion **1520** can taper between a first width and a second width.

**[0243]** In various embodiments, referring once again to FIG. **76**, the outside portion **1522** of second forming cup **1504**

can comprise a second outside wall **1523** which can extend in a direction which is perpendicular to the second exterior wall **1527** and/or the longitudinal axis **1599** and can define the outermost portion of forming cup **1504**. In at least one embodiment, further to the above, the width of the second outside wall **1523** can be such that the outside portion **1522** can capture the end **1407** of second leg **1406** and guide it into the inside portion **1520** of cup **1504** as described above. In at least one such embodiment, the second outside wall **1523** can be at least as twice as wide as the diameter of the second leg **1406**. In certain embodiments, the second forming cup **1504** can further comprise a channeling surface **1529** surrounding the second inner portion **1520** and the second outer portion **1522** which can be configured to guide the staple leg **1406** into and/or out of the forming cup **1504**. In various embodiments, the inside portion **1520** can further comprise an inside wall **1521** which can define the innermost portion of forming cup **1504**. Similar to the above, the inside wall **1521** can also define the narrowest portion of forming cup **1504**. In at least one embodiment, the width of the inside wall **1521** may be the same, or at least substantially the same, as the diameter of second leg **1406** such that the inside wall **1521** can control the location in which the end **1407** emerges from staple forming cup **1504**.

**[0244]** As discussed above, referring again to FIGS. **76-78**, the first forming cup **1502** can comprise a first interior sidewall **1516** and the second forming cup **1504** can comprise a second interior sidewall **1526**. As illustrated in FIG. **76**, the first inside portion **1510** of forming cup **1502** can be positioned in close proximity to, or close relation to, the second inside portion **1520** of forming cup **1504** such that the first interior sidewall **1516** can be positioned adjacent to the second interior sidewall **1526**. In at least one embodiment, the first interior portion **1510**, or at least a substantial portion thereof, can be offset from the staple pocket longitudinal axis **1599** in the first direction **1515** while the second interior portion **1520**, or at least a substantial portion thereof, can be offset from the longitudinal axis **1599** in the second direction **1517**. In various embodiments, the staple pocket **1500** can comprise a wall **1530** positioned intermediate the first inside portion **1510** and the second inside portion **1520**, wherein a first side of wall **1530** can comprise the first interior sidewall **1516** and wherein a second side of wall **1530** can comprise the second interior sidewall **1526**. In at least one such embodiment, the first interior sidewall **1516** can be parallel, or at least substantially parallel to, the second interior sidewall **1526**. More particularly, in at least one embodiment, the first interior sidewall **1516** can define a first plane and the second interior sidewall **1526** can define a second plane, wherein the first plane and the second plane can be parallel, or at least substantially parallel, to one another. In various embodiments, referring again to FIGS. **77** and **78**, the first interior sidewall **1516** can be perpendicular, or at least substantially perpendicular, to the tissue-contacting surface **1501** and, similarly, the second interior sidewall **1526** can be perpendicular, or at least substantially perpendicular, to the tissue-contacting surface **1501**.

**[0245]** In various embodiments, further to the above, the first interior sidewall **1516** can comprise a first vertical portion **1516***a* which is perpendicular, or at least substantially perpendicular, to the tissue-contacting surface **1501**. In at least one embodiment, the first vertical portion **1516***a* can extend through, or transect, the longitudinal axis **1599**. In various embodiments, the first vertical portion **1516***a* can extend along the entirety of, or only a portion of, the first interior sidewall **1516**. Similarly, the second interior sidewall **1526** can comprise a second vertical portion **1526***a* which is perpendicular, or at least substantially perpendicular, to the tissue-contacting surface **1501**. In at least one embodiment, such a second vertical portion **1526***a* can extend through, or transect, the longitudinal axis **1599**. In various embodiments, the second vertical portion **1526***a* can extend along the entirety of, or only a portion of, the second interior sidewall **1526**. During the deployment of staple **1400**, further to the above, the end **1405** of first leg **1404** can be in contact with the first vertical portion **1516***a* of first interior sidewall **1516** at the same time the end **1407** of second leg **1406** is in contact with the second vertical portion **1526***a* of second interior sidewall **1526**. In such circumstances, the first vertical portion **1516***a* and the second vertical portion **1526***a* can comprise a vertical trap. More particularly, the vertical portions **1516***a* and **1526***a* can co-operate to control, deflect, and bend the staple legs **1404** and **1406** in opposite directions, i.e., in directions to the sides of a common plane, as described above, when the legs **1404** and **1406** come into contact with the interior sidewalls **1516** and **1526** of forming cups **1502** and **1504**, respectively. For example, referring again to FIG. **75**, the first vertical portion **1516***a* can be configured to deflect and bend the staple leg **1404** to a first side of base **1402** and the second vertical portion **1526***a* can be configured to deflect and bend the staple leg **1406** to a second, or opposite, side of base **1402**.

**[0246]** In various embodiments, further to the above, the vertical trap comprising vertical portions **1516***a* and **1526***a* can extend along the entire length of the first and second interior sidewalls **1516** and **1526**, while, in other embodiments, the vertical trap may extend along only a portion of the sidewalls **1516** and **1526**. In at least one embodiment, the vertical trap can be approximately 0.05 inches long, i.e., the overlap of the first vertical surface **1516***a* and the second vertical surface **1526***a* can be approximately 0.05 inches, for example, along the lengths of interior surfaces **1516** and **1526**. In various embodiments, the length of the vertical trap can be between approximately 0.03 inches and approximately 0.10 inches, for example. In certain embodiments, the length of the vertical trap can be approximately twice the radius of curvature (r) of the curved concave surface of base **1506**, for example. In various embodiments, the length of the vertical trap can be approximately equal to the radius of curvature (r) of base **1506**, for example. In at least one embodiment, the length of the vertical trap can be between approximately 0.5*r and approximately 2*r, for example. In various embodiments, further to the above, the vertical trap can extend through the longitudinal axis **1599** of staple pocket **1500** such that, in at least one embodiment, at least a portion of the vertical trap can be positioned on a first side and/or a second side of axis **1599**. In certain embodiments, the vertical trap can extend through the central portions of the first and second forming cups **1502** and **1504**.

**[0247]** In various embodiments, the first interior sidewall **1516** can further comprise a first angled portion which, in at least one embodiment, can be oriented at an acute angle with respect to the tissue-contacting surface **1501**. In at least one such embodiment, the first angled portion can be positioned outwardly with respect to the first vertical portion **1516***a*. In certain embodiments, the first interior sidewall **1516** can comprise an angled portion positioned toward the outside portion **1512** which can become progressively more perpendicular toward the inside portion **1510** of the first forming cup

**1502** until the angled portion transitions into the first vertical portion **1516***a*. In various embodiments, the second interior sidewall **1526** can further comprise a second angled portion which, in at least one embodiment, can be oriented at an acute angle with respect to the tissue-contacting surface **1501**. In at least one such embodiment, the second angled portion can be positioned outwardly with respect to the second vertical portion **1526***a*. In certain embodiments, the second interior sidewall **1526** can comprise an angled portion positioned toward the outside portion **1522** which can become progressively more perpendicular toward the inside portion **1520** of the second forming cup **1504** until the angled portion transitions into the second vertical portion **1526***a*.

**[0248]** In various embodiments, referring now to FIG. **85**A, the staple pocket **1500** can be configured to deform the first staple leg **1404** such that the first end **1405** is deflected a first distance X**1** from baseline **1401**. Similarly, the second staple leg **1406** can be deformed such that the second end **1407** is deflected a second distance X**2** from baseline **1401**. In certain embodiments, the distance X**1** and the distance X**2** can be the same, or at least substantially the same. In various other embodiments, the distances X**1** and X**2** can be different. In at least one such embodiment, the first leg **1404** can be deformed such that the first end **1405** is positioned closer to base **1402** than the second end **1407**, for example. In such embodiments, the first axis **1414** of deformed staple leg **1404** and the second axis **1416** of deformed staple leg **1406** may be non-parallel. More particularly, in at least one embodiment, the first axis **1414** can extend at a first angle with respect to baseline **1401** and the second axis **1416** can extend at a second angle with respect to baseline **1401** wherein the second angle is different than the first angle. In various embodiments, the first leg **1404** and the second leg **1406** can extend across midline **1403** at different angles. In certain other embodiments, the first leg **1404** and the second leg **1406** can be extend at different angles with respect to baseline **1401** although one or both of the legs **1404** and **1406** may not extend across the midline **1403**.

**[0249]** In various embodiments, further to the above, a surgical stapler can comprise a staple pocket which can be configured to deform one staple leg of staple **1400** such that it lies within, or substantially within, a common plane with base **1402** and, in addition, deform the other staple leg of staple **1400** to a side of base **1402** as described above. In at least one embodiment, the first leg **1404** can be deformed such that it extends through midline **1403** in a direction which is co-planar, or at least substantially co-planar, with base **1402** and, in addition, the second leg **1406** can be deformed such that it extends through midline **1403** in a direction which is transverse to the plane. Stated another way, in at least one embodiment, axis **1414** and baseline **1401** of staple **1400** can be coplanar, or at least nearly co-planar, with one another while second axis **1416** can extend in a direction which extends through such a plane. In certain embodiments, at least one of the first leg **1404** and the second leg **1406** may not extend through the midline **1403**.

**[0250]** In various embodiments, further to the above, the staple pocket **1500** can be configured to deform the staple legs **1404** and **1406** of staple **1400** simultaneously, or at least substantially simultaneously. In at least one embodiment, the base **1506** of first forming cup **1502** can contact end **1405** of first staple leg **1404** at the same time, or at least substantially the same time, that the base **1508** of second forming cup **1504** contacts end **1407** of second staple leg **1406**. In certain other embodiments, a staple pocket can be configured to deform the staple legs **1404** and **1406** sequentially. In at least one such embodiment, a first forming cup can be brought into contact with the first staple leg **1404** before a second forming cup is brought into contact with the second staple leg **1406**, for example. In various alternative embodiments, although not illustrated, a surgical staple can comprise more than two staple legs, such as three staple legs or four staple legs, for example, and a staple pocket can comprise a corresponding quantity of staple forming cups for deforming the staple legs.

**[0251]** In various embodiments, further to the above, the wire comprising the surgical staple **1400** can comprise a circular, or at least substantially circular, cross-section. In various other embodiments, referring now to FIGS. **86-89**, a surgical staple, such as staple **1600**, for example, can comprise a non-circular cross-section. In at least one embodiment, the staple **1600** can comprise a base **1602**, a first leg **1604**, and a second leg **1606**, wherein the base **1602** and legs **1604** and **1606** can be comprised of a continuous wire. In various embodiments, the continuous wire can comprise a rectangular cross-section, for example. In at least one embodiment, referring to FIG. **89**, the rectangular cross-section can comprise a base (b) and a height (h), wherein the base (b) can be defined relative to a central lateral axis (x), and wherein the height (h) can be defined relative to a central longitudinal axis (y). In various circumstances, the rectangular cross-section can be defined as having two moments of inertia, i.e., a first moment of inertia (Ix) defined with respect to axis (x) and a second moment of inertia (Iy) defined with respect to axis (y). In at least one circumstance, the first moment of inertia (Ix) can be calculated as (b*h^3)/12 while the second moment of inertia (Iy) can be calculated as (h*b^3)/12. Although staple **1600** comprises a rectangular, or at least substantially rectangular cross-section, any other suitable non-circular cross-section can be utilized, such as oblate, elliptical, and/or trapezoidal cross-sections, for example.

**[0252]** As illustrated in FIG. **89**, the base (b) of surgical staple **1600** is larger than the height (h) and, in view of the above, the moment of inertia (Iy) of the rectangular cross-section is larger than the moment of inertia (Ix). In various embodiments, as a result, the moment of inertia ratio, i.e., Iy/Ix, of the rectangular cross-section can be greater than 1.0. In certain embodiments, the moment of inertia ratio can be between approximately 2.0 and approximately 2.7, for example. In certain other embodiments, the moment of inertia ratio can be between approximately 1.1 and approximately 3.0, for example. As a result of the above, the leg **1604** is more likely to bend about axis (x) than about axis (y) when a force, such as compressive load F**1**, for example, is applied to the leg **1604**. In any event, absent all other considerations, the leg **1604**, in such embodiments, is more likely to bend within a common plane defined by the staple **1600** when it is in its undeformed state than bend to a side of staple base **1602**. In various embodiments, however, a surgical stapler comprising an anvil and staple pocket in accordance with the embodiments described herein, such as staple pocket **1500**, for example, can be utilized to cause the legs **1604** and **1606** of staple **1600** to bend out of their common plane when they are deformed. In such embodiments, this lateral deflection can occur despite the fact that the moment of inertia Iy, which resists such twisting, is greater than the moment of inertia **1***x*. As illustrated in FIG. **88**, the first leg **1604** of staple **1600** can be deformed such that it is bent relative to both axis (x) and axis (y) of its cross-section and, as a result, the first staple leg

**1604** can be twisted or deformed such that the end **1605** of first staple leg **1604** is positioned on a first side of base **1602**. Similarly, the second leg **1606** can be deformed such that it is bent relative to both axis (x) and axis (y) of its cross-section and, as a result, the second staple leg **1606** can be twisted or deformed such that the end **1607** of second staple leg **1606** is positioned on a second side of base **1602**.

**[0253]** In various embodiments, referring now to FIG. **90**, a surgical staple, such as surgical staple **1700**, for example, can comprise a base **1702** and, in addition, a first leg **1704** and a second leg **1706** extending from base **1702**. In certain embodiments, similar to the above, the base **1702**, the first leg **1704**, and the second leg **1706** can lie, or at least substantially lie, in a common plane when the staple **1700** is an undeformed, or undeployed, configuration, i.e., a configuration prior to being deformed by an anvil of a surgical stapler, for example. In the deformed or deployed configuration of staple **1700**, as illustrated in FIG. **90**, the first leg **1704** can be deformed such that end **1705** points toward base **1702** and second leg **1706**. More particularly, in at least one embodiment, the end **1705** can lie along, or with respect to, a first axis **1714** which is oriented at angle with respect to midline **1703**. Similarly, the second leg **1706** can be deformed such that end **1707** points toward base **1702** and first leg **1704**. More particularly, in at least one embodiment, the end **1707** can lie along, or with respect to, a second axis **1716** which is oriented at angle with respect to midline **1703**. In various embodiments, the ends **1705** and **1707** of legs **1704** and **1706** may not cross mid-line **1703**. In certain embodiments, similar to the above, the end **1705** of first leg **1704** may be deformed such that it extends to a first side of base **1702** and the end **1707** of second leg **1706** may be deformed such that it extends to a second, or opposite, side of base **1702** such that legs **1704** and **1706** are not entirely positioned in-plane with base **1702** in their deformed configuration, for example.

**[0254]** In various embodiments, a surgical staple, such as staple **1800** (FIG. **91**), for example, can comprise a base **1802**, a first leg **1804**, and a second leg **1806**, wherein the staple **1800** can comprise a substantially U-shaped configuration in its undeformed, or undeployed, configuration. In at least one such embodiment, legs **1804** and **1806** can extend in a perpendicular, or at least substantially perpendicular, direction with respect to base **1802**. In various circumstances, the staple **1800** can be deformed into a B-shaped configuration as illustrated in FIG. **91**. In at least one such embodiment, the first leg **1804** can be bent downwardly toward base **1802** such that axis **1814** extending through end **1805** is perpendicular, or at least substantially perpendicular, to baseline **1801**. Similarly, the second leg **1806** can be bent downwardly toward base **1802** such that axis **1816** extending through end **1807** is perpendicular, or at least substantially perpendicular, to baseline **1801**. In at least one such circumstance, the legs **1804** and **1806** can be bent such that axes **1814** and **1816** are parallel, or at least substantially parallel, to one another. In various embodiments, referring again to FIG. **91**, the staple legs **1804** and **1806** can be deformed such that they do not cross centerline **1803**. The staple legs **1804** and **1806** can be deformed such that they remain in-plane, or at least substantially in-plane, with base **1802**.

**[0255]** Various examples described below are envisioned which incorporate one or more aspects of the various embodiments described above. Such examples are exemplary and various aspects of various embodiments described in this application can be combined in a single embodiment. In each of the examples described below, the surgical staple can comprise a base defining a baseline, a first leg and a second leg which extend from the base, and a midline midway between the first leg and the second leg.

Example 1

**[0256]** A surgical staple can be deformed such that:

| First Leg | Second Leg |
|---|---|
| Crosses the midline (FIG. 83) | Crosses the midline (FIG. 83) |
| Extends in-plane, or substantially in-plane, with the base (FIG. 91) | Extends out of plane with the base (FIG. 85) |
| The end extends in a non-perpendicular direction with the baseline (FIG. 83) | The end extends in a non-perpendicular direction with the baseline (FIG. 83) |

Example 2

**[0257]** A surgical staple can be deformed such that:

| First Leg | Second Leg |
|---|---|
| Crosses the midline (FIG. 83) | Crosses the midline (FIG. 83) |
| Extends out of plane with the base (FIG. 85) to the same side of the base as the second leg, the distance X1 being different than X2 (FIG. 85A) | Extends out of plane with the base (FIG. 85) to the same side of the base as the first leg, the distance X1 being different than X2 (FIG. 85A) |
| The end extends in a non-perpendicular direction with the baseline (FIG. 83) | The end extends in a non-perpendicular direction with the baseline (FIG. 83) |

Example 3

**[0258]** A surgical staple can be deformed such that:

| First Leg | Second Leg |
|---|---|
| Does not cross the midline (FIG. 90)<br>Extends out of plane with the base (FIG. 85) to a first side of the base, the distance X1 being different than X2 (FIG. 85A)<br>The end extends in a non-perpendicular direction with the baseline (FIG. 83) | Does not cross the midline (FIG. 90)<br>Extends out of plane with the base (FIG. 85) to a second side of the base, the distance X1 being different than X2 (FIG. 85A)<br>The end extends in a non-perpendicular direction with the baseline (FIG. 83) |

Example 4

**[0259]** A surgical staple can be deformed such that:

| First Leg | Second Leg |
|---|---|
| Does not cross the midline (FIG. 90)<br>Extends out of plane with the base (FIG. 85) to the same side of the base as the second leg, the distance X1 being different than X2 (FIG. 85A)<br>The end extends in a non-perpendicular direction with the baseline (FIG. 83) | Does not cross the midline (FIG. 90)<br>Extends out of plane with the base (FIG. 85) to the same side of the base as the second leg, the distance X1 being different than X2 (FIG. 85A)<br>The end extends in a non-perpendicular direction with the baseline (FIG. 83) |

Example 5

**[0260]** A surgical staple can be deformed such that:

| First Leg | Second Leg |
|---|---|
| Does not cross the midline (FIG. 90)<br>Extends in-plane, or substantially in-plane, with the base (FIG. 91)<br>The end extends in a perpendicular direction with the baseline (FIG. 91) | Does not cross the midline (FIG. 90)<br>Extends out of plane with the base (FIG. 85)<br>The end extends in a non-perpendicular direction with the baseline (FIG. 83) |

Example 6

**[0261]** A surgical staple can be deformed such that:

| First Leg | Second Leg |
|---|---|
| Crosses the midline (FIG. 83)<br>Extends out of plane with the base (FIG. 85) to a first side of the base, the distance X1 being different than X2 (FIG. 85A)<br>The end extends in a non-perpendicular direction with the baseline (FIG. 83) | Does not cross the midline (FIG. 90)<br>Extends out of plane with the base (FIG. 85) to a second side of the base, the distance X1 being different than X2 (FIG. 52A)<br>The end extends in a non-perpendicular direction with the baseline (FIG. 83) |

Example 7

**[0262]** A surgical staple can be deformed such that:

| First Leg | Second Leg |
|---|---|
| Crosses the midline (FIG. 83) | Does not cross the midline (FIG. 90) |
| Extends out of plane with the base (FIG. 85) to the same side of the base as the second leg, the distance X1 being different than X2 (FIG. 85A) | Extends out of plane with the base (FIG. 85) to the same side of the base as the second leg, the distance X1 being different than X2 (FIG. 85A) |
| The end extends in a non-perpendicular direction with the baseline (FIG. 83) | The end extends in a non-perpendicular direction with the baseline (FIG. 83) |

Example 8

**[0263]** A surgical staple can be deformed such that:

| First Leg | Second Leg |
|---|---|
| Crosses the midline (FIG. 83) | Does not cross the midline (FIG. 90) |
| Extends out of plane with the base (FIG. 85) | Extends in-plane, or substantially in-plane, with the base (FIG. 91) |
| The end extends in a non-perpendicular direction with the baseline (FIG. 83) | The end extends in a perpendicular direction to the baseline (FIG. 91) |

Example 9

**[0264]** A surgical staple can be deformed such that:

| First Leg | Second Leg |
|---|---|
| Crosses the midline (FIG. 83) | Does not cross the midline (FIG. 90) |
| Extends in-plane, or substantially in-plane, with the base (FIG. 91) | Extends out of plane with the base (FIG. 85) |
| The end extends in a non-perpendicular direction with the baseline (FIG. 83) | The end extends in a non-perpendicular direction with the baseline (FIG. 83) |

**[0265]** Several of the deformed staples described above comprise one or more staple legs which cross the mid-line of the staple base. In various embodiments, as a result, the deformed staple legs may at least partially overlap with one another. More particularly, the deformed staple legs, when viewed from the side, may co-operate to traverse the staple base from one end to the other leaving no gap therebetween. Such embodiments can be particularly useful, especially when used to staple vascular tissue. More specifically, the overlapping staple legs can compress blood vessels within the tissue regardless of where the blood vessels extend through the staple. Staples having gaps between the legs, or legs which do not extend along the entire length of the staple base when deformed, may not be able to properly compress every blood vessel in the tissue and, as a result, one or more blood vessels may leak.

**[0266]** In various embodiments, further to the above, a surgical instrument can be configured to deploy a plurality of staples **1400** in the manner described above and illustrated in FIGS. **83-85**. In at least one such embodiment, the surgical stapler can deploy the staples **1400** in a sequential manner along a staple path and/or in a simultaneous manner, for example. In certain embodiments, a surgical instrument can be configured to deploy a plurality of staples **1600** in the manner described above and illustrated in FIG. **88**. In at least one such embodiment, similar to the above, the surgical stapler can deploy the staples **1600** in a sequential manner along a staple path and/or in a simultaneous manner, for example. In various embodiments, further to the above, a surgical instrument can be configured to deploy a plurality of staples **1700** in the manner described above and illustrated in FIG. **90**. In at least one such embodiment, the surgical stapler can deploy the staples **1700** in a sequential manner along a staple path and/or in a simultaneous manner, for example.

**[0267]** In various embodiments, referring now to FIGS. **103-108**, a surgical stapling instrument **2100** can comprise, similar to the above, a first housing portion **2102** and a second housing portion **2104** which can be operably connected to one another by a latch **2180**. Latch **2180** can comprise a frame **2184** which can be pivotably mounted to a frame **2110** of first housing portion **2102**. In use, the latch **2180** can be configured to engage a frame **2114** of second housing portion **2104** and draw the second housing portion **2104** toward the first housing portion **2102** and move the anvil support portion **2130** of second housing portion **2104** toward the staple cartridge support portion **2124** of first housing portion **2102**. In various

embodiments, the first housing portion **2102**, the second housing portion **2104**, and the latch **2180** can each comprise one or more contoured outer housings or gripping portions, for example. In at least one such embodiment, the first housing portion **2102** can comprise an outer housing **2108**, the second housing portion **2104** can comprise an outer housing **2112**, and the latch **2180** can comprise an outer housing **2186**. The surgical stapling instrument **2100** can further comprise a firing actuator **2204** which can, similar to the above, be selectively positioned on opposite sides of the surgical stapling instrument. More particularly, further to the above, the actuator **2204** can be selectively positioned on a first side of the housing portions **2102**, **2104** such that the actuator **2204** can be moved distally along the first side or selectively positioned on a second side of the housing portions **2102**, **2104** such that the actuator **2204** can be moved distally along the second side. In at least one embodiment, the first housing portion **2102** and the second housing portion **2104** can define one or more slots **2118** therebetween which can permit the actuator **2204** to be moved along the first and second sides. In at least one such embodiment, the slots **2118** can be connected by an intermediate slot **2331** which can extend around and/or through the proximal end of the surgical stapling instrument **2100**.

**[0268]** Further to the above, referring to FIGS. **103-111**, the firing actuator **2204** can be rotatably mounted to a drive bar **2220**, wherein, in at least one embodiment, the actuator **2204** can be rotatably mounted to the drive bar **2220** via a connecting link **2206**. Referring primarily to FIGS. **109-111**, the actuator **2204** can be rotated between an intermediate, or neutral, position (FIG. **109**) in which the drive bar **2220** is locked in position and cannot be advanced distally and an unlocked position (FIG. **110**) in which the drive bar **2220** and the actuator **2204** are ready to be fired distally. Although FIG. **110** illustrates the actuator **2204** in an unlocked position on the first side of the surgical stapling instrument housing, the actuator **2204** can also be moved into an unlocked position on the opposite, or second, side of the surgical stapling instrument housing. The following example, although discussed in connection with the actuator **2204** being moved along the first side of the housing, is also applicable in connection with the actuator **2204** being moved along the second side of the housing. In any event, the actuator **2204** and the first housing portion **2102**, for example, can comprise various interlocking features which can prevent, or at least limit, relative movement between the drive bar **2220** and the first housing portion **2102**. More particularly, in at least one embodiment, the first housing portion **2102** can comprise one or more slots and/or one or more projections which can be configured to co-operate with one or more slots and/or one or more projections of actuator **2204** such that the drive bar **2220** cannot be advanced distally until the actuator **2204** has been sufficiently rotated out of its neutral position and into an unlocked position. In various embodiments, the proximal end of the first housing portion **2102** can comprise an end post **2107** which can include a retention slot **2213** configured to receive at least a portion of actuator link **2206**, such as retention projection **2214**, therein. When the actuator **2204** is in its neutral position, the retention projection **2214** is positioned in the retention slot **2213** and neither the actuator **2204** nor the driver bar **2220** can be advanced distally. As the actuator **2204** is rotated toward an unlocked position, the retention projection **2214** can move out of the retention slot **2213** in end post **2107** and into a receiving slot **2215** in driver bar **2220** as illustrated in FIG. **110**. In at least one embodiment, the driver bar **2220** and actuator **2204** can remain in a locked condition until the retention projection **2214** has completely exited the retention slot **2213**. Thereafter, the actuator **2204** can be advanced distally. In addition to or lieu of the above, the end post **2107** can further comprise a retention wall **2211** which can, similar to the above, impede the distal movement of actuator **2204** and drive bar **2220**. More particularly, the actuator link **2206** can further comprise a retention projection **2216** which can be positioned behind, or distally with respect to, the retention wall **2211** when the actuator **2204** is in its neutral position and, owing to such alignment, the retention wall **2211** can provide a bearing surface preventing the distal movement of retention projection **2216**. Once actuator **2204** has been sufficiently rotated out of its neutral position toward an unlocked position, the retention projection **2216** can be moved to a position in channel **2217** which is out of longitudinal alignment with the retention wall **2211** thereby permitting relative longitudinal movement therebetween.

**[0269]** As described above, once the actuator **2204** has been moved into an unlocked position (FIG. **110**), the actuator **2204** can be advanced distally into a fired position (FIG. **111**). In such circumstances, referring now to FIG. **106**, a force can be applied to the actuator **2204** in order to advance drive bar **2220** distally and incise tissue and/or deploy staples from a staple cartridge as described above. In such circumstances, the force can rotate and seat the actuator **2204** in a fully-deployed, or an at least nearly fully-deployed, position. In at least one embodiment, the drive bar **2220** can comprise one or more stops, such as stops **2221** (FIG. **111**), for example, which can limit the rotation of the actuator **2204** in the distal direction. In at least one such embodiment, the drive bar **2220** can comprise a first stop **2221** configured to limit the rotation of the actuator **2204** toward the first side of the instrument and a second stop **2221** configured to limit the rotation of the actuator toward the second side of the instrument. In certain embodiments, referring to FIG. **106**, the stops **2221** can be configured such that the actuator **2204** is positioned along an axis which is perpendicular, or at least substantially perpendicular, to a longitudinal axis **2299** of the surgical stapling instrument **2100**. Such a position of actuator **2204** is also illustrated in FIG. **104**. Referring now to FIG. **107**, a force can be applied to the actuator **2204** in order to retract the actuator **2204** proximally. In such circumstances, the force can cause the actuator **2204** to rotate proximally until it comes into contact with the first housing portion **2102** and/or the second housing portion **2104**. Such a position of actuator **2204** is also illustrated in FIG. **105** wherein the actuator **2204** can be positioned against lock rail **2131** and/or lock rail **2132**, for example, in order to prevent any further rotation of the actuator **2204**.

**[0270]** In various embodiments, as described above, the latch **2180** can be utilized to lock the first housing portion **2102** and the second housing portion **2104** together. In certain embodiments, the actuator **2204** can be utilized to limit the relative movement between the housing portions **2102**, **2104** and/or move the housing portions **2102**, **2104** toward one another. In at least one embodiment, referring primarily to FIGS. **103**, **104**, and **108**, the actuator **2204** can comprise a recess, or channel, **2130** which can be configured to receive the lock rails **2131** and **2132** when the actuator **2204** is moved along the first side of the surgical stapling instrument **2100** or, alternatively, receive the lock rails **2133** and **2134** when the actuator **2204** is moved along the second side of the surgical stapling instrument **2100**. In either event, the recess **2130** can

be configured to capture an opposing set of rails, such as rails **2131** and **2132**, for example, and prevent, or at least limit, relative movement therebetween. More particularly, in at least one embodiment, the recess **2130** can comprise a first bearing surface **2135** positioned opposite the first lock rail **2131** and a second bearing surface **2136** positioned opposite the second lock rail **2132** such that the bearing surfaces **2135**, **2136** can prevent, or at least limit, the movement of the first housing portion **2102** and the second housing portion **2104** away from one another. In some circumstances, gaps may exist between the bearing surfaces **2135**, **2136** and the lock rails **2131**, **2132**, respectively, when the bearing surfaces **2135**, **2136** are adjacent to the lock rails **2131**, **2132** while, in other circumstances, the bearing surface **2135** may contact the lock rail **2131** and/or the bearing surface **2136** may contact the lock rail **1232**, for example. In use, in various circumstances, the actuator **2204** can be moved from its neutral position (FIG. **109**) into an unlocked position (FIG. **110**) wherein, in such a position, the recess **2130** can be aligned with either a set of rails **2131**, **2132** or a set of rails **2133**, **2134** depending on whether the actuator **2204** has been rotated to the first or second side. When the actuator **2204** is advanced distally, in some circumstances, the actuator **2204** may contact the rails and cam, or drive, the rails toward each other. In such circumstances, the first housing portion **2102** and the second housing portion **2104** can be cammed, or driven, toward one another.

**[0271]** In various embodiments, as described above, the actuator **2204** can receive, capture, and/or engage a lock rail extending from each of the first housing portion **2102** and the second housing portion **2104**. In various alternative embodiments, the actuator **2204** can be configured to receive, capture, and/or engage two or more lock rails extending from the first housing portion **2102** and/or the second housing portion **2104**. In certain embodiments, the first housing portion **2102** and/or the second housing portion **2104** can comprise one or more lock channels which can be configured to receive at least a portion of the actuator. In various embodiments, the housing portions and the actuator of the surgical stapling instrument can comprise any suitable lock portions which can be configured to receive, align, retain, capture, lock, move, cam, and/or limit the movement of the surgical instrument housing portions. In various embodiments, referring primarily to FIGS. **106** and **107**, the lock rails **2131**, **2132**, **2133**, and/or **2134** can extend longitudinally along the stapling instrument **2100** such that, in at least one embodiment, they extend in a longitudinal direction from the proximal end of the surgical stapling instrument **2100** toward the distal end of the instrument which is parallel, or at least substantially parallel, to longitudinal axis **2299**. Furthermore, in at least one embodiment, the lock rails **2131**, **2132**, **2133**, and/or **2134** can extend in directions which are parallel, or at least substantially parallel, to one another.

**[0272]** In various embodiments, further to the above, a surgical staple can be comprised of titanium, such as titanium wire, for example. In certain embodiments, a surgical staple can be comprised of an alloy comprising titanium, aluminum, and/or vanadium, for example. In at least one embodiment, the surgical staple can be comprised of surgical stainless steel and/or an alloy comprised of cobalt and chromium, for example. In any event, the surgical staple can be comprised of metal, such as titanium, and a metal oxide outer surface, such as titanium oxide, for example. In various embodiments, the metal oxide outer surface can be coated with a material. In certain embodiments, the coating material can be comprised of polytetrafluoroethylene (PTFE), such as Teflon®, and/or a tetrafluoroehtylene (TFE) such as ethylene-tetrafluoroehtylene (ETFE), perfluroralkoxyethylene-tetrafluoroehtylene (PFA), and/or Fluorinated Ethylene Propylene (FEP), for example. Certain coatings can comprise silicon. In various embodiments, such coating materials can prevent, or at least inhibit, further oxidation of the metal. In certain embodiments, the coating materials can provide one or more lubricious surfaces against which the anvil, or staple pockets, can contact the staples in order to reduce the friction force therebetween. In various circumstances, lower friction forces between the staples and the staple pockets can reduce the force required to deform the staples.

**[0273]** The devices disclosed herein can be designed to be disposed of after a single use, or they can be designed to be used multiple times. In either case, however, the device can be reconditioned for reuse after at least one use. Reconditioning can include any combination of the steps of disassembly of the device, followed by cleaning or replacement of particular pieces, and subsequent reassembly. In particular, the device can be disassembled, and any number of the particular pieces or parts of the device can be selectively replaced or removed in any combination. Upon cleaning and/or replacement of particular parts, the device can be reassembled for subsequent use either at a reconditioning facility, or by a surgical team immediately prior to a surgical procedure. Those skilled in the art will appreciate that reconditioning of a device can utilize a variety of techniques for disassembly, cleaning/replacement, and reassembly. Use of such techniques, and the resulting reconditioned device, are all within the scope of the present application.

**[0274]** Preferably, the invention described herein will be processed before surgery. First, a new or used instrument is obtained and if necessary cleaned. The instrument can then be sterilized. In one sterilization technique, the instrument is placed in a closed and sealed container, such as a plastic or TYVEK bag. The container and instrument are then placed in a field of radiation that can penetrate the container, such as gamma radiation, x-rays, or high-energy electrons. The radiation kills bacteria on the instrument and in the container. The sterilized instrument can then be stored in the sterile container. The sealed container keeps the instrument sterile until it is opened in the medical facility.

**[0275]** While this invention has been described as having exemplary designs, the present invention may be further modified within the spirit and scope of the disclosure. This application is therefore intended to cover any variations, uses, or adaptations of the invention using its general principles. Further, this application is intended to cover such departures from the present disclosure as come within known or customary practice in the art to which this invention pertains.

What is claimed is:

**1**. A surgical stapling instrument, comprising:
a first side;
a second side;
a longitudinal axis;
a first housing member, comprising:
a staple cartridge attachment portion configured to operably support a staple cartridge; and
a first lock rail extending along said longitudinal axis;
a second housing member, comprising:
a jaw member configured to operably support an anvil configured to deform staples deployed from the staple cartridge; and
a second lock rail extending along said longitudinal axis;
a pusher bar configured to move a staple driver relative to said staple cartridge attachment portion and said jaw member; and

an actuator configured to receive a force thereto, wherein said actuator is configured to be moved between a first position and a second position, wherein said actuator is configured to be moved along said first side when said actuator is in said first position, wherein said actuator is configured to be moved along said second side when said actuator is in said second position, and wherein said actuator further comprises at least one lock rail receiver configured to receive said first lock rail and said second lock rail.

**2**. The surgical stapling instrument of claim **1**, wherein said at least one lock rail receiver comprises a first bearing surface configured to engage said first lock rail and a second bearing surface configured to engage said second lock rail, and wherein said first bearing surface and said second bearing surface are configured to move said first housing member and said second housing member toward each other.

**3**. The surgical stapling instrument of claim **1**, wherein said at least one lock rail receiver comprises a first bearing surface positioned adjacent to said first lock rail and a second bearing surface positioned adjacent to said second lock rail, and wherein said first bearing surface and said second bearing surface are configured to limit relative movement between said first lock rail and said second lock rail.

**4**. The surgical stapling instrument of claim **3**, wherein said first bearing surface and said second bearing surface define opposite sides of a channel.

**5**. The surgical stapling instrument of claim **1**, wherein said first lock rail and said second lock rail extend from said first side, wherein said at least one lock rail receiver is configured to receive said first lock rail and said second lock rail when said actuator is in said first position, wherein said first housing member further comprises a third lock rail extending from said second side, wherein said second housing member further comprises a fourth lock rail extending from said second side, and wherein said at least one lock rail receiver is configured to receive said third lock rail and said fourth lock rail when said actuator is in said second position.

**6**. The surgical stapling instrument of claim **1**, further comprising said anvil.

**7**. The surgical stapling instrument of claim **6**, further comprising said staple cartridge.

**8**. A surgical stapling instrument, comprising:

a first side;

a second side;

a first housing member, comprising:

a first proximal end portion;

a first distal end portion;

a staple cartridge attachment portion configured to operably support a staple cartridge; and

a first longitudinal lock portion extending from said first proximal end portion toward said first distal end portion;

a second housing member, comprising:

a second proximal end portion;

a second distal end portion;

a jaw member configured to operably support an anvil configured to deform staples deployed from the staple cartridge; and

a second longitudinal lock portion extending from said second proximal end portion toward said second distal end portion;

a drive member configured to move a staple driver relative to said staple cartridge attachment portion and said jaw member; and

an actuator configured to receive a force thereto, wherein said actuator is configured to be moved between a first position and a second position, wherein said actuator is configured to be moved along said first side when said actuator is in said first position, wherein said actuator is configured to be moved along said second side when said actuator is in said second position, and wherein said actuator further comprises at least one actuator lock portion configured to be aligned with said first longitudinal lock portion and said second longitudinal lock portion.

**9**. The surgical stapling instrument of claim **8**, wherein said at least one actuator lock portion comprises a first bearing surface configured to engage said first longitudinal lock portion and a second bearing surface configured to engage said second longitudinal lock portion, and wherein said first bearing surface and said second bearing surface are configured to move said first housing member and said second housing member toward each other.

**10**. The surgical stapling instrument of claim **8**, wherein said at least one actuator lock portion comprises a first bearing surface positioned adjacent to said first longitudinal lock portion and a second bearing surface positioned adjacent to said second longitudinal lock portion, and wherein said first bearing surface and said second bearing surface are configured to limit relative movement between said first housing member and said second housing member.

**11**. The surgical stapling instrument of claim **10**, wherein said first bearing surface and said second bearing surface define opposite sides of a channel.

**12**. The surgical stapling instrument of claim **8**, wherein said first longitudinal lock portion and said second longitudinal lock portion extend from said first side, wherein said at least one actuator lock portion is configured to receive said first longitudinal lock portion and said second longitudinal lock portion when said actuator is in said first position, wherein said first housing member further comprises a third longitudinal lock portion extending from said second side, wherein said second housing member further comprises a fourth longitudinal lock portion extending from said second side, and wherein said at least one actuator lock rail portion is further configured to be aligned with said third longitudinal lock portion and said fourth longitudinal lock portion when said actuator is in said second position.

**13**. The surgical stapling instrument of claim **8**, further comprising said staple cartridge.

**14**. The surgical stapling instrument of claim **8**, further comprising said anvil.

**15**. A surgical stapling instrument, comprising:

a first side;

a second side;

a longitudinal axis;

a first housing member, comprising:

a staple cartridge attachment portion configured to operably support a staple cartridge; and

a first lock rail extending along said longitudinal axis;

a second housing member, comprising:

a jaw member configured to operably support an anvil configured to deform staples deployed from the staple cartridge; and

a second lock rail extending along said longitudinal axis;

a pusher bar configured to move a staple driver relative to said staple cartridge attachment portion and said jaw member; and

an actuator configured to receive a force thereto, wherein said actuator is configured to be moved between a first position and a second position, wherein said actuator is configured to be moved along said first side when said actuator is in said first position, wherein said actuator is configured to be moved along said second side when said actuator is in said second position, and wherein said actuator further comprises capturing means for capturing said first lock rail and said second lock rail.

**16**. The surgical stapling instrument of claim **15**, wherein said capturing means comprises a first bearing surface configured to engage said first lock rail and a second bearing surface configured to engage said second lock rail, and wherein said first bearing surface and said second bearing surface are configured to move said first housing member and said second housing member toward each other.

**17**. The surgical stapling instrument of claim **15**, wherein said capturing means comprises a first bearing surface positioned adjacent to said first lock rail and a second bearing surface positioned adjacent to said second lock rail, and wherein said first bearing surface and said second bearing surface are configured to limit relative movement between said first lock rail and said second lock rail.

**18**. The surgical stapling instrument of claim **17**, wherein said first bearing surface and said second bearing surface define opposite sides of a channel.

**19**. The surgical stapling instrument of claim **15**, wherein said first lock rail and said second lock rail extend from said first side, wherein said capturing means is configured to receive said first lock rail and said second lock rail when said actuator is in said first position, wherein said first housing member further comprises a third lock rail extending from said second side, wherein said second housing member further comprises a fourth lock rail extending from said second side, and wherein said capturing means is configured to receive said third lock rail and said fourth lock rail when said actuator is in said second position.

**20**. The surgical stapling instrument of claim **15**, further comprising said staple cartridge.

**21**. The surgical stapling instrument of claim **15**, further comprising said anvil.

* * * * *