(19) Europäisches Patentamt
European Patent Office
Office européen des brevets

(11) Publication number: **0 225 123 B1**

(12) # EUROPEAN PATENT SPECIFICATION

(45) Date of publication of patent specification: **24.03.93**

(51) Int. Cl.5: **G02B 5/124**, G02B 6/00

(21) Application number: **86309049.4**

(22) Date of filing: **19.11.86**

(54) **A totally internally reflecting thin, flexible film.**

(30) Priority: **21.11.85 US 799869**

(43) Date of publication of application:
10.06.87 Bulletin 87/24

(45) Publication of the grant of the patent:
24.03.93 Bulletin 93/12

(84) Designated Contracting States:
DE FR GB IT NL SE

(56) References cited:
EP-A- 0 142 250
FR-A- 2 551 180
GB-A- 1 426 230
US-A- 4 260 220
US-A- 4 466 697

(73) Proprietor: **MINNESOTA MINING AND MANUFACTURING COMPANY**
3M Center, P.O. Box 33427
St. Paul, Minnesota 55133-3427(US)

(72) Inventor: **Cobb, Sanford, Jr. c/o Minnesota Mining and Manufacturing Co.2501 Hudson Road P.O. Box 33427**
St. Paul Minnesota 55133-3427(US)

(74) Representative: **Baillie, Iain Cameron et al**
c/o Ladas & Parry, Altheimer Eck 2
W-8000 München 2 (DE)

Note: Within nine months from the publication of the mention of the grant of the European patent, any person may give notice to the European Patent Office of opposition to the European patent granted. Notice of opposition shall be filed in a written reasoned statement. It shall not be deemed to have been filed until the opposition fee has been paid (Art. 99(1) European patent convention).

EP 0 225 123 B1

Description

Technical Field and Background Art

The present invention relates to a thin, flexible film made of a transparent material having a structured surface on one side and a smooth surface opposite the structured surface on the other side, one aspect of which is that the combination of surfaces may totally internally reflect light.

It is well known, to those skilled in the art, to form thin, flexible films structured on one side to deflect light, as illustrated in U.S. Patent No. 2,248,636. In addition, mirrors have been used to reflect light and the making of mirrors is also well known to those skilled in the art as described in, for example, U.S. Patent No. 2,723,919. However, there are limitations associated with the use of mirrors. Commercially available mirrors, even when new, have limited reflectivities that normally range from about 75% to about 95%, and, when, with the passing of time, the reflective coating becomes tarnished, the efficiency decreases.

The principle of total internal reflection has been recognized by optical engineers, as an alternative to mirrors, for many decades for reflectors and luminairs, as illustrated in U.S. Patent Nos. 2,175,067 and 4,260,220 and also in FR-A-2551180. Its application can be found in various optical instruments, for example, the porro prisms in certain binoculars, the amici roof prisms used in certain types of periscopes, and the roof prisms used in certain types of single lens reflex cameras. However, such devices are massive and bulky.

The present invention affords an improved thin, flexible film made of a transparent material having a structured surface on one side which will achieve total internal reflection so that light, incident within certain angular ranges, is totally internally reflected. In addition, since the improved film requires no coating, it is capable of maintaining its efficiency over long periods of time. Finally, because of the film's flexibility, it can be formed into a variety of shapes and utilized in several ways.

Disclosure of the Invention

The present invention provides a novel thin, flexible film made of a suitable transparent material, which has a structured surface on one side and a smooth surface opposite the structured surface on the other side. The structured surface consists of a linear array of miniature substantially right angled isosceles prisms arranged side-by-side to form a plurality of peaks and grooves. When the film is in a planar position, the perpendicular sides of each prism make an angle of approximately 45° with the smooth surface opposite the structured surface. In addition, when the film is curled or arched, the smooth surface lies in a smooth continuous arcuate curve and incident light striking the concave side of the film, within certain angular ranges, is totally internally reflected.

The ability to maintain reflectivity when the smooth surface lies in an arcuate curve results in the film being able to be utilized in a variety of ways. For example, the flexibility of the film allows it to be used as a concentrator of solar energy when applied onto a trough.

A particular advantage of the film's flexibility is that it can be formed into a conduit or optical tunnel having a variety of cross-sectional shapes with the linear array of right angled isosceles prisms disposed parallel, orthogonally, or at any angle to the axis of the conduit. However, light will only be totally internally reflected and transported along the conduit if it is properly directed into the conduit. Further, the performance of the conduit can be manipulated so that the conduit acts as an illuminator by permitting a controlled amount of light leakage.

Brief Description of the Drawings

The present invention will be more fully described with reference to the accompanying drawings wherein like reference numerals identify corresponding components, and:

Figures 1A and 1B are enlarged perspective views of the film of the present invention;

Figure 2 is a schematic end view of the film of the present invention;

Figure 3 is an inverted end view of Figure 2;

Figure 4 is an exaggerated view similar to Figure 2 depicting the film when it is curled into a smooth continuous arcuate curve;

Figure 5 is an exaggerated view similar to Figure 3 depicting the film when it is curled into a smooth continuous arcuate curve;

Figure 6 is a perspective view of a parabolic solar energy concentrating trough utilizing the film of the present invention;

Figure 7 is a perspective view of a light conduit utilizing the film of the present invention; and

Figure 8 is a schematic end view of the film of the present invention having rounded peaks to permit light leakage.

Detailed Description

Referring to Figures 1A and 1B of the drawings, the thin, flexible film of the present invention, generally designated 10, is comprised of a transparent polymeric material having a structured surface 12 on one side and a smooth surface 14 opposite the structured surface on the other side.

Incident light striking either of the surfaces 12 or 14, within certain angular ranges, will be totally internally reflected at the other surface, as illustrated in Figure 2. The light will be totally internally reflected when the light refracted by the first surface strikes the second surface at an angle, with respect to the normal, greater than the critical angle. This critical angle, in air, is defined as the arc sine of the reciprocal of the index of refraction of the material. In addition, a significant portion of the incident light striking either of the surfaces 12 or 14, outside those angular ranges, will be transmitted and the remainder will be reflected, as illustrated in Figure 3. In either situation, there is negligible absorption of light by the material.

The structured surface 12 includes a linear array of miniature substantially right angled isoceles prisms 16 arranged side-by-side in parallel relationship to form a plurality of peaks 17 and grooves 18 running the length of the film 10, as illustrated in Figures 2 and 3. The perpendicular sides 20 make an angle alpha (α), of approximately 45°, with the adjacent smooth surface 14 when the film is in a planar position. In addition, when the film 10 is curled such that the smooth surface 14 lies in a continuous arcuate curve, the angle alpha (α) varies from 45° and the sides 20 curve due to compression or tension, as illustrated in Figures 4 and 5. It has been found that these conditions do not significantly affect the performance of the film 10 in many applications.

The particular material used for the film 10 may vary, but it is intended that the material be normally flexible, and yet may not have sufficient strength to be self supporting in particular applications. The flexibility of the film 10 can best be defined as the ability to be curled so that the smooth surface 14 is a smooth continuous arcuate curve having no discernable discontinuities, such as kinks, fractures, segments, or the like. It is, however, essential that the material be transparent, and preferably homogeneous and isotropic. Useful polymeric materials for this purpose are commercially available, for example, acrylics and polycarbonates having nominal indices of refraction of 1.493 and 1.586, respectively. Other useful polymers are polypropylene, polyurethane, polystyrene, polyvinyl chloride and the like. The particular polymeric material selected is not significant to the invention hereof, so long as it provides the described function. Normally, the manufacturers of this product will select the best commercially available polymeric material based upon price, application and manufacturing process. However, polycarbonates are of particular interest because of their high indices of refraction and physical properties.

There are several ways to continuously mass produce the film of the present invention which are well known to those skilled in the art, for example as illustrated in U.S. Patent Nos. 3,689,346, 4,244,683, 4,576,850 and U.K. Patent Application No. GB2,127,344A, the disclosures of which are hereby incorporated by reference. In addition, previous methods for mass producing rigid sheets have also included compression molding, casting or calendering. The particular manufacturing process is not essential to the present invention, and is a matter of choice based upon economics and availability.

The thickness of the film is essential to the present invention because the performance and applicability of the film are dependent upon its flexibility so that the film 10 may be curled into a variety of shapes, such as tubular or cylindrical. An approximation for the minimum cylindrical diameter D to which a particular film having a thickness T, as measured from the smooth surface 14 to the valley of the grooves 18, may be curled is determined by the equation: $D = T * C$, where C is a constant associated with the modulus of elasticity of the particular material. When the prisms 16 are micro in size, at least 40 per 2.5 cm, and the film 10 has a particular thickness T, it may be curled such that the smooth surface 14 will lie in a smooth continuous arcuate curve while maintaining total internal reflection. It has been determined that an acrylic film having prisms micro in size has a constant C of about 200 associated therewith. For example, a 0.38 mm thick acrylic film having about 70 prisms per 2.5 cm will exhibit sufficient flexibility to be capable of being easily curled into a cylinder having a minimum diameter of approximately 7.6 cm, while maintaining a smooth continuous arcuate surface without breaking. In addition, such a film will be rigid and self-supporting enough to easily maintain its shape when curled into a cylinder having a diameter of approximately 45.7 cm. This ability to maintain reflectivity results in the film being able to be utilized in a variety of ways, and eliminates the prior requirement that the optically active surface be rigidly maintained in planar configuration as taught by U.S. Patent No. 4,260,220.

As illustrated in Figure 1A, a light ray A incident on the smooth surface 14, at an angle I_1 made with the normal N to the smooth surface 14, is refracted and totally internally reflected at the structured surface 12. The light ray A and the normal N both lie in a plane that is perpendicular to the direction P in which the linear array of prisms 16 of the structured surface 12 lie. Light ray A will be totally internally reflected and emerge as reflected light ray A' still lying In that same plane. Similarly, another light ray B, incident on the smooth surface 14 at an angle I_2 in a plane not perpendicular to the direction P, is illustrated. The incident light ray B is internally reflected and

emerges as light ray B' in another plane defined by the incoming light ray B and the prism direction P.

Application and Use

Several of the various applications and uses of the film 10 of the present invention will now be described. For example, the film 10 may be attached to a parabolic trough 30 made of a hard rigid material which supports the film 10 to form a concentrator of solar energy, as illustrated in Figure 6. Thus, solar energy S incident upon the smooth surface 14 is totally internally reflected and emerges focused on the linear target 32.

The most promising and revolutionary use of the film 10 is its ability to be formed into a tubular light conduit 40, whereby the smooth surface 14 lies in a smooth continuous arcuate curve, as illustrated in Figure 7. Further, as illustrated in Figures 4 and 5, the conduit 40 may be formed with the structured surface 14 on the inner concave surface or on the outer convex surface. Thus, light can be directed into the conduit 40, as illustrated in Figure 7, by a light source L-S, and a predetermined portion of the light, dependant upon the size and placement of the light source, will be contained by internal reflection and will emerge from the other end when the prisms 16 are disposed parallel to the axis of the conduit 40.

The performance of the conduit 40 may be manipulated by adding diffusing particles, or by incorporating windows or imperfections, such as non-optically smooth prism sides and/or non-optically sharp corners or peaks, so that the light conduit 40 acts as an illuminator by permitting controlled light leakage. To permit controlled light leakage, the peaks 17, which are normally razor sharp for light transportation, may be blunted or rounded as illustrated in Figure 8. The amount of light leakage per reflection is of the order r/ρ, where r is the approximate radius of the round peak 17' of the prisms 16' and ρ is the groove period. Thus, by varying the radius r of the peaks 17', light leakage can be controlled. It is preferred that this be accomplished without any post-production or conversion operation, which for example may require additional or specialized dies or tooling, or by varying parameters in the manufacturing process. This has proved both effective and economical by varying the following parameters to control replication and the rounding of the peaks: (1) die temperature; (2) die pressure; (3) line speed; (4) tooling temperature; (5) cooling rate; (6) polymer dopants, etc. If the manufacturing process is other than extrusion, other parameters may apply.

While a preferred embodiment of the present invention has been described so as to enable one skilled in the art to practice the techniques of the present invention, the preceding description is intended to be exemplary and should rot be used to limit the scope of the invention. The scope of the invention should be determined only by reference to the following claims.

Claims

1. A thin, flexible film formed of a transparent polymeric material, comprising a structured surface on one side and a smooth surface opposite said structured surface on the other side, said structured surface (12) including a linear array of miniature substantially right angled isosceles prisms (16) arranged side-by-side to form a plurality of peaks (17) and grooves (18), the perpendicular sides (20) of said prisms (16) make an angle of approximately 45° with said smooth surface (14) opposite said structured surface (12), characterized in that said film (10) has a thickness such that it may be curled so that said smooth surface (14) lies in a smooth continuous arcuate curve having a diameter of approximately 7.6 cm.

2. The film defined in claim 1, further characterized in that said isosceles prisms (16) are micro in size, at least 40 per 2.5 cm.

3. The film defined in claim 1, further characterized in that the film (10) does not have sufficient strength to be self-supporting.

4. The film defined in claim 1, further characterized in that said transparent polymeric material is polycarbonate.

5. The film defined in claim 1, further characterized in that said transparent polymeric material is acrylic.

6. The film defined in claim 1, further characterized in that said polymeric material has an index of refraction such that incident light striking the smooth surface (14) within certain angular ranges is totally internally reflected.

7. The film defined in claim 1, further characterized in that said polymeric material has an index of refraction such that incident light striking the structured surface (12) within certain angular ranges is totally internally reflected.

8. The film defined in claim 1, further characterized in that said film (10) has a thickness of approximately 0.38 mm and about 70 prisms

(16) per 2.5 cm so that when said film (10) is curled said smooth surface (14) lies in a smooth continuous arcuate curve without any discernable discontinuities.

9. The film defined in claim 1, further characterized in that said peaks (17 & 17') are rounded to permit controlled light leakage defined in accordance with the ratio r/ρ, where r is the approximate radius of the round peaks (17 & 17') and ρ is the groove period.

10. The film defined in claim 9, further characterized in that said transparent polymeric material further includes light diffusing particles.

11. A light conduit for transporting light, comprising a thin, flexible film of a transparent polymeric material including a structured surface on one side and a smooth surface opposite said structured surface on the other side, said structured surface (12) having a linear array of miniature substantially right angled isosceles prisms (16) arranged side-by-side to form a plurality of peaks (17) and grooves (18), the perpendicular sides (20) of said prisms (16) making an angle of approximately 45° with said smooth surface (14) opposite said structured surface (12), said film (10) being characterized in that said polymeric material is a thin flexible film and is formed into a tubular configuration so that said smooth surface (14) lies in a smooth continuous arcuate curve, the thickness of said film being such that said curve may have a diameter of approximately 7.6 cm, said polymeric material having an index of refraction such that light entering the conduit (40), within certain angular ranges, is totally internally reflected as it travels along the conduit (40).

12. The light conduit defined in claim 11, further characterized in that the corners of said prisms (16) of said structured surface (12) are not optically sharp, so that the light conduit (40) acts as an illuminator by allowing some of the light entering said conduit (40) to escape through the film (10) without being totally internally reflected.

13. The light conduit defined in claim 11, further characterized in that the perpendicular sides (20) of said prisms (16) of said structured surface (12) are not optically smooth, so that the light conduit (40) acts as an illuminator by allowing some of the light entering said conduit to escape through the film (10) without being totally internally reflected.

14. The light conduit defined in claim 11, further characterized in that said peaks (17 & 17') are rounded to permit controlled light leakage defined in accordance with the ratio r/ρ, where r is the approximate radius of the round peaks (17 & 17') and ρ is the groove period.

15. The light conduit defined in claim 11, further characterized in that said transparent polymeric material further includes light diffusing particles.

Patentansprüche

1. Dünne, flexible Feinfolie aus einem durchsichtinen polymeren Werkstoff, mit einer strukturierten Fläche auf der einen Seite und einer der strukturierten Fläche entgegengesetzten, glatten Fläche auf der anderen Seite, wobei die strukturierte Fläche (12) eine lineare Anordnung von im wesentlichen rechtwinkligen gleichschenkligen Miniaturprismen (16) aufweist, die nebeneinander angeordnet sind und eine Mehrzahl von Höckern (17) und Tälern (18) bilden und die zueinander rechtwinkligen Seiten (20) der Prismen (16) unter einem Winkel von etwa 45° zu der der strukturierten Fläche (12) entgegengesetzten, glatten Fläche (14) angeordnet sind, dadurch gekennzeichnet, daß die Feinfolie (10) eine solche Dicke hat, daß sie so eingerollt werden kann, daß die glatte Fläche (14) in einer glatten, kontinuierlichen, bogenförmigen Kurve mit einem Durchmesser von etwa 7,6 cm liegt.

2. Feinfolie nach Anspruch 1, dadurch gekennzeichnet, daß die gleichschenkligen Prismen (16) eine Mikrogröße haben und in einer Teilung von mindestens 40 pro 2,5 cm vorhanden sind.

3. Feinfolie nach Anspruch 1, dadurch gekennzeichnet, daß die Feinfolie (10) nicht so fest ist, daß sie freitragend wäre.

4. Feinfolie nach Anspruch 1, dadurch gekennzeichnet, daß der durchsichtige polymere Werkstoff Polycarbonat ist.

5. Feinfolie nach Anspruch 1, dadurch gekennzeichnet, daß der durchsichtige polymere Werkstoff Acrylharz ist.

6. Feinfolie nach Anspruch 1, dadurch gekennzeichnet, daß der polymere Werkstoff eine solche Brechzahl hat, daß in bestimmten Winkelbereichen auf die glatte Fläche (14) fallendes Licht vollständig innen reflektiert wird.

7. Feinfolie nach Anspruch 2, dadurch gekennzeichnet, daß der polymere Werkstoff eine solche Brechzahl hat, daß in bestimmten Winkelbereichen auf die strukturierte Fläche (12) fallendes Licht vollständig innen reflektiert wird.

8. Feinfolie nach Anspruch 1, dadurch gekennzeichnet, daß die Feinfolie (10) eine Dicke von etwa 0,38 mm hat und etwa 70 Prismen (16) pro 2,5 cm besitzt, so daß beim Einrollen der Feinfolie (10) die glatte Fläche (14) ohne erkennbare Unstetigkeiten in einer glatten, kontinuierlichen bogenförmigen Kurve lient.

9. Feinfolie nach Anspruch 9,dadurch gekennzeichnet, daß die Höcker (17 & 17') so gerundet sind, daß sie einen gesteuerten Lichtdurchtritt entsprechend dem Verhältnis r/ρ gestatten, wobei r der ungefähre Radius der runden Hökker (17 & 17') und ρ die Periode der Vertiefungen ist.

10. Feinfolie nach Anspruch 9, dadurch gekennzeichnet, daß der durchsichtige polymere Werkstoff lichtdiffundierende Teilchen enthält.

11. Lichtleitung zum Transport von Licht mit einer dünnen, flexiblen Feinfoile aus einem durchsichtigen polymeren Werkstoff, mit einer strukturierten Fläche auf der einen Seite und einer der strukturierten Fläche entgegengesetzten, glatten Fläche auf der anderen Seite, wobei die strukturierte Fläche (12) eine lineare Anordnung von im wesentlichen rechtwinkligen gleichschenkligen Miniaturprismen (16) aufweist, die nebeneinander angeordnet sind und eine Mehrzahl von Höckern (17) und Tälern (18) bilden und die zueinander rechtwinkligen Seiten (20) der Prismen (16) unter einem Winkel von etwa 45° zu der der strukturierten Fläche (12) entgegengesetzten, glatten Fläche (14) angeordnet sind, und die Folie (10) dadurch gekennzeichnet, ist, daß der polymere Werkstoff eine dünne, flexible Feinfolie bildet und zu einem Rohr verformt ist, so daß die glatte Fläche (14) in einer glatten, kontinuierlichen, bogenförmigen Kurve liegt, die Feinfolie (10) eine solche Dicke hat, daß sie so eingerollt werden kann, daß die glatte Fläche (14) in einer glatten, kontinuierlichen, bogenförmigen Kurve mit einem Durchmesser von etwa 7,6 cm liegt und der polymere Werkstoff eine solche Brechzahl hat, daß in die Leitung (40) eintretendes Licht bei seiner Wanderung längs der Leitung (40) in bestimmten Winkelbereichen vollständig innenreflektiert wird.

12. Lichtleitung nach Anspruch 11, dadurch gekennzeichnet, daß die Kanten der Prismen (16) der strukturierten Fläche (12) nicht optisch scharf sind, so daß die Lichtleitung (40) als ein Leuchtkörper wirksam ist, weil sie einem Teil des in die Leitung (40) eintretenden Licht gestattet, durch die Feinfolie (10) auszutreten, ohne daß es vollständig innenreflektiert wird.

13. Lichtleitung nach Anspruch 11, dadurch gekennzeichnet, daß die zueinander rechtwinkligen Seiten (20) der Prismen (16) der strukturierten Fläche (12) nicht optisch glatt sind, so daß die Lichtleitung (40) als ein Leuchtkörper wirksam ist, weil sie einem Teil des in die Leitung (40) eintretenden Licht gestattet, durch die Feinfolie (10) auszutreten, ohne daß es vollständig innenreflektiert wird.

14. Lichtleitung nach Anspruch 11, dadurch gekennzeichnet, daß die Höcker (17 & 17') so gerundet sind, daß sie einen gesteuerten Lichtaustritt entsprechend dem Verhältnis r/ρ gestatten, wobei r der ungefähre Radius der runden Höcker (17 & 17') und ρ die Periode der Vertiefungen ist.

15. Lichtleitung nach Anspruch 11, dadurch gekennzeichnet, daß der durchsichtige polymere Werkstoff lichtdiffundierende Teilchen enthält.

Revendications

1. Film flexible mince en polymère transparent, présentant une surface structurée sur une face et une surface lisse opposée à ladite surface structurée, sur l'autre face, ladite surface structurée (12) comportant une série linéaire de très petits prismes isocèles sensiblement à angle rectangle au sommet (16), agencés côte à côte pour former une pluralité de crêtes (17) et de gorges (18),les côtés perpendiculaires (20) des dits prismes (16) formant un angle de 45° environ avec ladite surface lisse (14) opposée à ladite surface structurée (12),caractérisé en ce que ledit film (10) a une épaisseur telle qu'il peut être courbé de sorte que ladite surface lisse (14) suive une courbe arquée continue régulière ayant un diamètre de 7,6 cm environ.

2. Film suivant la revendication 1, caractérisé en outre en ce que lesdits prismes isocèles (16) sont de très petite dimension, au nombre d'au moins 40 par 2,5 cm.

3. Film suivant la revendication 1, caractérisé en outre en ce que le film (10) n'a pas une résistance mécanique suffisante pour être

auto-porteur.

4. Film suivant la revendication 1, caractérisé en outre en ce que ledit polymère transparent est un polycarbonate.

5. Film suivant la revendication 1, caractérisé en outre en ce que ledit polymère transparent est une résine acrylique.

6. Film suivant la revendication 1, caractérisé en outre en ce que ledit polymère a un indice de réfraction tel que la lumière incidente qui frappe la surface lisse (14) à l'intérieur de certaines plages angulaires est totalement réfléchie intérieurement.

7. Film suivant la revendication 1, caractérisé en outre en ce que ledit polymère a un indice de réfraction tel que la lumière incidente qui frappe la surface structurée (12) à l'intérieur de certaines plages angulaires est totalement réfléchie intérieurement .

8. Film suivant la revendication 1, caractérisé en outre en ce que ledit film (10) a une épaisseur de 0,38 mm environ et comporte environ 70 prismes (16) par 2,5 cm de sorte que, lorsque ledit film (10) est enroulé, ladite surface lisse (14) suit une courbe arquée continue régulière sans discontinuités discernables.

9. Film suivant la revendication 1, caractérisé en outre en ce que lesdites crêtes (17 et 17') sont arrondies pour permettre une fuite réglée de lumière, définie en fonction du rapport r/ρ , où r est le rayon appraximatif des crêtes arrondies (17 et 17') et ρ est la période des gorges.

10. Film suivant la revendication 9, caractérisé en outre en ce que ledit polymère transparent comprend en outre des particules de diffusion de la lumière.

11. Conduit de lumière pour transporter une lumière, comprenant un film flexible mince d'un polymère transparent qui présente une surface structurée, sur une face, et une surface lisse opposée à ladite surface structurée sur l'autre face, ladite surface structurée (12) comportant une série linéaire de très petits prismes isocèles sensiblement à angle droit (16) agencés côte à côte pour former une pluralité de crêtes (17) et de gorges (18), les côtés perpendiculaires (20) desdits prismes (16) faisant un angle de 45° environ avec la dite surface lisse (14) opposée à ladite surface structurée (12), ledit film (10) étant caractérisé en ce que ledit polymère est un film flexible mince et il est transformé en une configuration tubulaire telle que ladite surface lisse (14) suit une courbe arquée continue régulière, l'épaisseur dudit film étant telle que ladite courbe peut avoir un diamètre de 7,6 cm environ, ledit polymère ayant un indice de réfraction tel que la lumière,qui entre dans le conduit (40) à l'intérieur de certaines plages angulaires, est totalement réfléchie intérieurement pendant son déplacement le long du conduit (40).

12. Conduit de lumière suivant la revendication 11, caractérisé en outre en ce que les angles des dits prismes (16) de ladite surface structurée (12) ne sont pas optiquement vifs, de sorte que le conduit de lumière (40) agit comme un illuminateur en permettant à une partie de la lumière qui entre dans ledit conduit (40) de s'échapper à travers le film (10) sans être totalement réfléchie intérieurement.

13. Conduit de lumière suivant la revendication 11, caractérisé en ce que les côtés perpendiculaires (20) desdits prismes (16) de ladite surface structurée (12) ne sont pas optiquement lisses, de sorte que le conduit de lumière (40) agit comme un illuminateur en permettant à une partie de la lumière qui entre dans ledit conduit de s'échapper à travers le film (10) sans être totalement réfléchie intérieurement.

14. Conduit de lumière suivant la revendication 11, caractérisé en outre en ce que lesdites crêtes (17 et 17') sont arrondies pour permettre une fuite de lumière réglée, définie en fonction du rapport r/ρ , où r est le rayon approximatif des crêtes arrondies (17 et 17') et ρ est la période des gorges.

15. Conduit de lumière suivant la revendication 11, caractérisé en outre en ce que ledit polymère transparent contient en outre des particules de diffusion de la lumière.

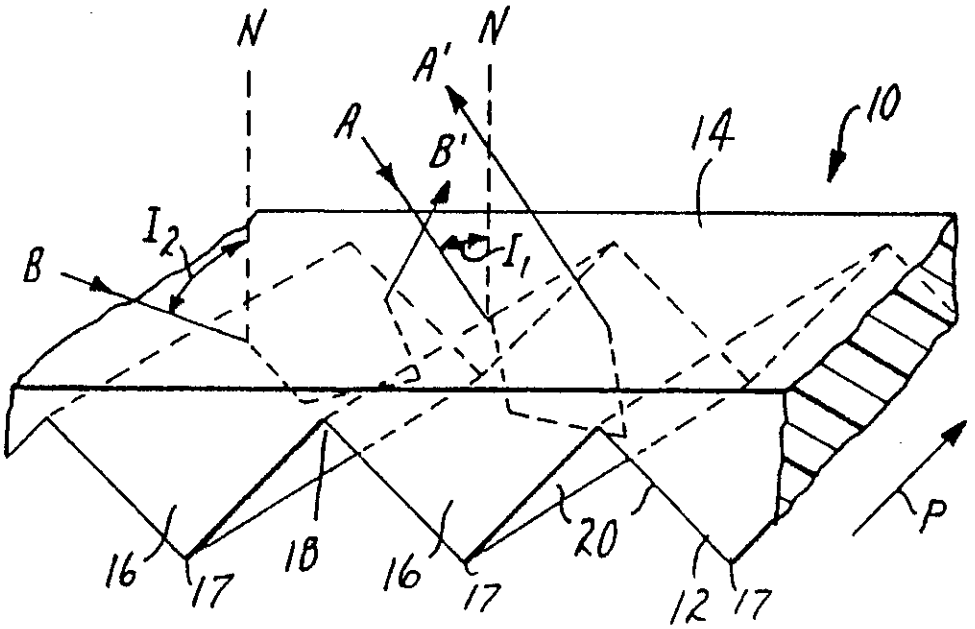

FIG.1A

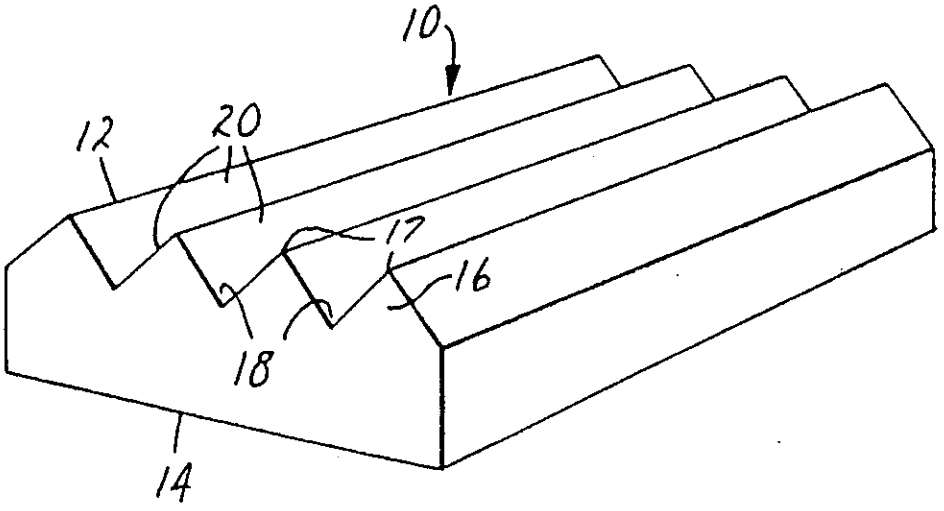

FIG.1B

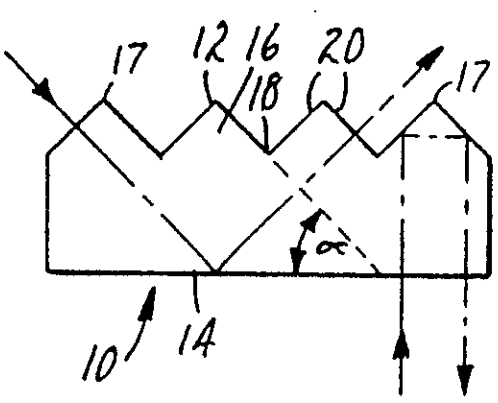

FIG. 2

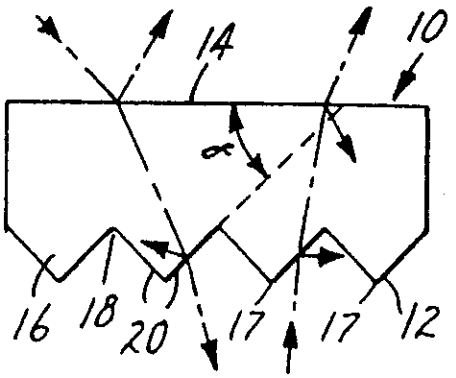

FIG. 3

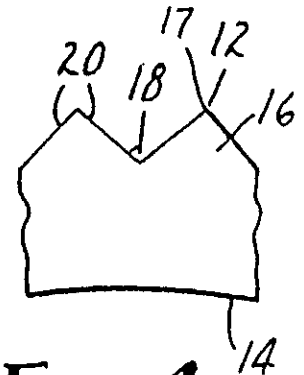

FIG. 4

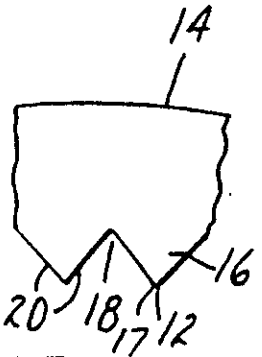

FIG. 5

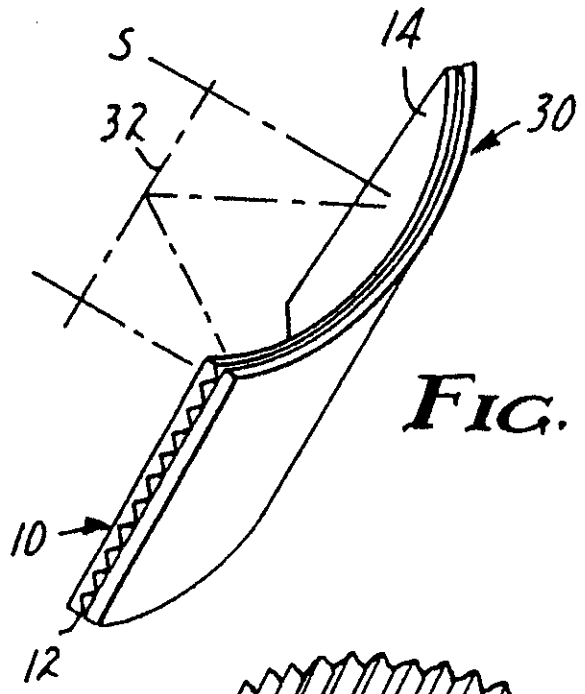

FIG. 6

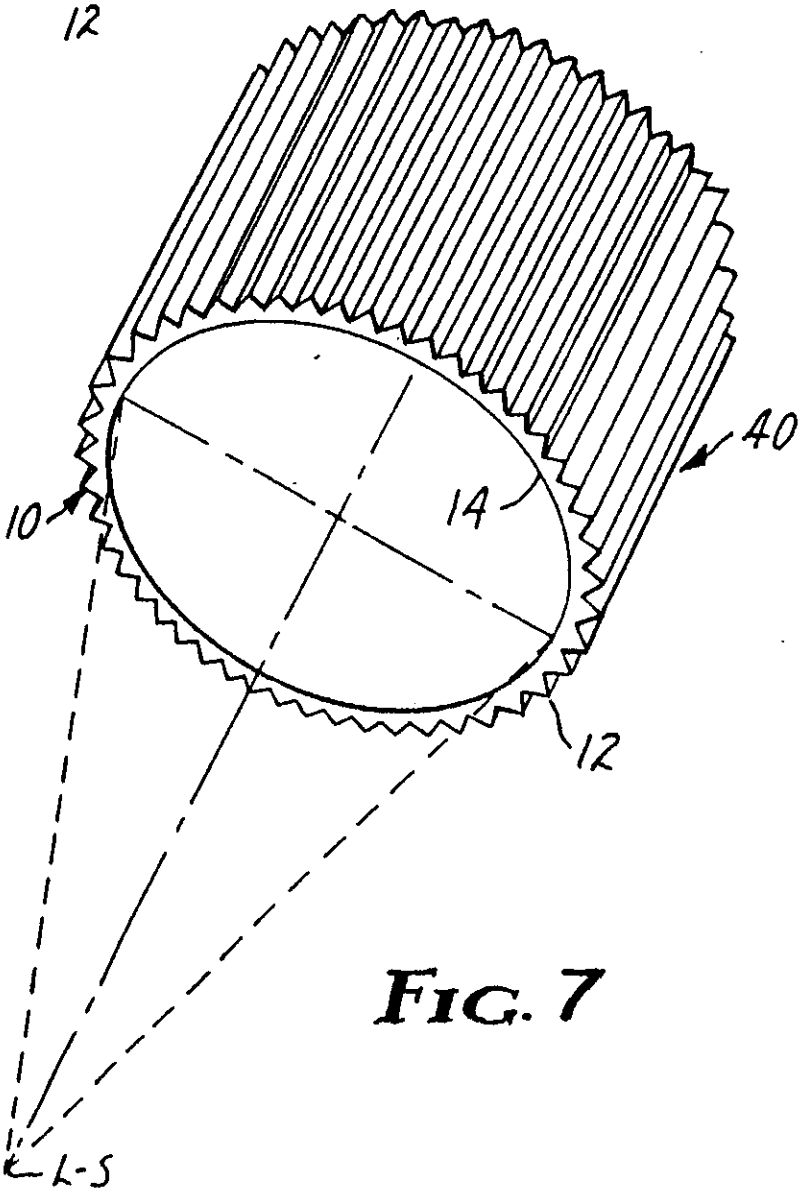

FIG. 7

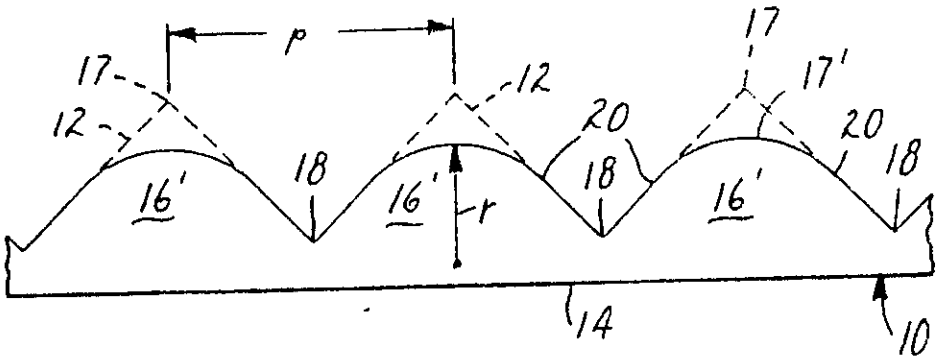

FIG.8

REGISTER ENTRY FOR EP0225123

European Application No EP86309049.4 filing date 19.11.1986

Priority claimed:
21.11.1985 in United States of America - doc: 799869

Designated States DE FR GB IT NL SE

Title A TOTALLY INTERNALLY REFLECTING THIN, FLEXIBLE FILM

Applicant/Proprietor
MINNESOTA MINING AND MANUFACTURING COMPANY, 3M Center, P.O. Box 33427, St. Paul, Minnesota 55133-3427, United States of America [ADP No. 50012772006]

Inventor
SANFORD COBB JR., c/o Minnesota Mining and Manufacturing Co.,2501 Hudson Road P.O. Box 33427, St. Paul Minnesota 55133-3427, United States of America [ADP No. 54868336001]

Classified to
G2J U1S
G02B

Address for Service
LANGNER PARRY, High Holborn House, 52-54 High Holborn, LONDON, WC1V 6RR, United Kingdom [ADP No. 00001032001]

EPO Representative
IAIN CAMERON BAILLIE, c/o Ladas & Parry Isartorplatz 5, D-8000 München 2, Federal Republic of Germany [ADP No. 50848357001]

Publication No EP0225123 dated 10.06.1987
Publication in English

Examination requested 19.11.1986

Patent Granted with effect from 24.03.1993 (Section 25(1)) with title A TOTALLY INTERNALLY REFLECTING THIN, FLEXIBLE FILM.

26.06.1989 EPO: Search report published on 19.07.1989
Entry Type 25.11 Staff ID. Auth ID. EPT

22.02.1993 Notification from EPO of change of Applicant/Proprietor details
from
MINNESOTA MINING AND MANUFACTURING COMPANY, 3M Center, P.O. Box 33427, St. Paul, Minnesota 55133-3427, United States of America [ADP No. 50012772006]

to
MINNESOTA MINING AND MANUFACTURING COMPANY, 3M Center, P.O. Box 33427, St. Paul, Minnesota 55133-3427, United States of America [ADP No. 50012772006]
Entry Type 25.14 Staff ID. RD06 Auth ID. EPT

22.02.1993 Notification from EPO of change of EPO Representative details from
IAIN CAMERON BAILLIE, c/o Ladas & Parry Isartorplatz 5, D-8000
München 2, Federal Republic of Germany [ADP No. 50848357001]
to
IAIN CAMERON BAILLIE, c/o Ladas & Parry, Altheimer Eck 2, W-8000
München 2, Federal Republic of Germany [ADP No. 50848357001]
Entry Type 25.14 Staff ID. RD06 Auth ID. EPT

10.03.1993 LANGNER PARRY, High Holborn House, 52-54 High Holborn, LONDON, WC1V
6RR, United Kingdom [ADP No. 00001032001]
registered as address for service
Entry Type 8.11 Staff ID. SW2 Auth ID. AA

**** END OF REGISTER ENTRY ****

RENEWAL DETAILS

PUBLICATION NUMBER EP0225123

PROPRIETOR(S)

MINNESOTA MINING AND MANUFACTURING COMPANY, 3M Center, P.O. Box 33427, St. Paul, Minnesota 55133-3427, United States of America

DATE FILED	19.11.1986
DATE GRANTED	24.03.1993
DATE NEXT RENEWAL DUE	19.11.1994
DATE NOT IN FORCE	
DATE OF LAST RENEWAL	28.10.1993
YEAR OF LAST RENEWAL	08
STATUS	PATENT IN FORCE