R. MACGREGOR.
HYDRAULIC MOTOR.
APPLICATION FILED MAY 1, 1912.

1,068,790.

Patented July 29, 1913.

3 SHEETS—SHEET 1.

Fig. 1.

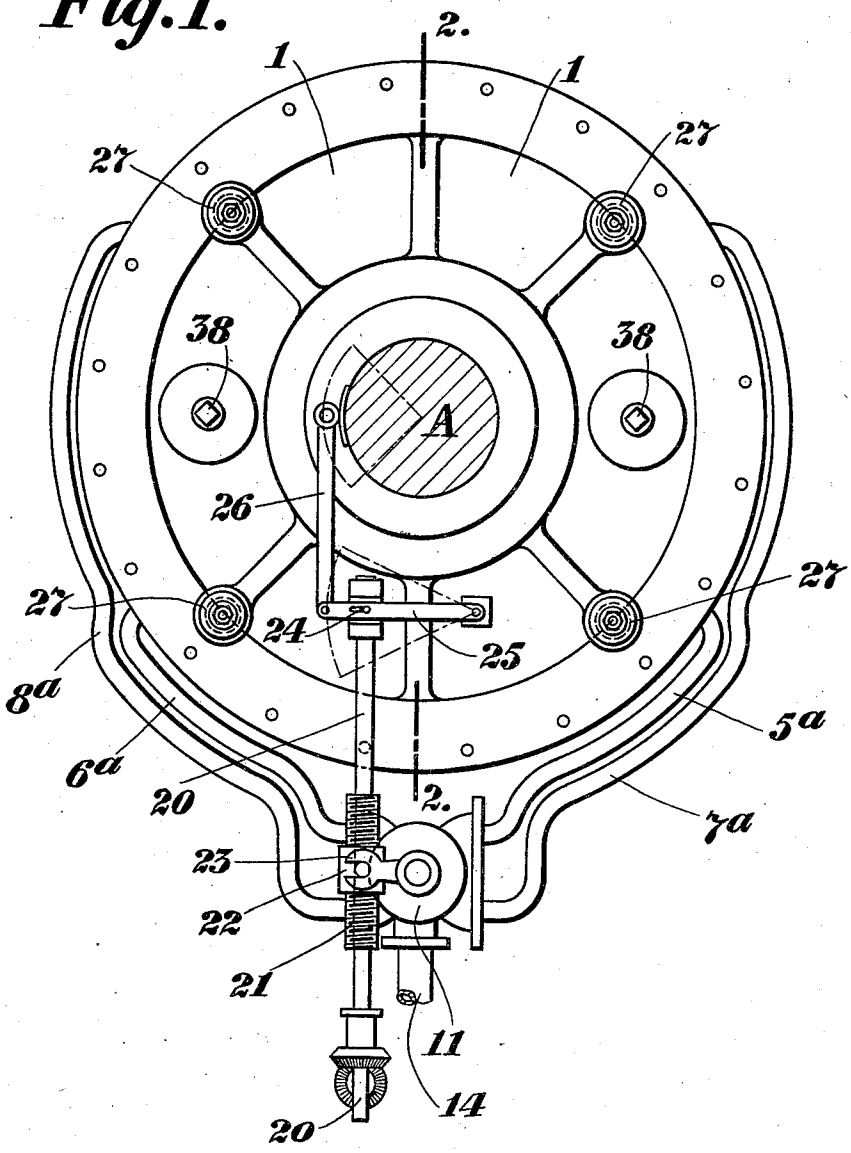

Witnesses:
P. F. Nagel.
H. G. Dieterich

Inventor:
Robert Macgregor.
By Wiedersheim & Fairbanks
Attorneys.

COLUMBIA PLANOGRAPH CO., WASHINGTON, D. C.

R. MACGREGOR.

HYDRAULIC MOTOR.

APPLICATION FILED MAY 1, 1912.

1,068,790.

Patented July 29, 1913.

3 SHEETS—SHEET 2.

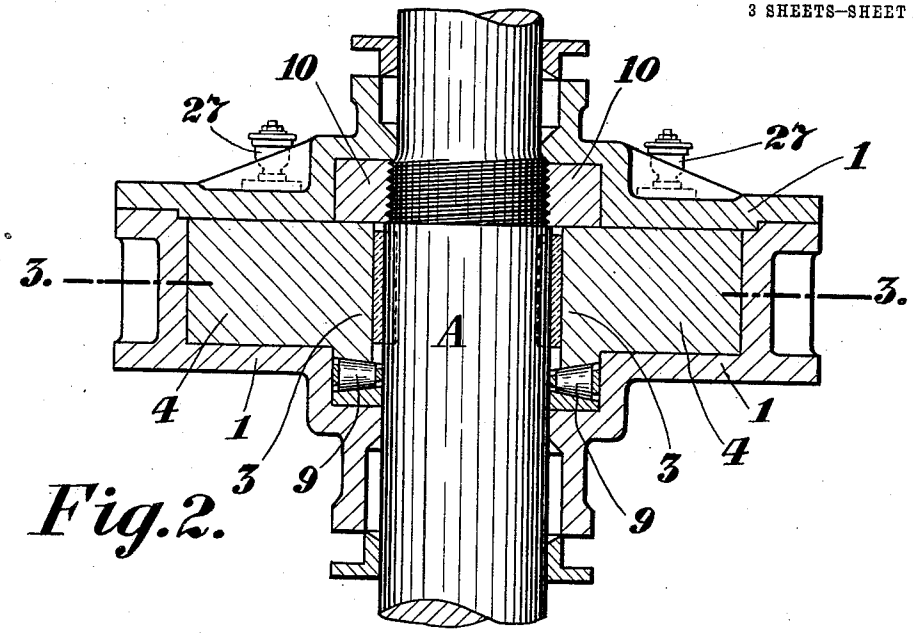

Fig. 2.

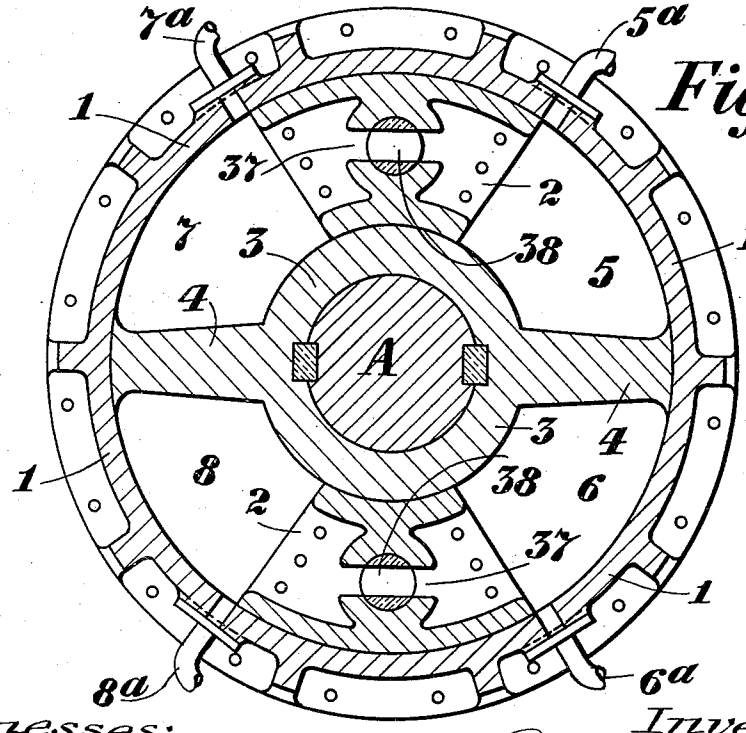

Fig. 3.

Witnesses:

P. F. Nagel.

H. G. Dieterich

By

Inventor:

Robert Macgregor,

Wiedersheim & Fairbanks

Attorneys.

COLUMBIA PLANOGRAPH CO., WASHINGTON, D. C.

R. MACGREGOR.

HYDRAULIC MOTOR.

APPLICATION FILED MAY 1, 1912.

1,068,790.

Patented July 29, 1913.

3 SHEETS—SHEET 3.

Fig. 4.

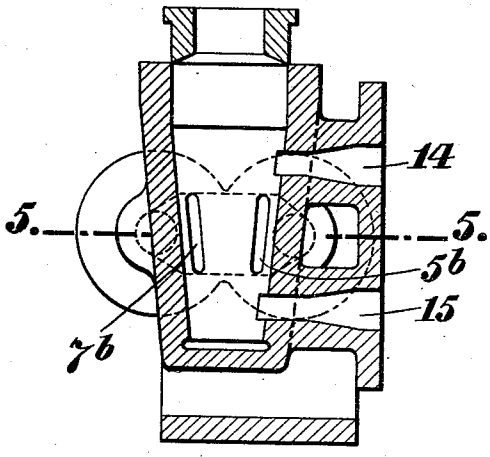

Fig. 6.

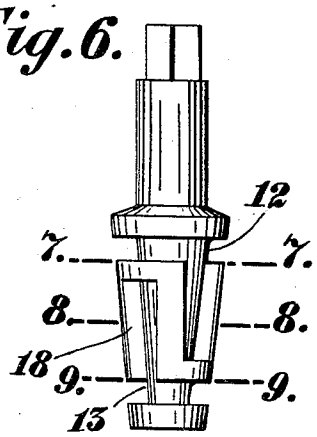

Fig. 7.

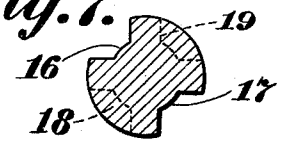

Fig. 8.

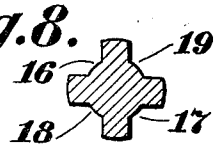

Fig. 9.

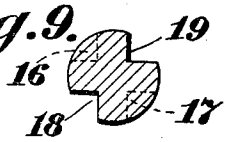

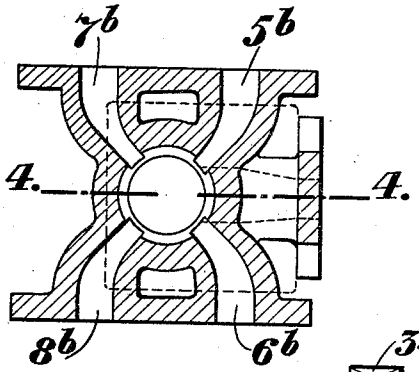

Fig. 5.

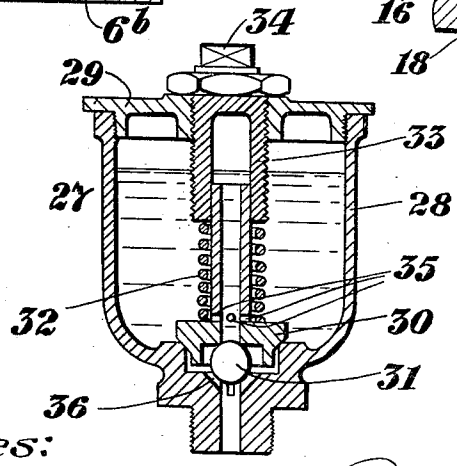

Fig. 10.

Witnesses:

P. F. Nagle.

H. G. Dieterich

Inventor

Robert Macgregor,

By Wiedersheim & Fairbairn

Attorneys

COLUMBIA PLANOGRAPH CO., WASHINGTON, D. C.

UNITED STATES PATENT OFFICE.

ROBERT MACGREGOR, OF LANGBANK, SCOTLAND.

HYDRAULIC MOTOR.

1,068,790. Specification of Letters Patent. Patented July 29, 1913.

Application filed May 1, 1912. Serial No. 694,430.

To all whom it may concern:

Be it known that I, ROBERT MACGREGOR, a subject of the King of Great Britain, residing at Langbank, Renfrewshire, Scotland, have invented a certain new and useful Hydraulic Motor, of which the following is a specification.

This invention relates to an hydraulic motor which is adapted to rock, oscillate, or turn a shaft or other body.

The motor can be applied to many purposes. The motor also serves as a bearing for the shaft or body which is being rocked or moved. The motor may be arranged to operate shafts or bodies arranged either vertically or horizontally.

On the drawings annexed I have shown, by way of example, one construction of the motor which is adapted to rock or turn a vertical shaft or other body A through an arc of a circle.

On the drawings:—Figure 1 is a plan of the motor. Fig. 2 is a cross section on the line 2, 2, Fig. 1. Fig. 3 is a sectional plan on the line 3, 3, Fig. 2. Fig. 4 is a sectional elevation of the barrel of the controlling cock on line 4, 4, Fig. 5. Fig. 5 is a section on line 5, 5, Fig. 4. Fig. 6 is an elevation of the plug of the controlling cock. Fig. 7 is a section on line 7, 7, Fig. 6. Fig. 8 is a section on line 8, 8, Fig. 6. Fig. 9 is a section on line 9, 9, Fig. 6. Fig. 10 is a sectional elevation of the automatic supply and relief valve.

The motor comprises a cylindrical casing 1 having stuffing boxes at top and bottom thereof through which the shaft A passes. The casing is fitted, at opposite sides, with V shaped radial blocks 2 which extend from the inner periphery inward to a boss 3 keyed to the shaft A and carrying two arms or vanes 4. The casing is divided into two equal and angular compartments by means of the radial blocks and each of these compartments is again divided by the vanes or arms, so that four compartments 5, 6, 7, and 8 are formed. The vanes or arms work with a neat fit, top, bottom, and circumferentially. One end of the boss 3 bears against a roller bearing 9 and the other end has a thrust collar 10 which may be screwed on and keyed to the shaft A.

The compartments 5, 6, 7, and 8 communicate with a controlling cock 11 by means of pipes 5^a, 6^a, 7^a and 8^a. The plug of the controlling cock has a supply channel 12 and exhaust channel 13 in constant communication with branches 14 and 15 respectively of the cock and through which liquid under pressure is supplied to and exhausted from the compartments of the casing 1. The liquid is admitted to compartments 5 and 8 and exhausted from compartments 6 and 7 and vice-versa by means of ports 16, 17, 18, and 19, the ports 16 and 17 being in permanent communication with the channel 12 and the ports 18 and 19 being in permanent communication with the channel 13. When the plug is in mid-position the metal strips (of a zig-zag formation) separating the ports therein cover the ports 5^b 6^b, 7^b and 8^b in the controlling cock 11 thereby cutting off the liquid supply from all the compartments, when the plug is turned in one direction the supply ports 16 and 17 in the plug are put into communication with the ports 6^b and 7^b in the casing of the cock and the exhaust ports 18 and 19 are put in communication with the ports 5^b and 8^b thus moving the shaft A in a contra-clockwise direction and when the plug is turned in the opposite direction the reverse is the case and the shaft is moved in a clockwise direction.

The controlling cock 11 may be operated from any suitable position by means of controlling shafting 20, telemotor, or other suitable means. The controlling shaft 20 turns a screw 21 in a nut 22 causing said nut to move longitudinally along the screw thus turning the plug of the controlling cock by means of a forked lever 23. The controlling shaft 20, suitably near the shaft A, has a rotatable sleeve thereon having a pin 24 projecting therefrom, said pin engaging a slot in a lever 25 one end of which is fulcrumed to the casing 1 the other end being pivoted to one end of a link 26, the other end of which is pivotally attached to the shaft A, so that, as the said shaft A moves, the controlling shaft 20 is actuated by the aforedescribed mechanism and moves longitudinally thus moving the nut 22 and lever 23 and "hunting" (*i. e.* moving) the plug of the controlling cock 11 back again to its mid position.

To insure the compartments 5, 6, 7, and 8, being kept constantly full of liquid and to relieve any undue pressure therein a combined supply-relief valve 27 is fitted to communicate with each. This valve (Fig. 10)

comprises a cylindrical casing 28, cover 29, spring-controlled valve 30 and float valve 31. The valve 30 is held upon its seating by a spring 32, said spring being capable of adjustment from outside the casing by turning the screwed sleeve 33 by means of the square shank 34. The float valve 31 is held against its upper seating by the liquid pressure from the compartment beneath. When the pressure in any compartment becomes excessive the valve 30 is lifted against the pressure of the spring 32 and liquid flows into the casing 28 until the spring 32 again overcomes the liquid pressure and forces the valve 30 on to its seating again.

Should the volume of liquid in any compartment fall below that necessary to keep the compartment full the float valve 31 drops and liquid flows from the casing 28 through holes 35 and passages 36 into the compartment beneath until the same is completely full again.

The radial blocks 2 may be fitted with passages 37 leading therethrough and communicating with the chambers in the casing so that space 5 may be put into communication with space 7 and space 6 with space 8, the flow of liquid through the passages 37 being controlled by cocks 38. By opening the cocks 38 the radial arms 4 can rotate freely in the casing 1.

With this machine, by moving the cock 11 the water under pressure can be supplied, as desired, simultaneously to the compartments 5 and 8 or 6 and 7 thereby acting on the vanes 4, 4, from opposite sides thereof and turning the shaft A through an arc of a circle. The cocks 38 would be normally closed but, when desired, these may be opened when the liquid will act on both sides of the vanes 4, 4, simultaneously and the shaft A held locked in position. The shaft having diametrically opposite arms 4, 4, the pressure acts thereon on opposite sides thereof both equally and simultaneously so that the shaft is not subjected to sudden jars or unbalanced strains tending to displace the shaft or make it wear unequally. Moreover, as liquid always fills the compartments the shaft is always held against play or vibration.

The motor is specially adapted for use as a steering engine on board ship.

Having now fully described my invention what I claim and desire to secure by Letters Patent is:—

1. An hydraulic motor, comprising, in combination, a cylindrical casing, means for dividing the casing into compartments, channels through said dividing means, externally operable means for opening or closing said channels and connecting or disconnecting said compartments stuffing boxes through which the body to be moved passes, arms on the body one adapted to work in each compartment means for supplying fluid to and exhausting it from the compartments and means for opening and closing communication between said compartments.

2. An hydraulic motor, comprising, in combination, a cylindrical casing, means for dividing the casing into compartments, stuffing boxes through which the body to be moved passes, arms on the body one adapted to work in each compartment and a controlling cock with plug having a zigzag raised portion thereon and channels communicating with the depressions between said raised portion for supplying fluid to and exhausting it from the compartments.

3. An hydraulic motor, comprising, in combination, a cylindrical casing, means for dividing the casing into compartments, stuffing boxes through which the body to be moved passes, arms on the body one adapted to work in each compartment and a controlling cock with plug having a zig-zag raised portion thereon and two annular channels communicating with the depressions between said raised portions for supplying fluid to and exhausting it from the compartments.

4. An hydraulic motor, comprising, in combination, a cylindrical casing, means for dividing the casing into compartments, stuffing boxes through which the body to be moved passes, arms on the body one adapted to work in each compartment and a cock with a plug having two annular grooves thereon and depressions alternately communicating with the said grooves, means for supplying fluid to and exhausting it from the compartments.

5. An hydraulic motor, comprising, in combination, a cylindrical casing, means for dividing the casing into compartments, stuffing boxes through which the body to be moved passes, arms on the body one adapted to work in each compartment and a cock with a barrel having a supply passage and an exhaust passage and also four supply and exhaust passages leading to the compartments of the cylindrical casing, and a plug made with two annular passages therein which are in constant communication the one with the said supply passage and the other with said exhaust passage of the barrel and with vertical passages therein in alternate communication with said annular passages and adapted to communicate with the said supply and exhaust passages of the barrel.

6. An hydraulic motor, comprising, in combination, a cylindrical casing, means for dividing the casing into compartments, stuffing boxes through which the body to be moved passes, arms on the body one adapted to work in each compartment and means for supplying fluid to and exhausting it from the compartments and means for automati-

cally supplying additional fluid to the compartments or of relieving the fluid pressure in the compartments.

7. An hydraulic motor, comprising, in combination, a cylindrical casing, means for dividing the casing into compartments, stuffing boxes through which the body to be moved passes, arms on the body one adapted to work in each compartment and means for supplying fluid to and exhausting it from the compartments and valve means for automatically supplying additional fluid to the compartments or of relieving the fluid pressure in the compartments.

8. An hydraulic motor, comprising in combination, a cylindrical casing, means for dividing the casing into compartments, stuffing boxes, a shaft passing through said stuffing boxes, arms on the shaft one adapted to work in each compartment, a controlling cock for supplying fluid to and exhausting it from the compartments, a lever adapted to open or close said cock, a nut attached to said lever, a link pivotally mounted on said shaft, a second lever pivotally secured to both said link and casing and a second shaft rotatably mounted on said second lever and having a screwed part engaging said nut.

In testimony whereof I affix my signature in presence of two witnesses.

ROBT. MACGREGOR.

Witnesses:
H. D. FITZPATRICK,
WILLIAM CARRUTHERS.

Copies of this patent may be obtained for five cents each, by addressing the "Commissioner of Patents, Washington, D. C."