(12) UK Patent Application (19) GB (11) 2 072 007 A

(21) Application No **8103913**
(22) Date of filing **9 Feb 1981**
(30) Priority data
(31) **80/05065**
(32) **14 Feb 1980**
(33) **United Kingdom (GB)**
(43) Application published **30 Sep 1981**
(51) **INT CL³ A47G 9/02**
(52) Domestic classification **A4S** 11
(56) Documents cited
**GB 1338622**
**GB 1266559**
**GB 1093969**
**GB 929706**
**GB 821966**
**GB 753220**
**GB 546107**
**GB 495482**
**GB 388685**
**GB 109761**
(58) Field of search **A4S**

(71) Applicants
**Eli Bourmad trading as Elibee Manufacturers, 4A Mayo Street, Off Fairfield Street, Ardwick, Manchester.**
(72) Inventors
**Eli Bourmad**
(74) Agents
**Wilson Gunn & Ellis, 41 Royal Exchange, Manchester M2 7DB.**

# (54) Bedclothing

(57) According to this invention a blanket comprises an under layer (10) adapted to be secured to a bed mattress (16) and an over layer (18) permanently joined at one end thereof to a corresponding one end of the under layer.

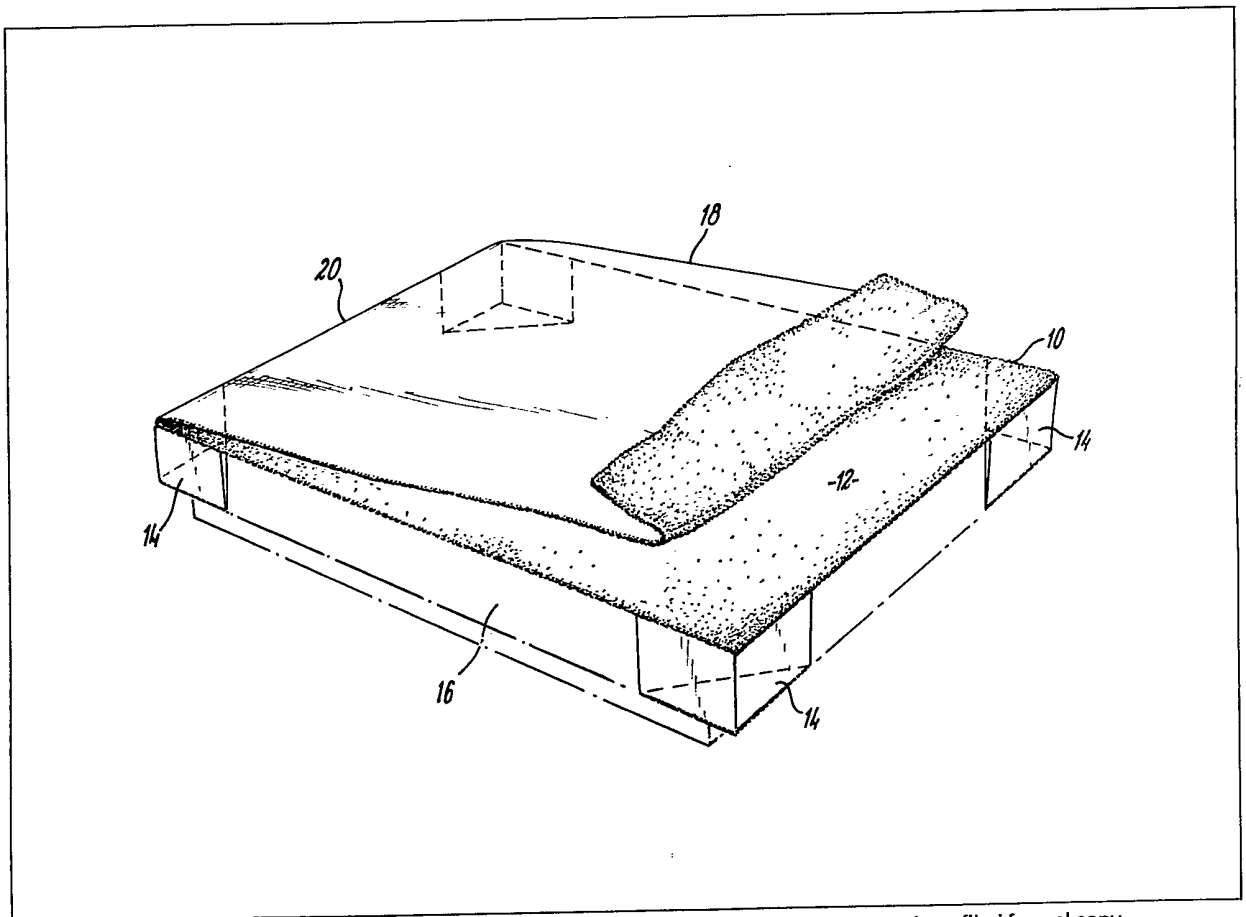


The drawing(s) originally filed was/were informal and the print here reproduced is taken from a later filed formal copy.

GB 2 072 007 A

1/1

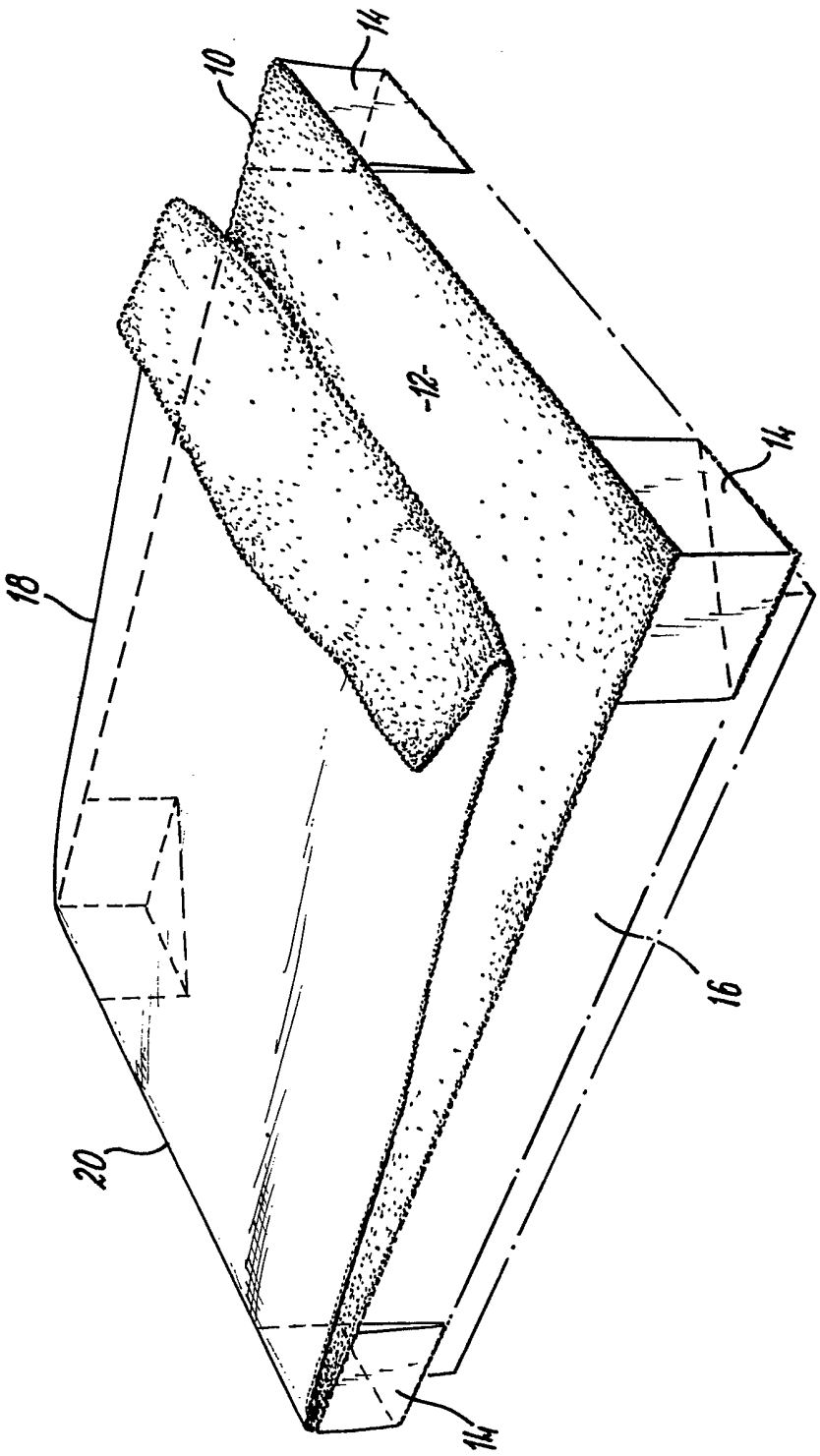

SPECIFICATION

**Bedclothing**

This invention relates to bedclothing.

The use of electrically heated bedclothing, particularly so-called electric blankets, has now become widespread. Such blankets while being very effective are, of course, inoperative when there is a power failure such as may happen in winter when the blanket is most needed.

Moreover electric blankets are very dangerous and possibly lethal if used by anyone who is incontinent, such as an elderly geriatric patient. There is, therefore, a need for a blanket that will suppy adequate warmth without the risks and disadvantages attendant on electric blankets.

According to the invention there is provided a blanket comprising an under layer adapted to be releasably secured to a bed mattress and an over layer permanently joined at one end thereof to a corresponding one end of the under layer.

A specific embodiment of the invention will now be described by way of example with reference to the accompanying drawing which shows a blanket.

Referring to the drawing the blanket comprises a rectangular under layer 10 of textile fabric for example a woven or knitted fabric of synthetic yarn such as acrylic polyester formed with a fleecy surface 12 on the upper side thereof. A pocket 14 is attached to the underside of the layer 10 at each corner thereof. The pockets are adapted to fit around the corners of a mattress 16 whereby the blanket is held in position on a bed.

An upper layer 18 substantially the same size as the layer 10 and of the same material extends from end 20 of the lower layer to form a cover. The upper and lower layers may be integral or may be joined together as by sewing or any other convenient permanent fastening.

CLAIMS

1. A blanket comprising an under layer adapted to be secured to a bed mattress and an over layer permanently joined at one end thereof to a corresponding one end of the under layer.

2. A blanket according to Claim 1 wherein the upper layer is releasably secured to the lower layer.

3. A blanket according to Claim 2 wherein the upper and lower layers are secured by means of a sliding clasp fastener.

4. A blanket according to Claim 1 wherein the upper and lower layers are integrally formed.

5. A blanket according to any preceding claim wherein the upper surface of the lower layer and the lower surface of the upper layer are provided with fleecy surfaces.

6. A blanket substantially as hereinbefore described with reference to Figure 1, the accompanying drawing.

Printed for Her Majesty's Stationery Office, by Croydon Printing Company Limited, Croydon, Surrey, 1981.
Published by The Patent Office, 25 Southampton Buildings, London, WC2A 1AY, from which copies may be obtained.