Jan. 21, 1958 E. H. STRATTON 2,820,250

PRESS

Filed June 16, 1954 7 Sheets-Sheet 1

FIG. 1

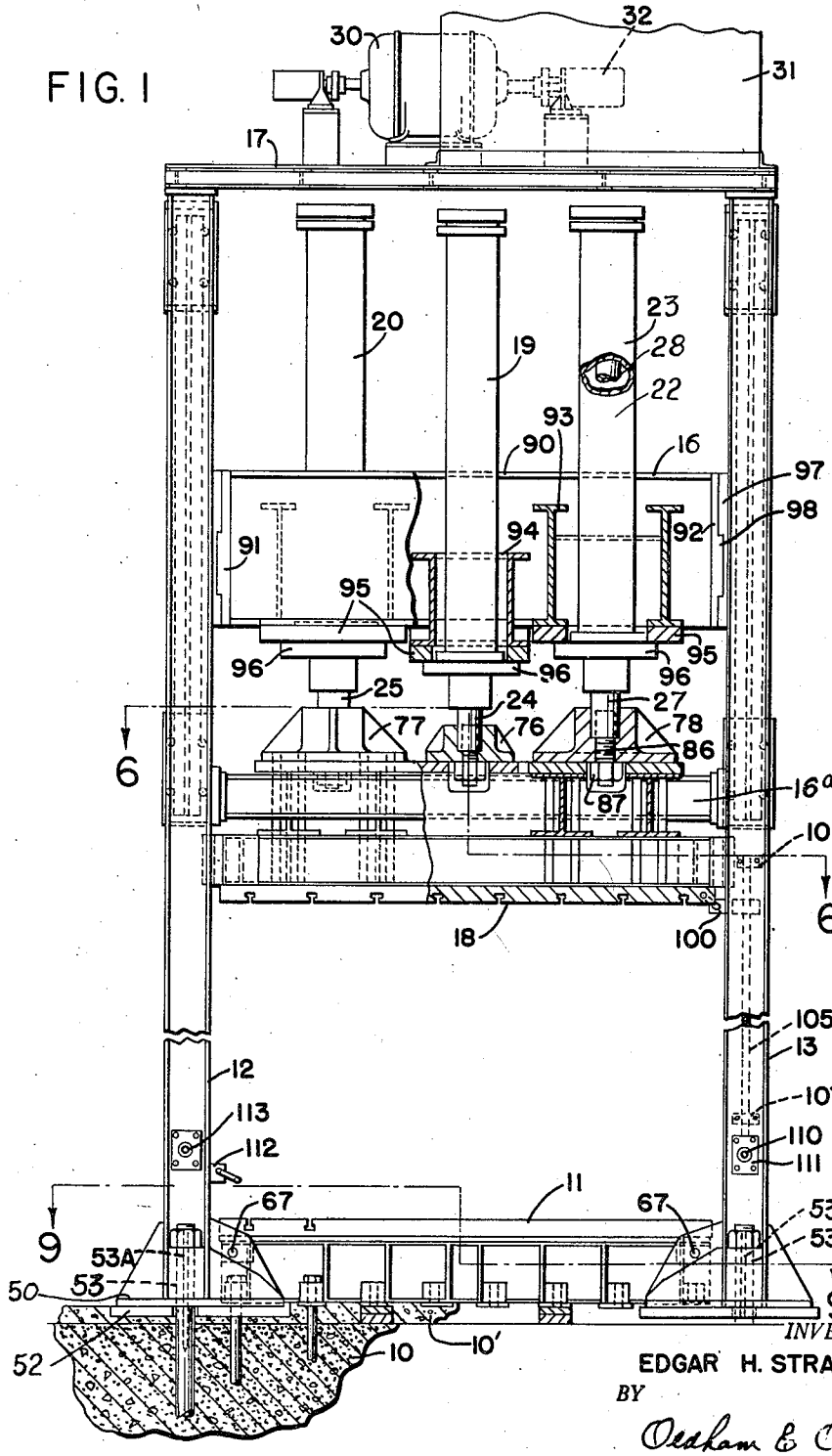


INVENTOR.

EDGAR H. STRATTON

BY

Oldham & Oldham

ATTORNEYS

Jan. 21, 1958 E. H. STRATTON 2,820,250

PRESS

Filed June 16, 1954 7 Sheets-Sheet 2

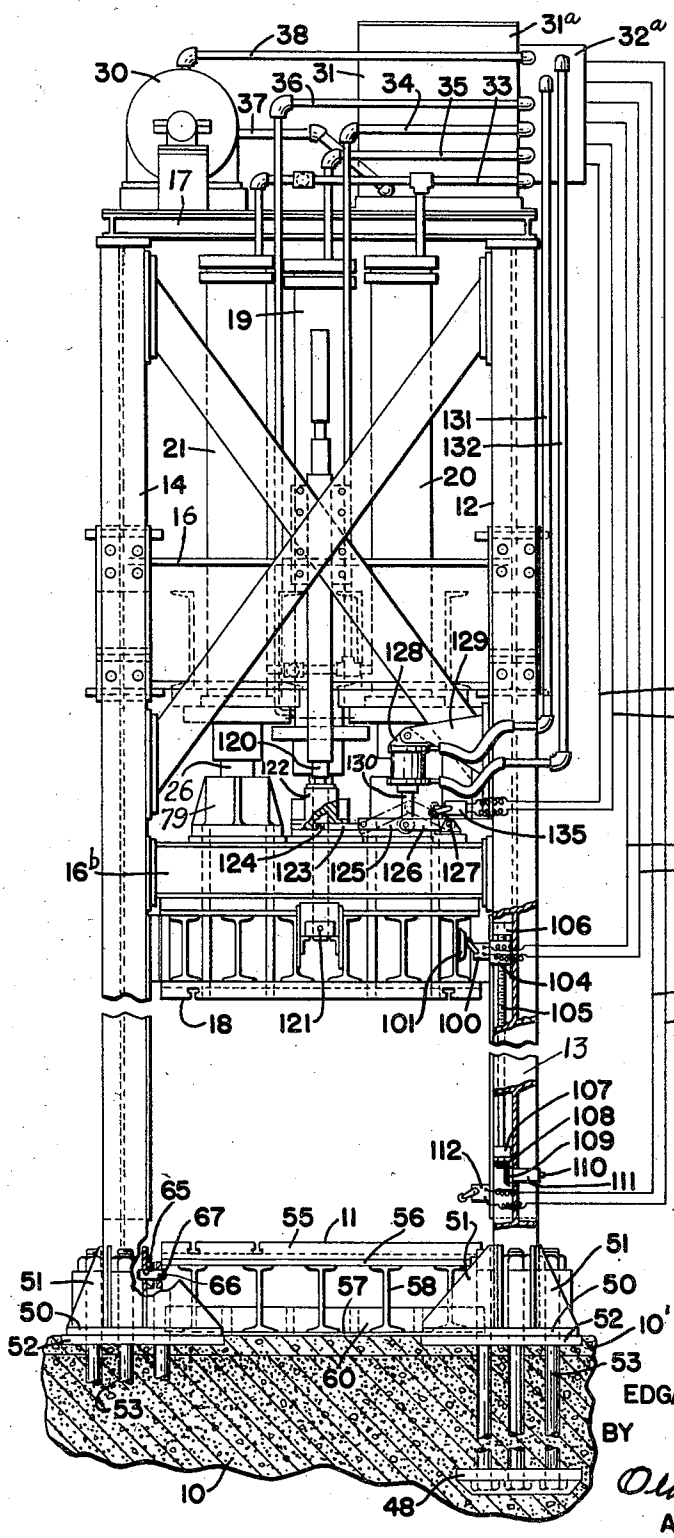


FIG. 2

INVENTOR.
EDGAR H. STRATTON
BY
Oldham & Oldham
ATTORNEYS

Jan. 21, 1958 E. H. STRATTON 2,820,250

PRESS

Filed June 16, 1954 7 Sheets-Sheet 3

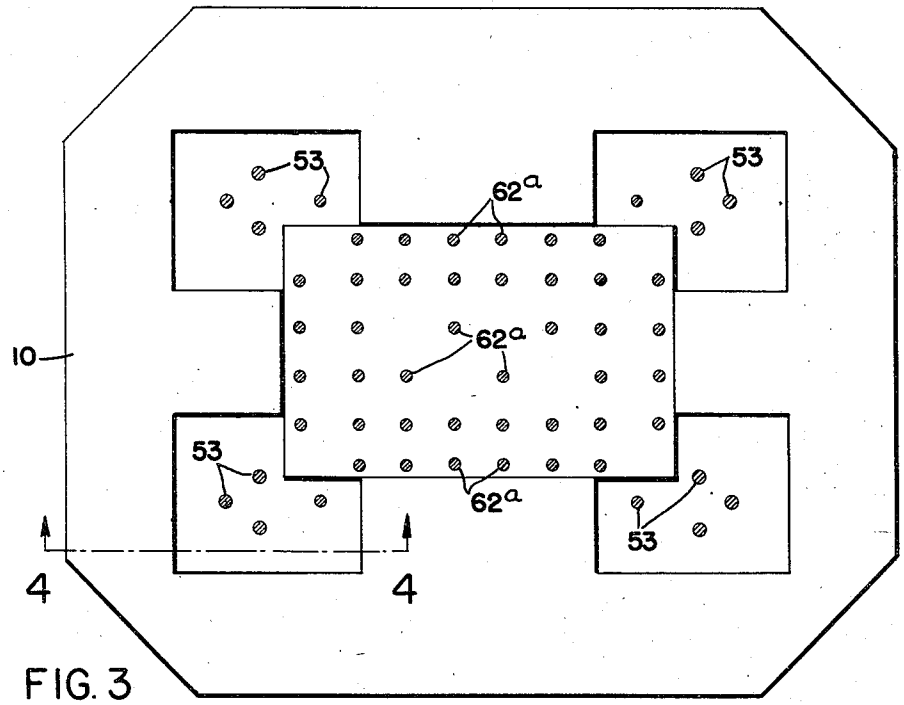


FIG. 3

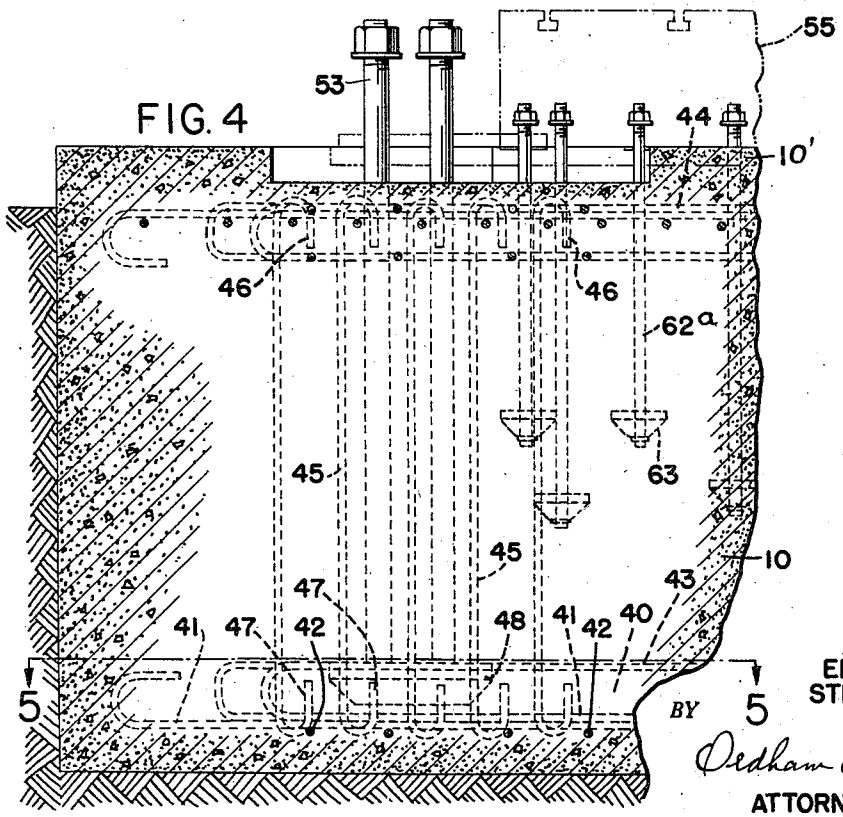


FIG. 4

INVENTOR.
EDGAR H.
STRATTON

BY Oldham & Oldham

ATTORNEYS

Jan. 21, 1958 E. H. STRATTON 2,820,250

PRESS

Filed June 16, 1954 7 Sheets-Sheet 4

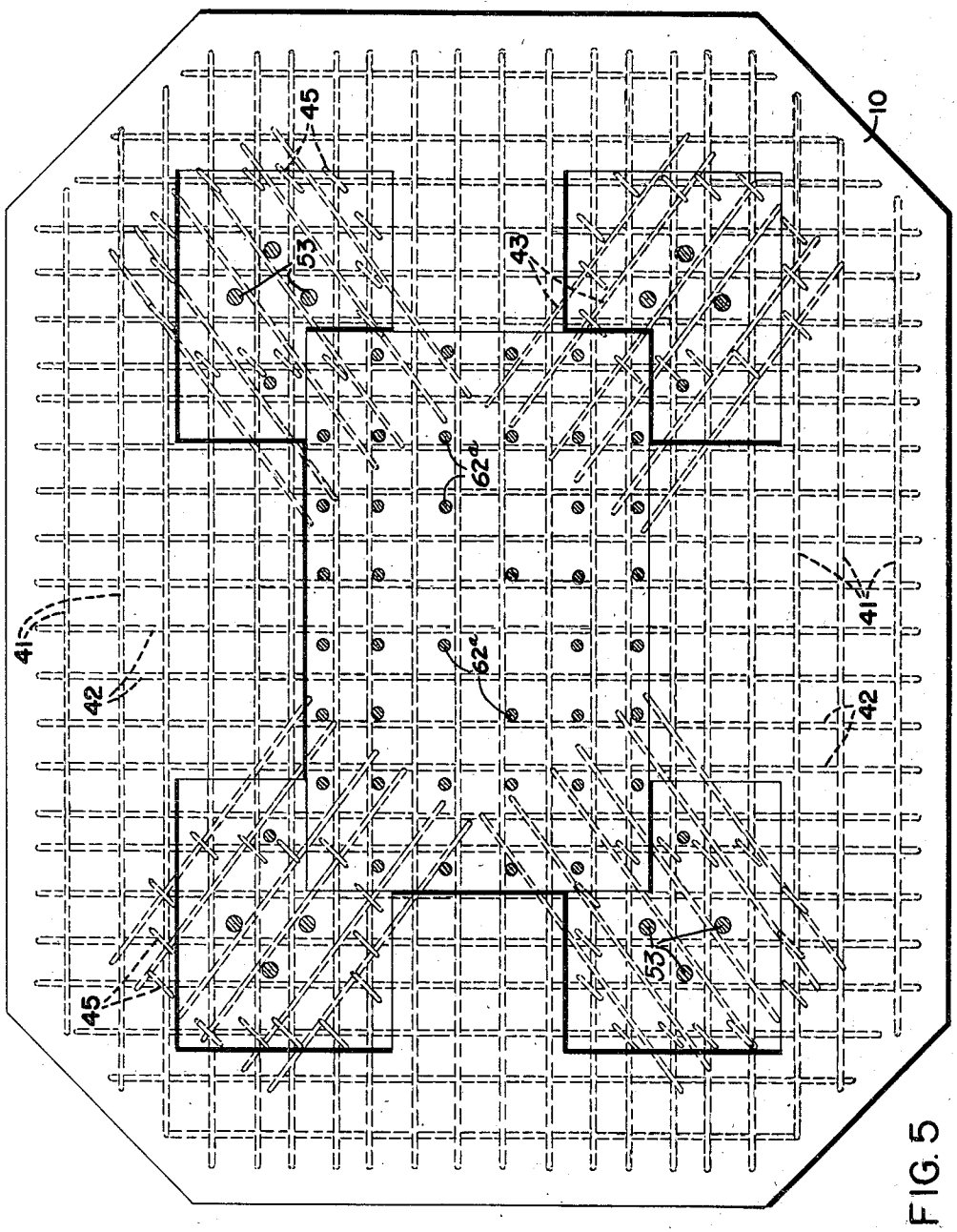


FIG. 5

*INVENTOR.*
EDGAR H. STRATTON
*BY*
Oldham & Oldham
ATTORNEYS

Jan. 21, 1958 E. H. STRATTON 2,820,250

PRESS

Filed June 16, 1954

7 Sheets-Sheet 5

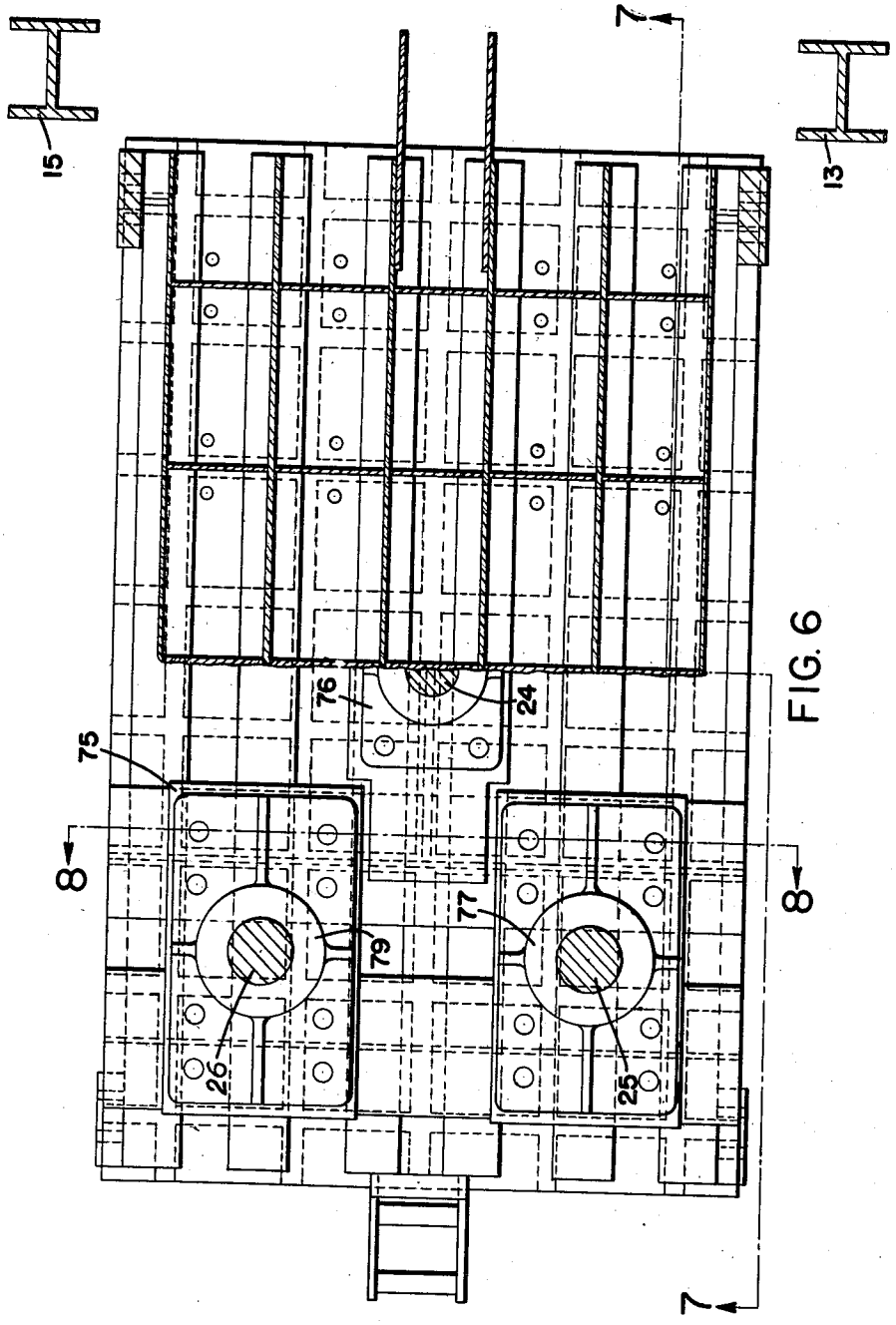


FIG. 6

INVENTOR.
EDGAR H. STRATTON
BY
Oldham & Oldham
ATTORNEYS

Jan. 21, 1958 E. H. STRATTON 2,820,250

PRESS

Filed June 16, 1954 7 Sheets-Sheet 6

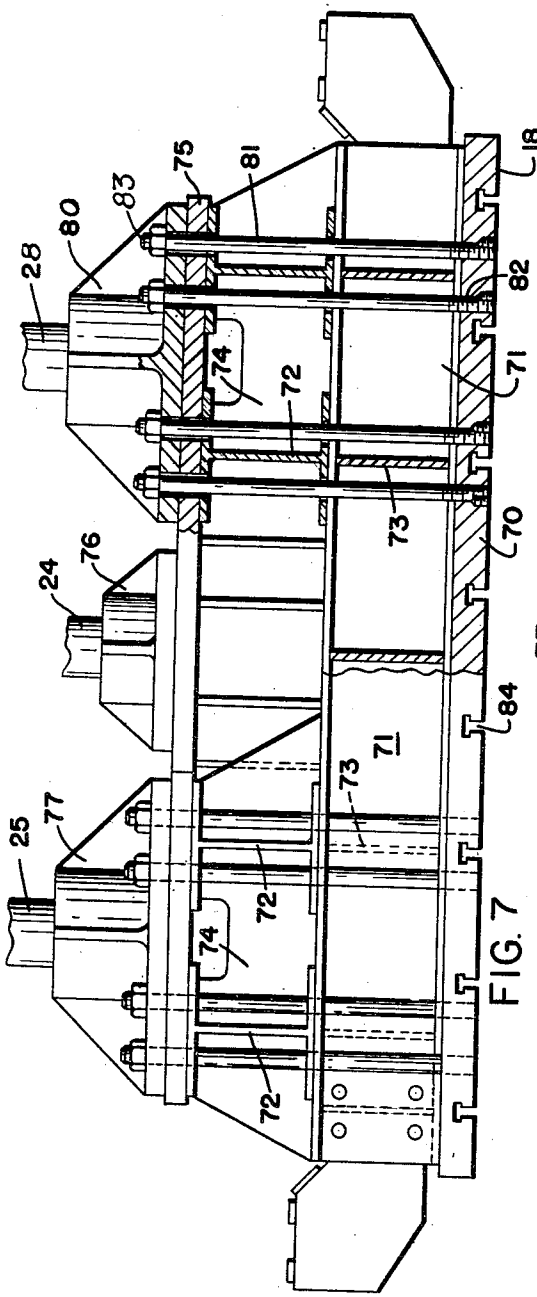


FIG. 7

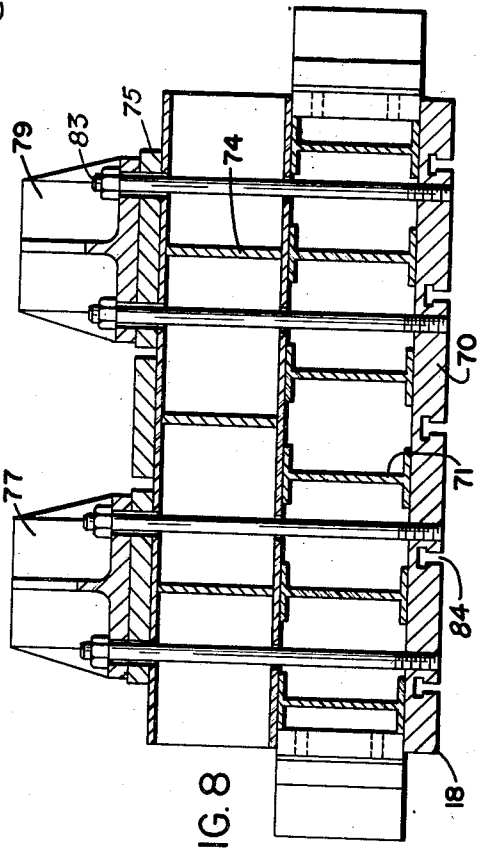


FIG. 8

*INVENTOR.*

EDGAR H. STRATTON

*BY*

Oldham & Oldham

ATTORNEYS

Jan. 21, 1958 E. H. STRATTON 2,820,250

PRESS

Filed June 16, 1954 7 Sheets-Sheet 7

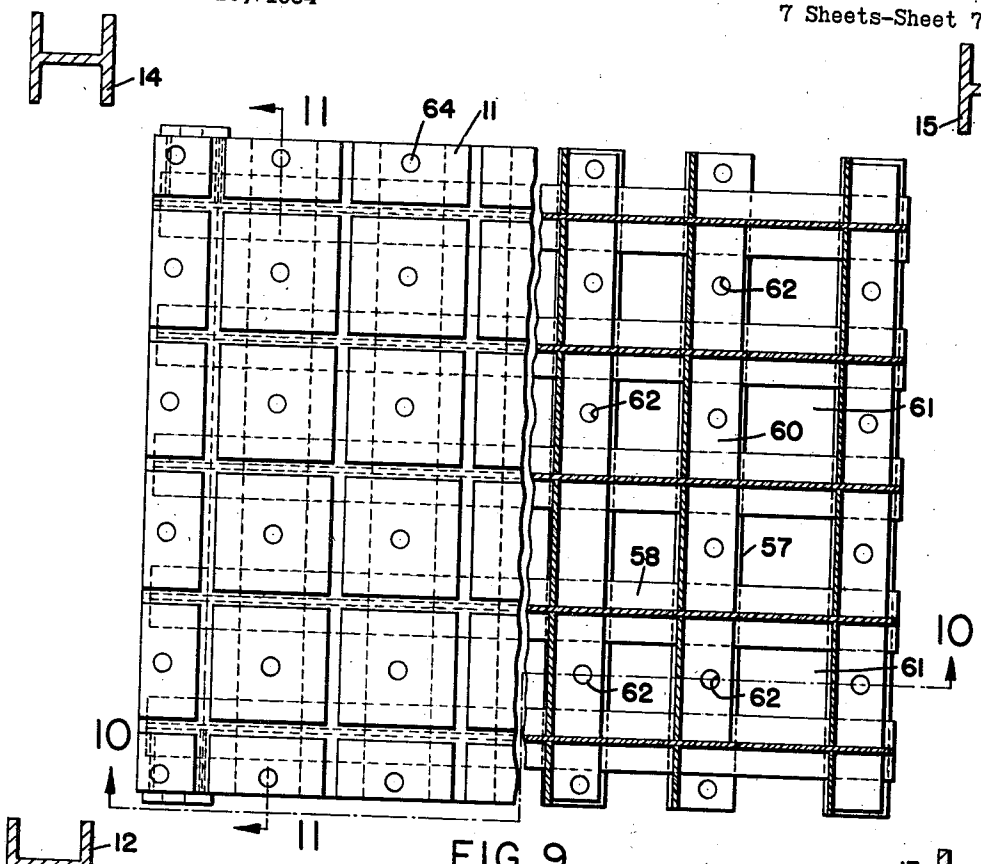


FIG. 9

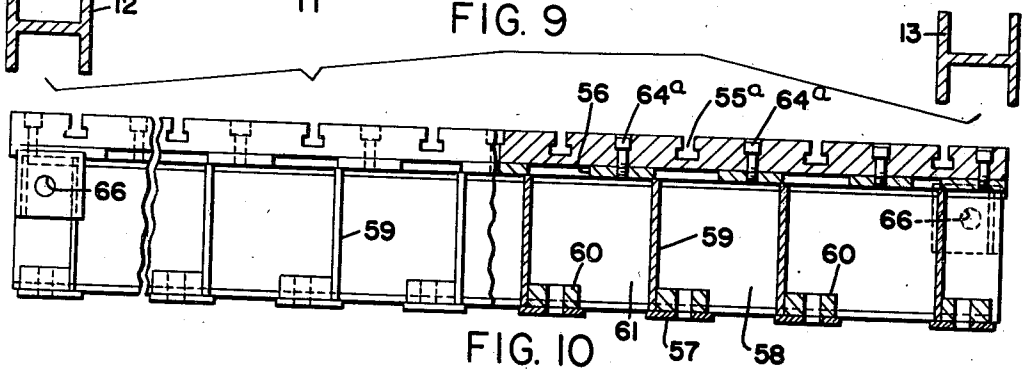


FIG. 10

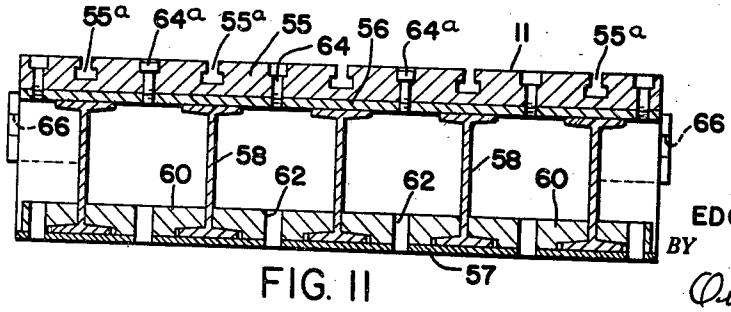


FIG. 11

INVENTOR.
EDGAR H. STRATTON
BY
Oldham & Oldham
ATTORNEYS

United States Patent Office 2,820,250 Patented Jan. 21, 1958



2,820,250

# PRESS

Edgar H. Stratton, Cuyahoga Falls, Ohio, assignor to Adamson United Company, Summit County, Ohio, a corporation

Application June 16, 1954, Serial No. 437,153

2 Claims. (Cl. 18—16)

This invention relates to presses, and, more particularly, to hydraulically-operated presses of great size, for use in molding rubber, plastics, and other materials confined between mold members, although the press may also be used for pressing flat sheet materials.

Where presses are required having large and extensive platens or pressing surfaces for applying great pressure, it has been necessary in the past to provide great cross-sectional areas of metal to resist deformation of the platens due to bending forces. Such presses were of great weight and consequently very expensive.

The present invention aims to provide a press having a great area of pressing surface with a minimum amount of metal and at minimum cost.

Objects of the invention are: to provide a press having minimum platen deflection, to provide for support of the lower platen through a concrete foundation from the earth, to provide a press in which the principal parts are of fabricated structural steel or other suitable material, and to provide independent support and anchorage of the lower platen and the upper platen supporting frame from the same foundation.

Other objects are to provide fast elevation and lowering of the upper platen, to provide for application of high pressure determinately near the end of lowering movement, to provide against accidental operation of the press, to provide automatic stopping of elevation and lowering of the press, and to provide adjustment of the movement-limiting elements.

Still further objects are to provide reinforcement of the concrete foundation in a manner to strengthen it and to resist the applied loads in the most efficient manner, and to assist in anchoring the frame.

These and other objects will appear from the following description and the accompanying drawings.

Of the drawings:

Fig. 1 is a front elevation of a press constructed in accordance with and embodying the invention, parts being broken away and parts shown in section, a portion of the foundation being shown in section and portions of the control mechanism being omitted;

Fig. 2 is a side elevation thereof, parts being broken away and parts shown in section;

Fig. 3 is a plan view of the foundation thereof, the anchor bolts being shown in section;

Fig. 4 is a fragmentary vertical sectional view of the foundation, taken on line 4—4 of Fig. 3;

Fig. 5 is a horizontal sectional view of the foundation, taken on the level of line 5—5 of Fig. 4 and showing the arrangement of the frame-anchoring bolts, the frame-anchoring plates, and the lower reinforcing mat rods;

Fig. 6 is a plan view, partially in horizontal sectional view, taken on line 6—6 of Fig. 1 showing the construction of the upper platen;

Fig. 7 is a front elevation of the upper platen, partly broken away and in section, on line 7—7 of Fig. 6;

Fig. 8 is a vertical sectional view of the upper platen, taken on line 8—8 of Fig. 6;



Fig. 9 is a horizontal plan and sectional view of the lower platen, taken on line 9—9 of Fig. 1;

Fig. 10 is a vertical and partially sectional view of the lower platen, taken on line 10—10 of Fig. 9; and

Fig. 11 is a vertical sectional view, taken on line 11—11 of Fig. 9.

Referring to the drawings, which show one embodiment of the invention, the numeral 10 designates a concrete foundation which supports the lower or fixed platen 11 of the press and also anchors and supports independently of the platen a plurality of columns or tension members 12, 13, 14, 15 (see Fig. 9). Secured to the columns at a distance above the lower platen is a cross frame 16, and at the top of the columns is a second cross-frame 17, and a third set of cross frame members 16*a*, 16*b* connects columns 12, 13, 14 and 15 at a position below the cross frame 16.

The upper platen 18 is slidably mounted on the columns for vertical movement toward and from the lower platen. For elevating and lowering it, a plurality of hydraulic double-acting cylinders 19, 20, 21, 22 and 23 are secured to the cross-frame 16 and their respective piston rods 24, 25, 26, 27 and 28 are secured to the movable platen, the cylinder 22 being directly in the rear of cylinder 23 in Fig. 1 and cylinder 23 being partially broken away to show it.

For supplying fluid under pressure to operate the hydraulic cylinders, an electric motor 30 is mounted on the cross-frame 17 and drives a hydraulic pressure supply unit 31, also mounted on cross-frame 17. The supply unit is of the type comprising a constantly running pump 32, a reservoir 31*a* of pressure fluid circulated thereby, and an electrically-controlled valve unit 32*a* for controlling delivery of fluid under high or low pressure to the operating cylinders. Such hydraulic pressure systems are well-known in the art as shown for example in U. S. Patent No. 2,587,076. As seen in Fig. 2, a pipe 33 connects the upper end of cylinders 20, 21, 22 and 23 to the hydraulic supply valve unit 32 and a pipe 34 connects the lower end of those cylinders to the valve unit so that these cylinders may be operated only in unison. The upper end of cylinder 19 is connected to the supply valve unit by a separate pipe 35 and the lower end thereof is connected to the valve unit by a pipe 36 whereby it may be operated to elevate or lower the movable platen independently of the other cylinders under low pressure and at high speed, or may be operated with the other cylinders at high pressure, to assist in applying pressure to the movable platen, or for forcibly separating the molds after having pressed and cured the material therein. A pipe 37 connects the pump 32 to the reservoir 31*a* and a pipe 38 connects the pump to the valve unit.

As the colmns or tension members 12, 13, 14 and 15 are subjected to great tension in use, whereas the lower or fixed platen 11 is subjected to great pressure, it has been found desirable not to tie the margins of the lower platen directly to the columns and for this purpose the lower platen is uniformly supported by direct contact with the foundation, which is of poured concrete, and the columns are separately supported by and anchored to the foundation at positions spaced from the lower platen. For this purpose the foundation is made of such length and breadth as to extend well beyond the columns and of great depth. Near the base of the foundation, a mat 40 of reinforcing steel rod is embedded in the concrete and comprises spaced-apart rods 41 extending in parallel relation, longitudinally of the foundation, and similar rods 42 extending laterally of the foundation in spaced-apart parallel relation, and additional rods 43 which extend diagonally of the foundation in spaced-apart parallel relation at each corner of the foundation in a direction radiating from the center of the foundation

and underlying each corner of the lower platen and the nearest column.

A similar mat 44 of similarly-arranged reinforcing rods of steel is embedded in a horizontal plane of the foundation near its upper surface. Vertically-disposed reinforcing rods 45 are arranged in areas surrounding the columns of the press, and have hooked upper and lower ends 46 and 47, respectively, the ends 46 being hung over bars of the upper mat 44 and the ends 47 being hooked about rods of the lower mat 40.

Below the base of each column, an anchor plate 48 is embedded in the concrete just above the longitudinal and lateral rods of the lower mat 40 and below the diagonal rods 43. The columns 12, 13, 14 and 15 have sole plates 50 of generally L-shape, well-braced by gusset plates 51 as an integral part of the columns. Each sole plate 50 rests upon a bearing plate 52 of steel, embedded in the upper surface of the concrete. Anchor bolts 53 extend through apertures in plates 50 and 52 and anchor plates 48, and through the intervening concrete. The anchor bolts 53 are each preferably formed with an axial opening 53*a* extending from the upper end thereof to a position below the face of the foundation, to permit steam or other hot fluid to be circulated therein to heat the bolts before drawing down their nuts, and provides great initial tension therein. Bearing plates 52 prevent direct percussive loading of the concrete.

The lower or fixed platen 11 comprises a solid plate 55 of steel supported by parallel strips 56, 57 of steel spaced apart by parallel I-beams 58 arranged in spaced-apart relation (see Figs. 9 to 11) with the strips 56, 57 crossing the flanges of the I-beams. Vertical steel plates 59 extend between the I-beams at spaced intervals, and anchoring blocks 60 also extend between the I-beams. The plate 56, strips 57, I-beams 58, plates 59, and blocks 60 are all welded together to provide a grid-like structure having box cells 61 open at its upper and lower faces for embedding in the foundation. A multiplicity of anchor holes 62 are provided through the blocks 60 and anchor bolts 62*a* extend through the concrete and engage anchor plates 63 embedded in the concrete between the upper and lower mats. The arrangement is such that, with the plate 55 removed, the nuts of the anchor bolts may be tightened, and, with the platen in position above the poured concrete, a layer of grout 10' may be poured through the grill to evenly support the platen. The plate 55 has a multiplicity of cap-screw openings 64 therethrough and corresponding threaded openings are provided in the underlying grill, so that the plate may be secured in place by cap screws 64*a*. T-slots 55*a* are provided in the plate 55 for securing molds thereto.

For convenience in erecting the press, each column has an aperture 65 extending horizontally through one of its gusset plates, and an aligned opening 66 is provided in the lower platen. A removable dowel pin 67 is mounted in the aligned openings during erection. After the press has been erected and the grout 10' is set, the dowel pins 67 are removed so that stretching of the columns under tension loads does not lift the corners of the platen and thereby deflect the platen or change its manner of support.

The upper or movable platen comprises a solid steel plate 70 (see Figs. 6 to 8) backed by a layer of parallel spaced-apart I-beams 71, and these are, in turn, backed by a second layer of I-beams 72. Bridging-plates 73 span the space between the I-beams 71 at intervals and bridging-plates 74 span the space between I-beams 72 at intervals. I-beams 71 and 72 and plates 73 and 74 are all welded together, to provide a unitary article. Plates 75 of steel are mounted over I-beams 72 at the bearing positions of the pistons of the hydraulic cylinders, and are welded thereto. Socket heads 76, 77, 78, 79, 80, for securing the piston rods are mounted over plates 75 and are secured to the platen by studs 81, which extend through the platen and engage threaded openings 82 through the plate 70. Nuts 83 at the upper ends of the studs, secure the socket heads in place and at the same time secure the plate 70 to the assembly. The plate 70 has T-slots 84 in its face for securing molds, dies, or other pressing equipment.

As seen in Fig. 1, each piston rod, such as 21, is secured in its socket head 78 by a threaded stud 86 and a nut 87.

The cross frame 16 is constructed of thick I-beam members 90 welded at their ends to end plates 91, 92, the I-beam members being in spaced-apart relation. Channel beams 93 of less depth bridge the space between I-beam members 90 at spaced intervals and flush therewith at their lower faces and are welded to the I-beam members. Channels 94 bridge the space between two channels 93 at the center of the press and are welded thereto. Bearing plates, such as 95, of steel, are welded to the lower flanges of the channels and provide seats to which flanges 96 of the hydraulic cylinders are bolted. A notched key plate 97 is fixed to each column of the press and engages a key of the plates 91, 92 as indicated at 98 to position the cross member, which is also secured to the columns by bolts.

For controlling stopping of elevation of the press, a normally closed-limit switch 100 is mounted on one of the columns, 12, in position to be opened by a cam 101 mounted on the movable platen. It is connected electrically, as by wires 102, 103 to the electric valve control unit 32 where closing of switch 100 causes elevating fluid pressure to be cut off, as by operation of a solenoid-controlled valve of the hydraulic supply unit. As it may be desired to shorten or lengthen the stroke of the press, as the press is of considerable height, limit switch 100 is mounted on a vertically-adjustable block 104 threaded upon a vertical lead screw 105. The lead screw is rotatable in bearings 106, 107, and has a bevel pinion 108 secured thereto. A bevel gear 109 is fixed to a shaft 110 in a bracket 111 attached to column 12 near the floor level. The shaft 110 has a squared end that may be engaged by a crank to adjust the limit switch to different positions without resorting to climbing of ladders.

A limit switch 112 is similarly mounted on column 12 for vertical adjustment in similar manner by a crank-operated shaft 113. It is also connected by wires 114, 115 to the electric valve control unit 32. Closing of limit switch 112 causes the supply of low pressure fluid at high speed to be cut off from cylinder 19 and high pressure fluid at slow speed to be applied to all the cylinders near the closing of the press.

Both limit switches 100 and 112 may be adjusted to accommodate closing of molds of different vertical dimensions, and this may be accomplished by an operator located at the level of the lower platen.

For locking the upper movable platen to the frame against vertical movement and for disabling the operation of the hydraulic cylinders when the platen is so locked, a pair of vertically-disposed latch rods 120 are secured to the upper platen, as at 121 and extend upwardly therefrom through guides 122, there being one such latch rod at each side of the press. Slidably mounted in a groove formed in the guide 122 is a latch bar 123 having a notched end for entering an annular groove 124 of the latch rod. Latch bar 123 is pivotally mounted on a toggle comprising toggle links 125, 126. Link 126 is pivotally mounted at 127 to cross frame member 16*a*. A fluid pressure operated double-acting cylinder 128 is pivotally mounted on a bracket 129 secured to the press frame and its piston rod 130 is pivotally connected to toggle links 125, 126. Pipes 131, 132 connect the upper and lower ends, respectively, of cylinder 128 to the pressure fluid supply unit 31 or to an external supply of compressed air. The arrangement is such that by lowering of the piston of cylinder 128 the latch bar 123 is engaged in notch 124 and raising it withdraws the latch. The latch bar 120 may have a plurality of latching grooves at different elevations.

A limit switch **135** is mounted on the stationary frame of the press and is normally open. It may be closed by raising of toggle link **126** and consequent unlatching of the movable platen. The switch is connected by wires **136, 137** to the electric valve control unit **32.** When the switch is closed, it may energize a solenoid valve and open it to permit supply of hydraulic pressure to cylinders **19, 20, 21, 22** and **23** and when opened by latching of latch bar **120**, it de-energizes the solenoid valve, closing off supply of pressure to the press cylinders.

It will be seen from the foregoing description that the lower platen of the press may be made relatively light in weight as it is reinforced by the concrete foundation which supports it. It will also be seen that the platen is not directly attached to the columns or tension members, but is supported only by the foundation to which the tension members are secured. The foundation is so reinforced as to provide high resistance to flexure. The metal portions of the press may be constructed largely from standard structural materials, and assembly of the press is facilitated by the removable dowels for aligning the lower platen prior to grouting in the platen.

Modifications of the invention may be made without departing from the spirit and scope of the invention, as it is defined by the following claims:

I claim:

1. A press comprising a laterally extensive lower fixed platen, a foundation supporting the platen, a frame having columns spaced laterally from said platen and independently supported by the same foundation anchor means attaching said platen to said foundation, an upper platen slidably supported by said frame, and means on said frame for moving said upper platen toward and from said fixed platen, said foundation comprising a single deep body of concrete underlying said lower platen and said columns, anchor bolts in said body and extending vertically thereof from the base of said foundation and connected to said columns for resisting the tensile strain of said frame, anchor bolts in said body and extending vertically thereof for retaining said fixed platen, and reinforcing rods of metal embedded in said body and extending in such horizontal direction as to underlie the anchored portions of both said fixed platen and said frame, said reinforcing rods being arranged as mats of parallel spaced-apart rods located near the upper and lower faces of the foundation, each mat comprising two groups of parallel spaced-apart rods arranged with the rods of one group crossing the rods of another, and additional rods extending vertically of the concrete body and having hooks at their upper and lower ends for engaging about rods of said mats.



2. A press comprising a laterally extensive lower fixed platen, a foundation supporting the platen, a plurality of columns supported by said foundation independent of said fixed platen and anchored thereto in laterally spaced apart relation to said lower platen, a movable platen slidably mounted on said columns, a cross-frame secured to said columns, hydraulic cylinder means mounted on said cross-frame and engaging said movable platen to move it toward and from the fixed platen, constantly operating pressure fluid supply means supported by said columns and connected to said hydraulic cylinder means for lowering and raising the same, electrically controlled valve means for controlling supply of pressure fluid to said cylinders, a latch rod mounted on said movable platen and engageable with a latch bar mounted on the frame, fluid-operated means for moving said latch bar, limit switches on said columns and electrically in the control circuits of said electrically-controlled valve means for controlling operation thereof, means on said movable platen and engageable with said limit switches for operating them, and means for adjusting said limit switches along said columns, one of said limit switches operating when closed by elevating movement of said movable platen to shut off the supply of operating fluid to said cylinder means and to engage the latching means.

**References Cited** in the file of this patent

UNITED STATES PATENTS

| | | |
|---|---|---|
| 764,647 | Webb | July 12, 1904 |
| 1,309,384 | Yeomans | July 8, 1919 |
| 1,907,083 | Meyercord et al. | May 2, 1933 |
| 1,919,070 | McKay et al. | July 18, 1933 |
| 2,410,712 | Cannon | Nov. 5, 1946 |
| 2,420,813 | Cameorata | May 20, 1947 |
| 2,587,076 | Verson et al. | Feb. 26, 1952 |
| 2,599,022 | Sedgwick | June 3, 1952 |
| 2,689,978 | Roger | Sept. 28, 1954 |