E. I. DODDS.

ELECTRIC FAN FOR RAILWAY CARS.

APPLICATION FILED JAN. 22, 1913.

1,088,687. Patented Mar. 3, 1914.

2 SHEETS—SHEET 1.

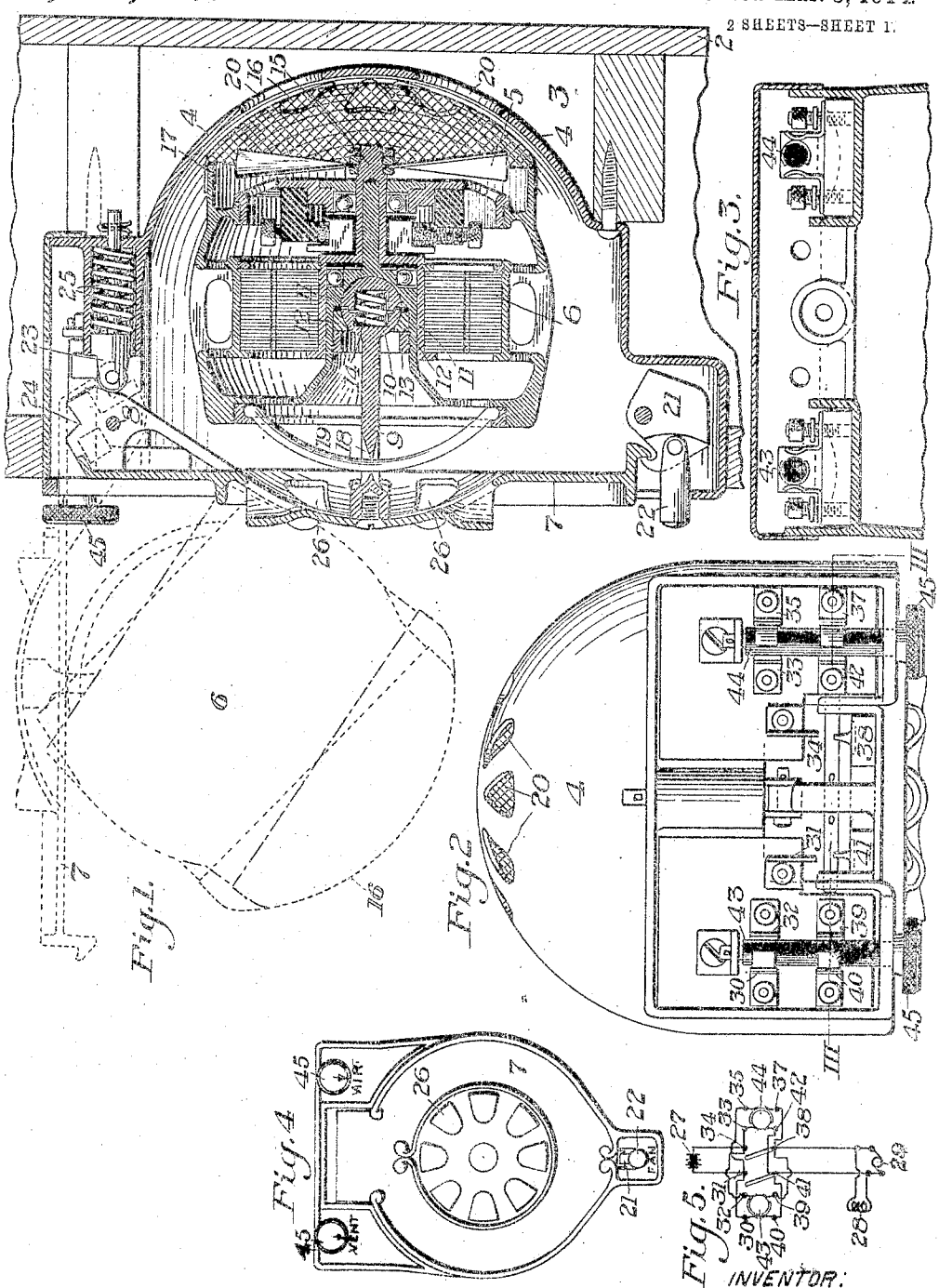

WITNESSES

Geo. M. Grabb's

George Cormer

INVENTOR:

Ethan I. Dodds.

E. I. DODDS.

ELECTRIC FAN FOR RAILWAY CARS.

APPLICATION FILED JAN. 22, 1913.

1,088,687.

Patented Mar. 3, 1914.

2 SHEETS—SHEET 2.

Fig. 6.

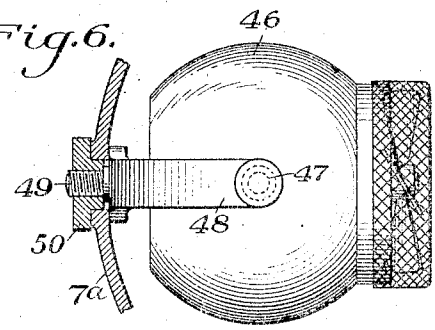

Fig. 7.

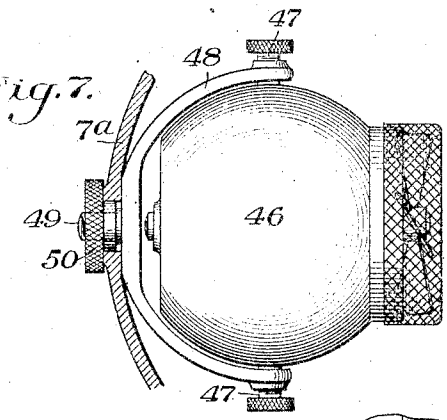

Fig. 8.

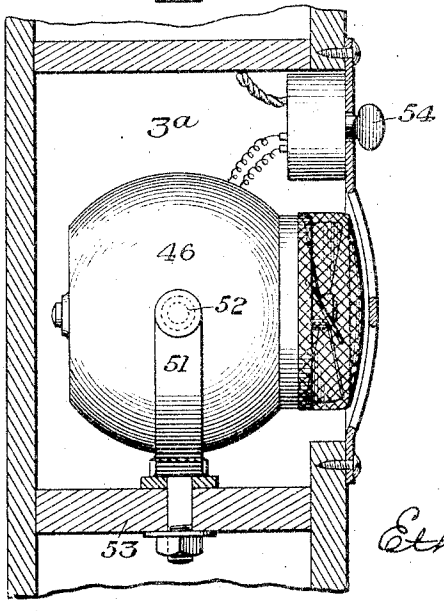

WITNESSES

R. A. Balderson

G. B. Blemmy

INVENTOR

Ethan I. Dodds

UNITED STATES PATENT OFFICE.

ETHAN I. DODDS, OF CENTRAL VALLEY, NEW YORK, ASSIGNOR TO KERNER MANUFACTURING COMPANY, OF PITTSBURGH, PENNSYLVANIA, A CORPORATION OF PENNSYLVANIA.

ELECTRIC FAN FOR RAILWAY-CARS.

1,088,687. Specification of Letters Patent. Patented Mar. 3, 1914.

Application filed January 22, 1913. Serial No. 743,541.

To all whom it may concern:

Be it known that I, ETHAN I. DODDS, a citizen of the United States, residing at Central Valley, Orange county, New York, have invented a new and useful Improvement in Electric Fans for Railway-Cars, of which the following is a full, clear, and exact description, reference being had to the accompanying drawings, forming part of this specification, in which—

Figure 1 is a vertical sectional view illustrating one form of my invention, and showing the concealed position of the fan in full lines, and its working position in dotted lines; Fig. 2 is a top plan view with a portion of the casing removed; Fig. 3 is a section on the line III—III of Fig. 2; Fig. 4 is a front elevation of the cover plate; Fig. 5 is a wiring diagram of the motor circuits; Figs. 6 and 7 are respectively plan and side views with portions in section showing a modified mounting of the fan; and Fig. 8 is a vertical sectional view showing another modification.

My invention has relation to electric fans which are particularly designed for use on railway trains.

The object of my invention is to provide an electric fan and arrangement thereof adapted for use in the berths, sections, or state rooms of a railway car, the fan being placed in a pocket in the walls of the car. In one form of my invention I provide means whereby the fan can be swung outwardly from the pocket when in operation somewhat in the manner of an ordinary electric berth lamp. I also preferably provide means whereby the direction of rotation of the fan may be reversed so that it may be operated either to supply fresh air to the berth or section, or to exhaust the air therefrom.

My invention is susceptible of various arrangements in detail. In the accompanying drawings, I have shown a number of different arrangements, which will now be described, reference being first had to that form of my invention shown in Figs. 1 to 5, inclusive. In these figures, the numeral 2 designates a portion of the side wall casing of a railway car, and in which is formed a pocket 3 for the reception of the electric fan. The pocket 3 may have a ventilating connection with the outer air in any suitable manner. Seated in this pocket is a fixed casing 4, within which is supported the fan 5 and its electric driving motor 6. The motor is supported from a hinged front plate 7 arranged to be swung outwardly and upwardly on the axis 8. This plate has the inwardly projecting arm 9 terminating in a ball end 10, which has a swivel bearing in the socket 11 at the center of the motor, being secured therein by the keeper ring 12 and nut 13. I have shown the ball head 10 as formed in two sections, which are kept expanded into a close bearing fit in the walls of the socket by means of an inclosed spring 14. The armature shaft of the motor has the extension 15, to which the fan 5 is secured. 16 is a suitable screen guard secured to the casing 17 of the motor. Owing to the ball and socket connection between the motor and the arm 9, the fan and motor are capable of a universal swiveling movement to give any desired angular position of the fan. To permit this, the arm 9 is slotted, as indicated at 18, to engage the yoke portion 19 of the motor casing. The rear portion of the fixed casing 4 is shown as provided with a plurality of openings 20. The motor and fan are normally secured within the pocket 3 by means of any suitable latch, such as that shown at 21, engaging the lower part of the hinged plate 7, and controlled by a suitable push button 22 projecting through the lower front part of the casing 4. The fan and motor may be held in the exposed position shown in dotted lines in Fig. 1, by means of the spring-pressed detent 23, which is adapted to snap into the recess 24 in the pivotal portion of the plate 7 in such a manner as to hold the parts in their open position. When, however, the plate 7 is pulled downwardly by the hand, the pressure of the spring 25 which controls the latch 23 may be overcome. The front plate 7 is preferably provided with a series of openings 26, for the purpose hereinafter described.

In Fig. 5 I have shown a wiring diagram, which illustrates a suitable circuit arrangement for the motor. In this diagram 27 designates the source of current supply, which may be the source which supplies the lighting system of the car or train. 28 designates the field winding of the motor, and 29 its armature. 30, 31 and 32 designate three relatively fixed switch contacts, which are connected in multiple to one side of the

supply line, and 33, 34 and 35 designate three other contacts which are connected in multiple to the other side of such line. 37, 38 and 39 designate three contacts which are connected in multiple to one side of the motor circuit, and 40, 41 and 42, three other contacts which are connected in multiple to the other side of the motor circuit. The circuits between the respective pairs of contacts 30 and 40, 35 and 39, 33 and 42, and 32 and 37, are controlled by the two movable switch devices 43 and 44. Each of these switch devices consists of a rotary plug having a conducting segment and a non-conducting segment, the end of the plug projecting outwardly through the upper portion of the casing 4 and being provided with a button 45, or other suitable actuating device. One set of the contacts 31 and 34, 38 and 41, as for instance, the contacts 38 and 41, are carried by the movable front plate 7; and when said front plate is swung upwardly on its pivot 8 in the position shown in dotted lines in Fig. 1, these contacts are caused to engage the contacts 31 and 34, and thus close the motor circuit. In this manner, the mere act of raising the motor and fan to the position shown in dotted lines in Fig. 1, establishes the circuit of the motor and starts the fan into operation. It is desirable, however, to provide means whereby the fan may be operated in either direction while inclosed in the pocket 3; and it is for this purpose that the switch devices 43 and 44 and other coöperating contacts are provided. The operation of one of these switch devices will cause the fan to be driven in a direction to exhaust air from the berth, while by means of the other switch device the fan may be driven in the opposite direction to supply fresh air to the berth. This circulation of the air is made possible by reason of the openings 20 and 26 in the casing.

In the modification shown in Figs. 6 and 7, the motor casing 46 is shown as swiveled on trunnions 47, which are carried by the arms of a yoke 48. This yoke is in turn carried by a stub shaft 49, which is provided, at the outer side of the front casing member 7^a with an actuating button 50 by means of which it can be turned to vary the angle of the fan. The fan may also be turned about the axis of the trunnions 47, and for the purpose of securing the fan in the desired adjustment with respect to this axis, the trunnions may take the form of set screws, as shown.

In the modification shown in Fig. 8, the motor is supported in substantially the same manner as shown in Figs. 6 and 7, but the yoke 51 which carries the trunnions 52 is secured to the bottom wall 53 of the wall pocket 3^a. In this form of my invention the motor is not adapted to be swung out of the pocket, but always remains therein.

54 designates a hand switch for controlling the circuit of the motor. This switch may be adapted to control the circuit of the motor to drive the fan in either direction.

The advantages of my invention will be apparent, since it provides a simple and convenient arrangement of fan, which can be readily applied to railway berths, sections, state rooms, and the like, and by means of which the individual occupant or occupants of each berth or section may control the ventilation of that particular berth or section, as may be desired. The provision of means whereby the fan may be operated, either as an exhaust fan or as an air supply fan, while within the wall pocket, is also a feature of great advantage, since it enables the provision of a good air supply within the berth or section without subjecting the occupant to the direct action of the fan.

While, as above stated, the invention is especially adapted for use on railway trains, it is obvious that it can be used upon boats and in houses or other buildings. It will also be apparent that the details of construction and arrangement of the parts may be widely varied without departing from the spirit and scope of my invention as defined in the appended claims.

I claim—

1. The combination with an apartment or compartment wall, having a pocket or recess formed therein, said pocket or recess having means for permitting the ingress and egress of air, of a fan motor and fan mounted within said pocket or recess and normally inclosed therein, substantially as described.

2. The combination with an apartment or compartment-wall having a pocket or recess formed therein, said pocket or recess having means for permitting the ingress and egress of air, of a fan motor and fan mounted within said pocket or recess and normally inclosed therein, the mounting of the fan motor and fan having means for permitting the axial direction of the fan to be changed, and means external to the pocket or recess for controlling the operation of the fan motor and fan, substantially as described.

3. The combination with an apartment or compartment wall having a pocket or recess formed therein, said pocket or recess having means for permitting the ingress and egress of air, of a fan motor and fan mounted within said pocket or recess to swing into and out of the same, substantially as described.

4. The combination with an apartment or compartment wall having a pocket or recess formed therein, of a fan motor and fan mounted within said pocket or recess to

swing into and out of the same, together with means for controlling the fan motor, whereby it may be operated to drive the fan when the latter is either within or without said recess, substantially as described.

5. The combination with an apartment or compartment wall having a pocket or recess formed therein, said pocket or recess having means for permitting the ingress and egress of air, of a fan motor and fan mounted within said pocket or recess to swing into and out of the same, and means for securing the fan and motor in their outwardly swung position, substantially as described.

6. The combination with an apartment or compartment wall having a pocket or recess formed therein, of a fan motor and fan mounted within said pocket or recess to swing into and out of the same, and means for securing the fan and motor in their outwardly swung position, together with circuit connections for the motor whereby the fan may be operated either when within or when swung out of the pocket or recess, substantially as described.

7. The combination with an apartment or compartment wall, having a pocket or recess formed therein, of a fan motor and fan supported within said pocket or recess to swing out of and into the same, circuit connections for the motor, a set of switch contacts arranged to close the circuit of the motor when it is swung outwardly, and other switch contacts for closing the motor circuit to move the motor and fan in either direction while within the pocket, substantially as described.

8. The combination with an apartment or compartment wall having a pocket or recess formed therein, said pocket or recess having a hinged end wall, of a fan motor and fan secured to said hinged end wall and normally held within said pocket and said recess and pocket having an air inlet in addition to the opening which is normally closed by said end wall, substantially as described.

9. The combination with an apartment or compartment wall having a pocket or recess formed therein, said pocket or recess having a hinged end wall, of a fan motor and fan secured to said hinged end wall and normally held within said pocket, the connection between said end wall and the motor having means to permit angular adjustment of the fan, substantially as described.

10. The combination with an apartment or compartment wall, having a pocket or recess formed therein, of a fan motor and fan mounted within said pocket or recess and normally inclosed therein, said pocket or recess having air-circulating openings leading into and from the same, substantially as described.

In testimony whereof, I have hereunto set my hand.

ETHAN I. DODDS.

Witnesses:
R. A. BALDERSON,
H. M. CORWIN.