Jan. 22, 1935. L. R. MacLELLAN 1,988,627

SOCKET FIXTURE

Filed March 9, 1931 3 Sheets-Sheet 1

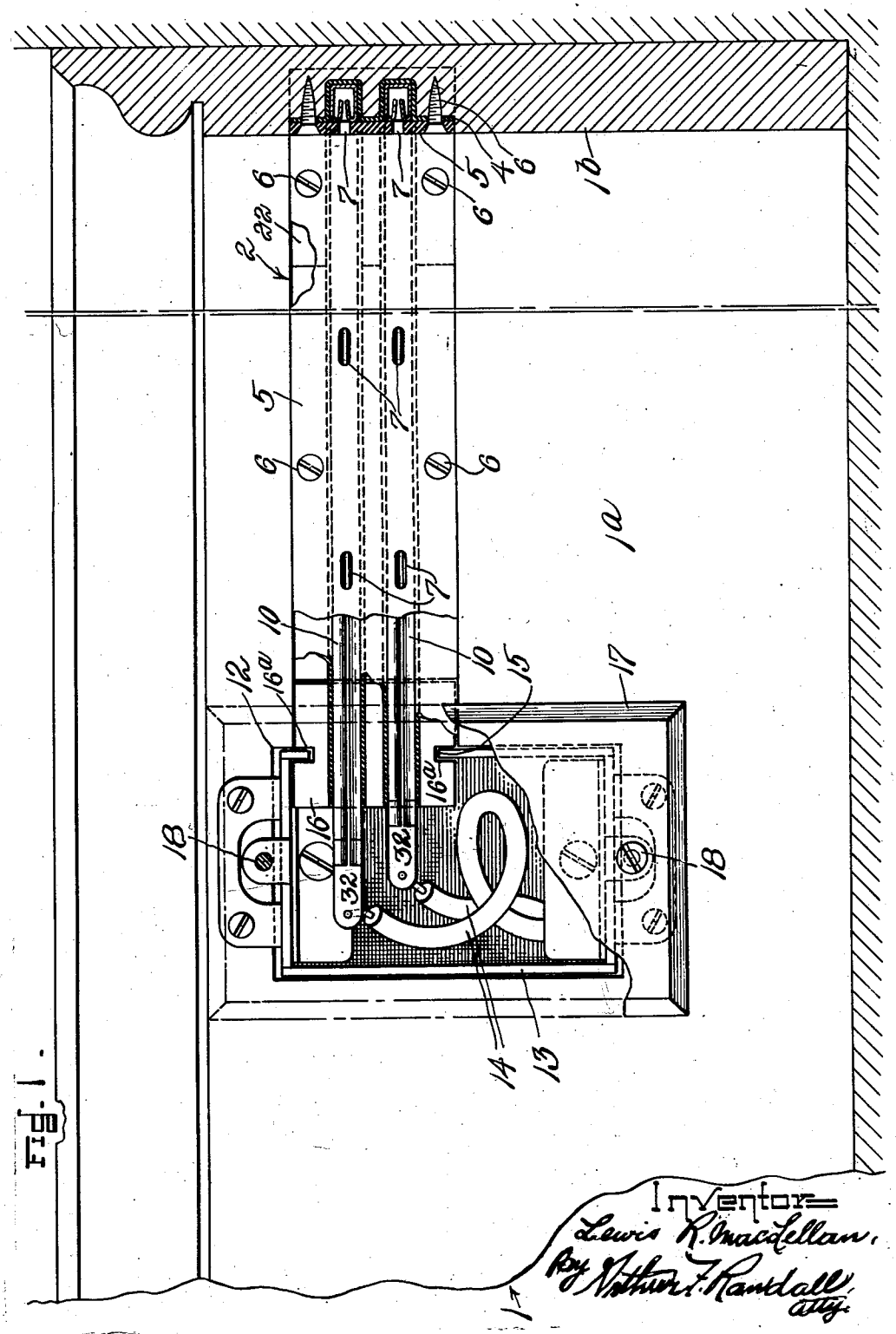

Fig. 1.

Inventor
Lewis R. MacLellan,
By Arthur F. Randall
Atty.

Jan. 22, 1935. L. R. MacLELLAN 1,988,627

SOCKET FIXTURE

Filed March 9, 1931 3 Sheets-Sheet 2

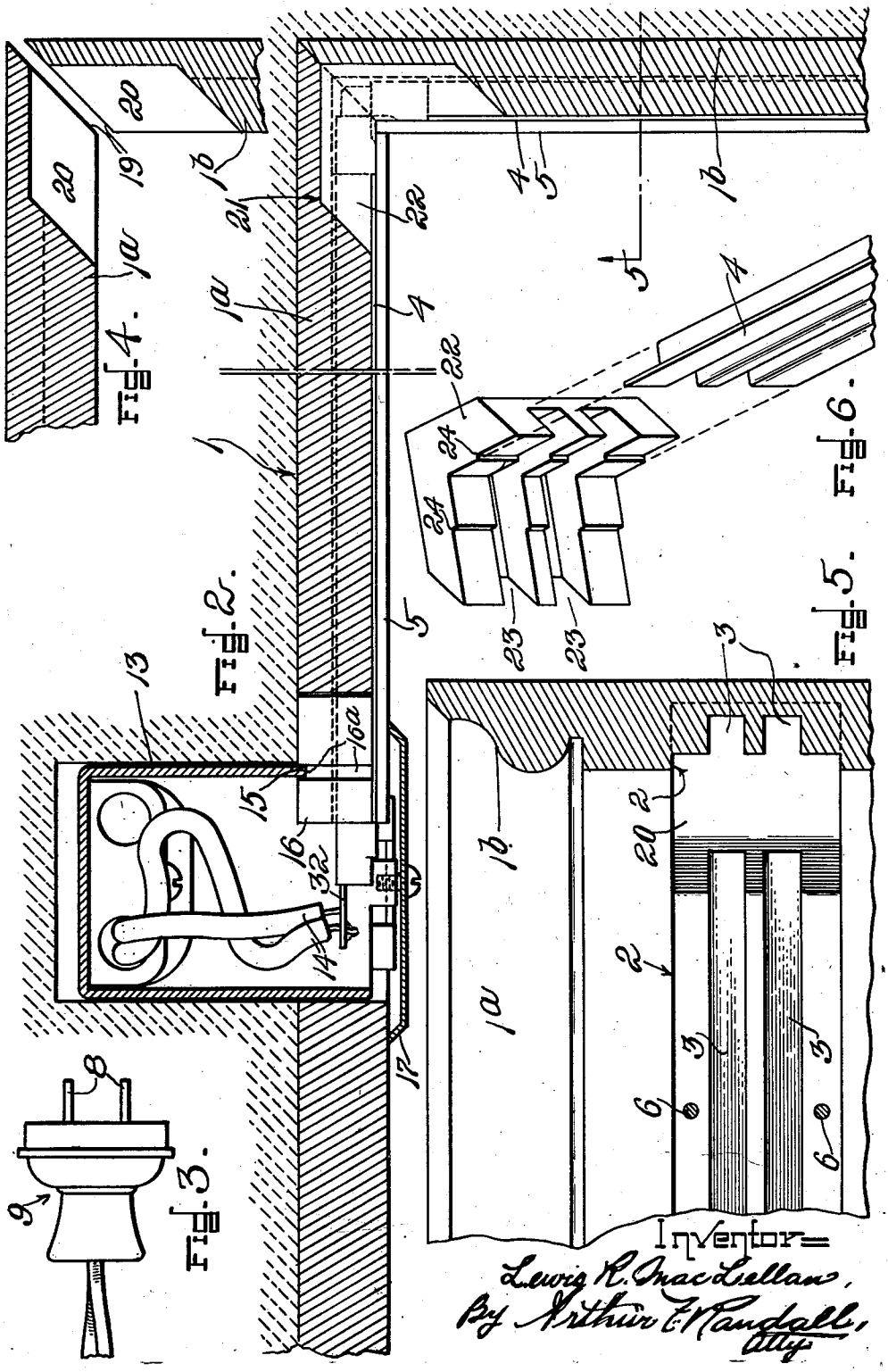

Jan. 22, 1935. L. R. MacLELLAN 1,988,627

SOCKET FIXTURE

Filed March 9, 1931 3 Sheets-Sheet 3

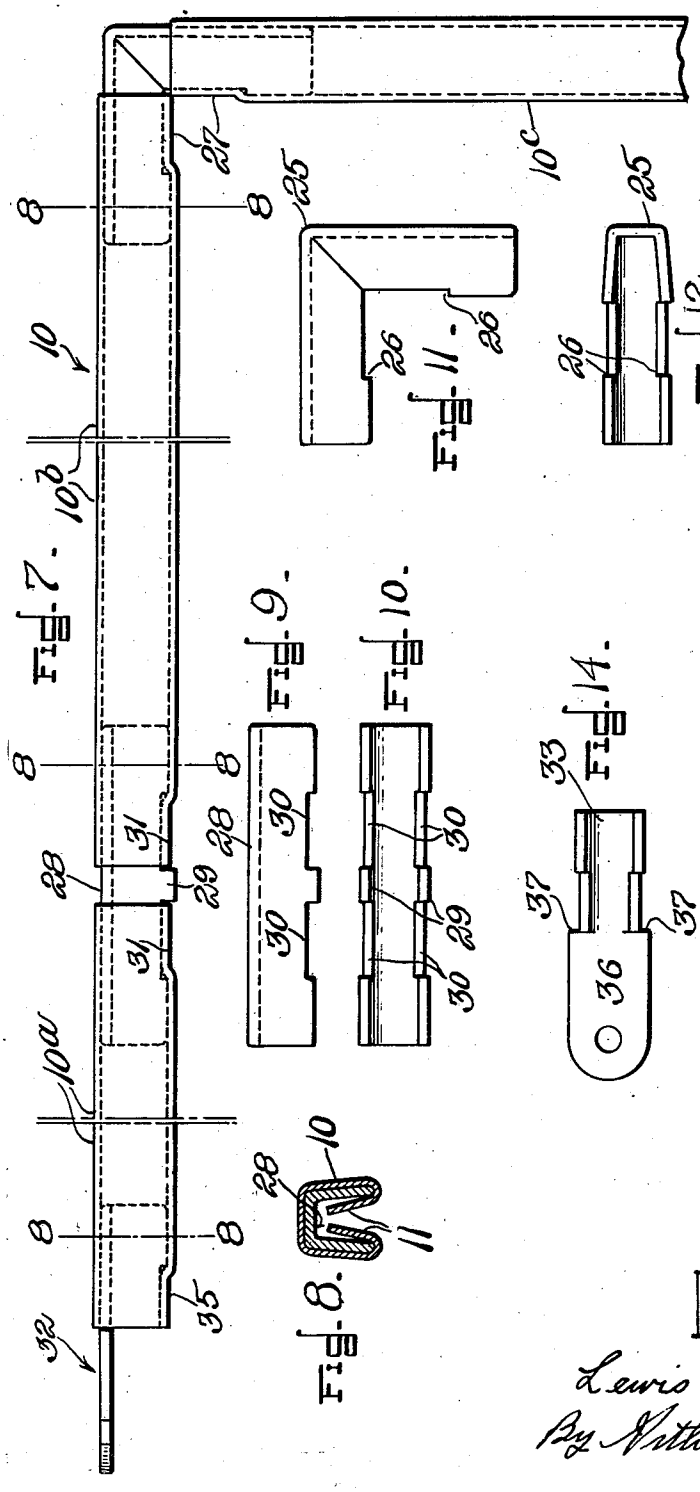

Fig. 7.

Fig. 11.

Fig. 12.

Fig. 9.

Fig. 10.

Fig. 14.

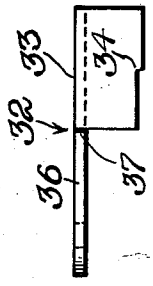

Fig. 13.

Fig. 8.

Inventor

Lewis R. MacLellan

By Arthur F. Randall

Atty

Patented Jan. 22, 1935 1,988,627

UNITED STATES PATENT OFFICE

1,988,627

SOCKET FIXTURE

Lewis Richard MacLellan, Quincy, Mass.

Application March 9, 1931, Serial No. 521,135

7 Claims. (Cl. 247—3)

My invention relates to electric distributing systems and more especially to wall socket fixtures for use in connecting one or more branch circuits with the main line conductors of an electric circuit.

The object of my invention is to provide a long socket fixture of the class referred to which will be of simple, inexpensive and efficient construction and into which the terminal plug of a branch circuit can be inserted at various points throughout the length thereof, or into which a plurality of terminal plugs can be inserted at different positions throughout the length of the fixture.

In its best form, my new socket fixture is constructed to receive and cooperate with terminal plugs of ordinary construction such as are in general use at the present time.

More especially the invention has for its object to provide an improved wall socket fixture of the type shown and described in my copending application Serial Number 488,366, filed October 13, 1930.

To these ends I have provided, as in the application referred to, a wall socket fixture comprising a long body member adapted to be attached to, or form part of, the wall of a room or the like. This body member is formed with a longitudinal groove or recess upon its outer side to receive within it a pair of fixed parallel metallic conductors, or bus-bars, which are supported, housed and shielded by said body, but which can be engaged at various points throughout their lengths with the contact prongs of an ordinary terminal plug, such as is provided at the end of the cord of an electric lamp or the like, when said contact prongs are inserted in the recessed portion of the body.

In accordance with the present invention each bus-bar is individually surrounded and fixedly supported by non-conducting material such as fibre, hard rubber or the like by which said bars are insulated from each other and from said body member, said non-conducting material occupying and closing the groove of said body member and being formed with accessible apertures opposite said bus-bars through which the prongs of a terminal plug may be passed into and out of engagement with said bus-bars at different points throughout the lengths of the latter.

In the preferred form of my invention the longitudinal groove of the body member is provided with a lining of insulating material having parallel grooves or channels within which the bus-bars are disposed, and a face plate or cover of insulating material is provided for the groove of the body member, said face plate or cover being fastened to the latter in any suitable manner. This face plate or cover is preferably formed at intervals throughout its length with pairs of short slots which register with the bus-bars and through which the prongs of a terminal plug may be passed to be separably engaged with the latter.

Thus, it is a feature of the present invention that the lining and face plate provide a pair of conduits of insulating material for the bus-bars which are thereby completely insulated from each other and from the body member, and are accessible only to the prongs of a terminal plug inserted in the apertures or small slots referred to.

In some forms of my invention the body member may be quite long and extend across a wall horizontally for a considerable distance, or it may extend entirely across said wall, or across more than one wall of a room. In either case the bus-bars may be, and preferably are, made up from a plurality of relatively short lengths or sections which are coupled together end to end to provide a relatively long continuous conductor and a feature of the invention resides in the construction of a sectional bus-bar, such as just described.

Another feature of my invention consists in providing an angular fixture of novel construction adapted to fit the angle or corner at the junction of two walls.

Still another feature of my invention resides in the construction of the ends of the bus-bars whereby they are adapted to be connected with the line wires of a circuit.

Other features of my invention are hereinafter pointed out.

In the accompanying drawings:—

Figure 1 is an elevation, partly in section, of the lower portions of two adjoining walls and the floor of a room provided with a base-board constructed in accordance with my invention.

Figure 2 is a sectional plan view of the construction illustrated in Figure 1.

Figure 3 is an elevation of an ordinary terminal plug such as may be used in connection with my new wall socket fixture.

Figure 4 illustrates the construction of the meeting end portions of the base-board sections at the corner of a room.

Figure 5 is a section on line 5 of Figure 2 with some of the parts removed.

Figure 6 is a perspective view of the grooved corner block hereinafter described, showing also an end portion of one of the lining strips hereinafter described.

Figure 7 is an enlarged plan view of a portion of one of the bus-bars shown in Figures 1 and 2.

Figure 8 is a section taken on either of the three lines 8—8 of Figure 7.

Figures 9 and 10 are enlarged plan and edge views, respectively, of one of the corner coupling members hereinafter described.

Figures 13 and 14 are plan and side views, respectively, of one of the bus-bar terminal members hereinafter described.

In the accompanying drawings I have embodied my invention in a base-board for the room of a building and said base-board constitutes the long body member, above referred to, of my improved wall socket fixture. This body member, indicated generally at 1, may be made from wood or any other appropriate material. Upon its outer side, and near its top, the base-board body member 1 is made throughout its length with a longitudinal groove 2, Figures 1 and 5, formed at its bottom with a pair of longitudinally disposed and parallel channels 3 separated by a partition.

Within the groove 2 and at the bottom thereof is provided a lining strip 4 of insulating material which extends from side to side of the groove 2 and which conforms to the shape of the bottom wall thereof so that it, also, is provided upon its outermost side with a pair of longitudinally disposed and parallel channels separated by a partition. The lining strip 4 is made from insulating material such as fibre, a phenolic condensation product or the like which is waterproof, and is molded to fit the shape of the bottom of the groove 2, said lining extending approximately from end to end of said groove.

Upon the lining strip 4 is seated a face plate or cover 5 of insulating material such as hard rubber, fibre, a phenolic condensation product or the like, and this face plate or cover is fastened in position within the groove 2 with its outer side flush with the surface of the base-board, by means of screws 6. At intervals throughout its length the face plate or cover is formed with pairs of short slots 7 adapted to permit the passage therethrough of the prongs 8, Figure 3, of an ordinary terminal plug 9.

Within each channel 3, between lining strip 4 and face plate 5 is arranged a bus-bar 10, Figure 1, which is of channel-iron form, or U-shape, in cross-section as shown in Figure 8 except that its opposite side marginal portions are turned inwardly to provide re-entrant resilient prong-gripping jaws 11 whose inner end portions are spaced apart a distance that is somewhat less than the thickness of the prongs 8, Figure 3. When the prongs 8 of the terminal plug 9 are pushed into a pair of slots 7 each prong is forced into position between the jaws 11 of one of the bus-bars 10. The jaws 11 are resilient so that when the prong 11 is fully in position between the same it is firmly gripped by said jaws so that the terminal plug 9 is held in position against the front of the face plate 5 by the bus bars.

At one end thereof the groove 2 communicates with a rectangular opening 12 provided through the baseboard 1 and within this opening is fixed a sheet metal junction box 13 into which the line wires 14 of an electric circuit are carried or extended. One of these line wires is connected with each of the bus-bars 10 and it will therefore be clear that when the prongs 8 of the terminal plug 9 are in engagement with the bus-bars 10 the branch circuit of the terminal plug is operatively connected with the main line wires 14 through the bus-bars.

One side wall of the junction box 13 is formed with a rectangular notch 15 within which is mounted a block insulating material 16 whose outer side is formed with a pair of channels which register with the channels 3 of the base-board. As shown in Figure 1, the lining strip 4 is extended across the outer side of the insulating block 16 so as to fit into the channels thereof. Also the adjacent end portion of the face plate 5 extends to the inner end of the insulating block 16 as shown in Figure 2.

The junction box 13 is provided with a cover 17 removably fastened in position against the outer side of the base-board by means of screws 18. Except for the notch 15 and insulating block 16 the junction box 13 is, or may be, constructed as usual.

The opposite sides and inner face of block 16 are formed with transverse grooves 16*a* into which the walls of notch 15 are slidably fitted.

At the corner of a room it is customary to make the base-board of two sections or strips 1*a* and 1*b* whose adjacent ends occupy abutting relationship and are beveled on an angle of 45° as shown at 19, Figure 4. The bottom wall of the groove 2 of each base-board section adjacent the beveled end of the latter is recessed from side to side thereof as at 20, Figure 4, and when the two base-board sections are arranged end to end as in Figure 2 these two recesses provide an angular pocket 21 for the reception of a molded angular corner block 22 of insulating material.

Upon its outer relatively perpendicular sides this corner block 22 is formed with parallel channels registering with the channels 3 of the base-board sections 1*a* and 1*b*. As shown in Figures 2 and 6 the opposite end portions or legs of the corner block 22 are cut away or stepped upon the outer sides thereof, as at 24, so as to under-lie the adjacent ends of the molded insulating strips 4. In this way the corner block 22 serves to close the joint between the abutted ends of the base-board sections 1*a* and 1*b* throughout the width of the groove 2 and by constructing the parts so that the insulating lining 4 overlaps the ends or arms of said corner block, the joints between said ends and the sections 1*a* and 1*b* are closed by said insulating lining.

As shown in Figure 7 each bus-bar 10 may be made from several sections 10*a*, 10*b* and 10*c*, the sections 10*a* and 10*b* being mounted within one of the channels of the base-board section 1*a*, and the bus-bar section 10*c* being mounted within the corresponding channel of the base-board section 1*b*. The two sections 10*b* and 10*c* extend to the middle of the corner block 22 and have their proximate ends connected by an angular coupling member 25 such as that illustrated in Figures 11 and 12.

This coupling member 25 is U-shaped in cross-section and one end thereof is fitted telescopically into the end of the bus-bar section 10*c* while the opposite end thereof is fitted telescopically into the end of the bus-bar section 10*b*. The intermediate portion of the coupling member 25 is made of less width than the end portions as shown in Figure 11 thereby providing

each arm of the coupling member with a pair of shoulders 26, Figure 12.

After the arms of the coupling member 25 have been fitted telescopically into the ends of the bus-bar sections, the end portions of the latter are crushed inwardly as at 27 thereby to permanently fasten each section of the bus-bar to its arm of the coupling member. In addition solder may be applied to this joint to connect each bus-bar section with the coupling member.

The proximate ends of the bus-bar sections 10*a* and 10*b* are connected by means of a straight coupling member 28 whose opposite end portions are fitted telescopically within the ends of the bus-bar sections 10*a* and 10*b*, with the ends of said sections abutting opposed shoulders at the opposite sides of lugs 29 provided at the middle of coupling member 28. The coupling member 28 is U-shaped in cross-section as shown in Figure 8 and the opposite sides thereof are formed with notches 30 into which the end portions of the bus-bar sections 10*a* and 10*b* are crushed as shown at 31, Figure 7, thereby to permanently connect the coupling member with the bus-bar sections. Solder may also be applied to this joint to strengthen the same and also improve the electrical connection between the parts.

The end of each bus-bar which projects into the junction box 13, Figure 1, may be provided with a terminal member 32 having a shank portion or body 33, Figures 13 and 14, that is U-shaped in cross-section and adapted to be fitted telescopically into the end of its bus-bar 10 as indicated in Figure 7. The outer part of the body 33 is made of less width than the inner end portion thereof so as to provide a shoulder 34, and after inserting the body portion of the terminal member 32 within the bus-bar, the end portion of the latter is crushed down behind the shoulder 34 as at 35, Figure 7, thereby permanently fastening the same in position.

The outer portion of the terminal member 32 is formed as an apertured tang 36 which is wider than the body 33 thereby providing shoulders 37 which position the bus-bar and terminal member relatively while being assembled. The connection, both electrical and mechanical, between the bus-bar 10 and terminal member 32 may be improved by means of solder applied to unite the two.

The ends of the line wires 14 are passed through the apertures of the terminal members 32, Figure 1, and secured to said members by means of solder.

What I claim is:

1. A wall socket fixture comprising a base-board body member formed upon its outer side with a longitudinal groove and also formed with an aperture at one end of said groove; a pair of long spaced-apart parallel prong-gripping bus-bars within said groove and extending longitudinally thereof; non-conducting waterproof material fixed within said groove and at the front thereof, said material surrounding each of said bus-bars individually so as to fixedly support said bus-bars in spaced-apart relationship throughout their lengths and also insulate said bars from each other and from said base-board body member, said non-conducting material being formed at its front with apertures opposite said bus-bars through which the prongs of a terminal plug may be passed into and out of engagement with said prong-gripping bus-bars at different points throughout the length of the latter; a junction box fixed in position within the aperture of said base-board body member and into which proximate ends of said bus-bars extend, said junction box being made from metal and one side thereof being constituted in part by a block of insulating material formed upon one side thereof with grooves occupied by said bus-bars, and circuit line wires within said junction box connected with the said proximate ends of said bus-bars.

2. A wall socket fixture constructed in accordance with claim 1 wherein a side wall of said junction box is made with a notch disposed opposite the groove of said base-board body member, said notch having parallel oppositely disposed side walls, and wherein said block of insulating material occupies said notch and is provided at its opposite sides with grooves within which said oppositely disposed side walls of said notch are slidably and separably fitted.

3. A wall socket fixture comprising a base-board body member consisting of two relatively perpendicular base-board sections whose ends abut, said sections being formed upon their outer sides with longitudinal registering grooves whose proximate end portions are recessed to provide an angular pocket; an angular grooved corner block closely confined within said pocket and formed upon its outside with parallel grooves registering with the grooves of said sections; a pair of long angular spaced-apart parallel prong-gripping bus-bars within the grooves of said corner block and occupying the grooves of said sections, and non-conducting material fixed within the grooves of said sections and surrounding each of said bus-bars individually so as to fixedly support said bars in spaced-apart relationship throughout the major portions of their lengths and so as to also insulate said bars from each other and from said sections, said non-conducting material being formed at its front with apertures opposite said bus-bars through which the prongs of a terminal plug may be passed into and out of engagement with said prong-gripping bus-bars at different points throughout the lengths of the latter.

4. In a device of the character described a prong gripping bus bar comprising two sections disposed end to end, each of said bus bar sections being U-shaped in cross section, and an angular coupling member telescopically associated with said sections, each arm of which is U-shaped in cross section and has its end portion made of greater width than its inner portion and wherein the material of the end portion of its bus bar section is contracted behind said end portion of greater width thereby to positively lock said arm within its section.

5. In a device of the character described a prong-gripping bus-bar comprising a plurality of sections alined end to end and each made U-shaped in cross-section, and a straight coupling member made U-shaped in cross-section and having its opposite end portions telescopically fitted within the proximate ends of two of said sections, each of said end portions being made wider adjacent its extremity than near the middle of said member and the end portion of its bus-bar section being contracted behind said wider portion thereby to positively lock the two together.

6. In a device of the character described a prong-gripping bus-bar constructed in accordance with claim 5 wherein said coupling member is made adjacent its middle with a pair

of opposed stop shoulders for engaging the ends of said bus-bar sections.

7. In a device of the character described a prong-gripping bus-bar that is U-shaped in cross-section and a terminal member for said bus-bar having a body portion that is U-shaped in cross-section and telescopically fitted into one end of said bus-bar, the inner portion of said body being of greater width than the outer portion thereof and the end portion of said bus-bar being contracted behind said wider end portion thereby to positively lock said body portion within the end of said bus-bar, the said terminal member being formed with a shoulder to limit the movement of said body portion into the end of said bus-bar.

LEWIS RICHARD MacLELLAN.