Aug. 9, 1938. L. A. MORRIS 2,126,654

PNEUMATIC FOOT FOR ARTIFICIAL LIMBS

Filed Jan. 19, 1937

Fig. 1.

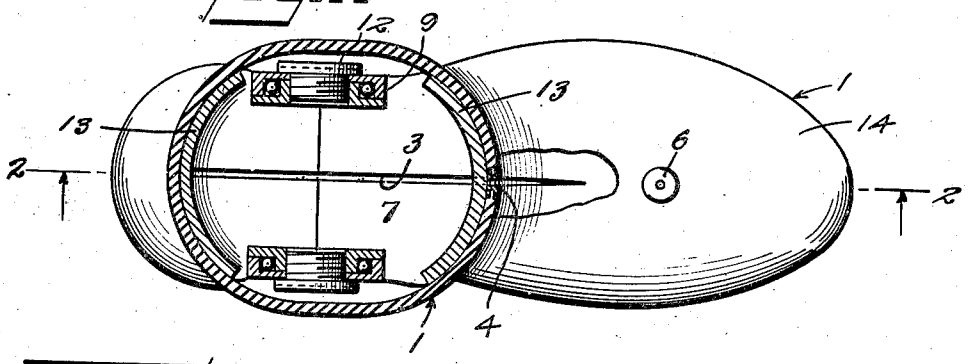


Fig. 2.

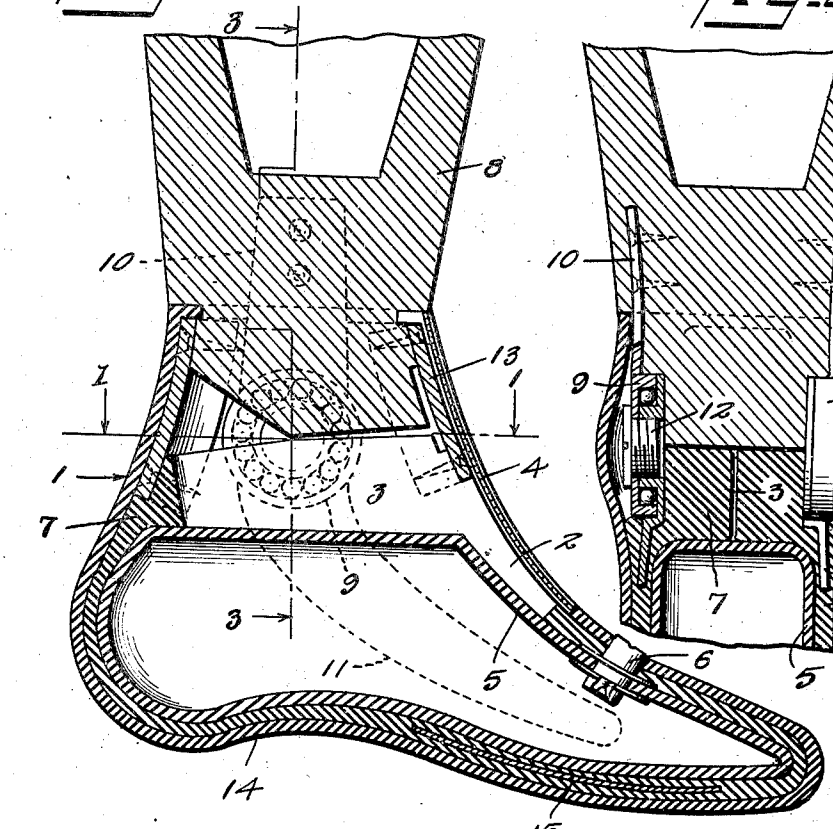


Fig. 3.




L. A. Morris

INVENTOR

BY Victor J. Evans & Co.

ATTORNEY

Patented Aug. 9, 1938 2,126,654

# UNITED STATES PATENT OFFICE

2,126,654

## PNEUMATIC FOOT FOR ARTIFICIAL LIMBS

Lonnis Austin Morris, Thayer, Mo.

Application January 19, 1937, Serial No. 121,369

3 Claims. (Cl. 3—8)

This invention relates to artificial limbs and more particularly to an artificial foot including an ankle portion which may be easily connected to a leg portion and has for the primary object the provision of a pneumatically cushioned foot portion which will effectively absorb shocks and jars and which will simulate a real foot both as to shape and action.

Another object of this invention is the provision of a hinge construction included in the ankle portion which will provide to the latter natural ankle action.

With these and other objects in view, this invention consists in certain novel features of construction, combination and arrangement of parts to be hereinafter more fully described and claimed.

For a complete understanding of my invention, reference is to be had to the following description and accompanying drawing, in which

Figure 1 is a horizontal sectional view taken on the line 1—1 of Figure 2, showing an artificial foot constructed in accordance with my invention.

Figure 2 is a vertical sectional view taken on the line 2—2 of Figure 1.

Figure 3 is a fragmentary transverse sectional view illustrating the ankle construction.

Referring in detail to the drawing, the numeral 1 indicates an artificial foot, including an ankle construction, heel, instep and toe portions. The ankle construction and said portions cooperate in simulating a natural foot and ankle having natural actions. The artificial foot 1 is constructed from a casing 2 having a slot or opening 3 therein. A chamber is formed in the casing and receives therein by way of the slot or opening an inflatable inner tube 5 provided with an inflating valve 6 of any desired construction and which extends through an opening in the casing 2 so that the inner tube may be inflated to any desired air pressure. The casing 2 is preferably constructed of rubber and fabric while the inner tube is of rubber so that it may readily expand. The casing 2 includes a solid portion 7 in which the slot or opening 3 is formed and forms a part of the ankle portion of the artificial foot. The casing 2 adjacent the solid portion 7 is chambered to receive a leg portion 8. The leg portion is connected to the casing 2 by hinges 9. The hinges 9 each are of the ball bearing type and include attaching portions 10 and 11. The attaching portions 10 are suitably secured to the leg portion 8 while the attaching portions 11 are slightly curved and embedded in the material of the casing 2 and are preferably constructed of steel or similar material. Each hinge 9 may be readily disassembled by the removing of a screw threaded bolt or pin 12 which will permit the artificial foot to be readily disconnected from the leg portion 8. Connected to the casing 2 and to the leg portion 8 are elastic strips 13 aiding in maintaining the foot portion in proper relation to the leg portion and permitting by cooperating with the hinges 9 a natural ankle action between the artificial foot and the leg. Suitable covering 14 is placed over the artificial foot and has a slit therein normally closed by a fastener 4 preferably in the form of a zipper so that the casing may be opened and closed and when opened permits the easy removal and replacement of the inflatable inner tube 5. The inflating valve 6 also extends through the covering 14. The covering may be of any selected material, preferably rubber.

A spring element 15 is embedded in the bottom of the casing 2 and extends from the instep portion to the toe portion, as shown in the drawing, to give a desired strength and resiliency to the toe portion.

A person wearing an artificial foot of the character described and shown in the drawing will receive therefrom maximum comfort and near as possible natural foot and ankle action. The pneumatic cushion formed in the foot portion will absorb shocks and jars to prevent such from being transmitted to the leg stump of the person so that the device can be worn over long periods of time with maximum comfort and maximum ease of walking action. The hinges described in the ankle construction along with the elastic strips permit the artificial foot to have as near as possible natural ankle action. Further, it is to be noted that the arrangement of the covering 14 is such that the artificial foot including the heel, instep and toe portions and ankle construction are protected and gives to the general contour of the device a simulation of a natural foot and ankle.

Having described the invention, I claim:

1. An artificial foot comprising a casing having a chamber, an inflatable tube in said chamber, said casing simulating a foot portion and an ankle portion, said ankle portion being chambered to receive an artificial leg, means for connecting the casing to the leg portion, tension means for keeping the foot portion in proper relation to the leg portion, and a covering for the foot and ankle portions and having a slot provid-

ed with a separable fastener for opening and closing the slot.

2. An artificial foot and ankle construction including a leg portion, a casing shaped to simulate a human foot having heel, instep and toe portions and provided with a chamber extending into said toe, instep and heel portions, said heel portion having thickened portions providing a slot extending into the chamber to permit opening of the latter by the flexing of said thickened portions away from each other, an inflatable inner tube in said chamber and insertible and removable therefrom by way of the slot, and means connecting the casing to the leg portion.

3. An artificial foot and ankle construction including a leg portion, a casing shaped to simulate a human foot having heel, instep and toe portions and provided with a chamber extending into said toe, instep and heel portions, said heel portion having thickened portions providing a slot extending into the chamber to permit opening of the latter by the flexing of said thickened portions away from each other, an inflatable inner tube in said chamber and insertible and removable therefrom by way of the slot, oppositely disposed hinges connecting said leg portion and the casing, and oppositely disposed elastic strips connecting the leg portion and the casing.

LONNIS AUSTIN MORRIS.