Jan. 11, 1966 D. R. TROPE 3,228,821

VENTED WATERPROOF FABRIC

Filed April 12, 1962

FIG. 1.

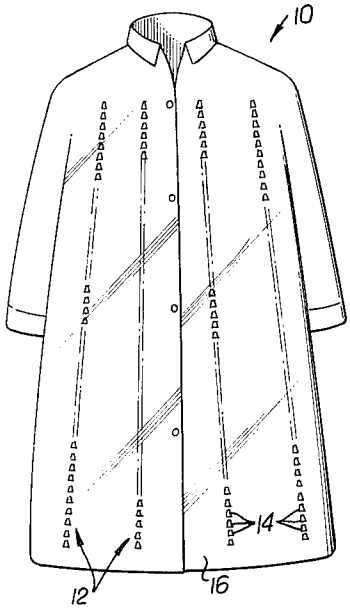

FIG. 2.

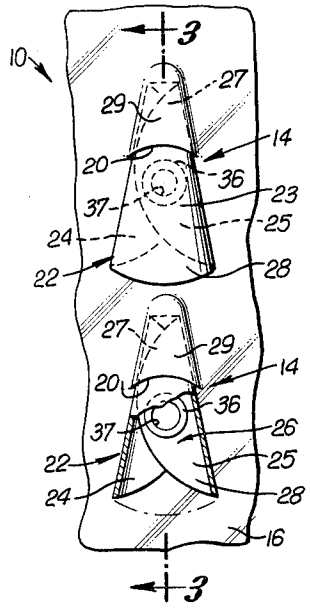

FIG. 3.

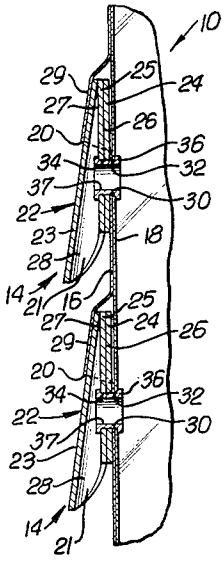

FIG. 4.

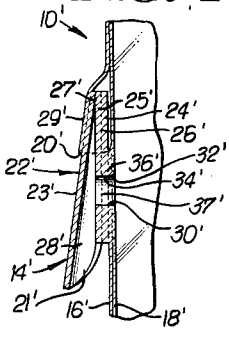

FIG. 5.

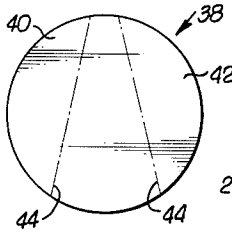

FIG. 6.

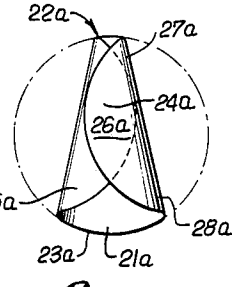

FIG. 7.

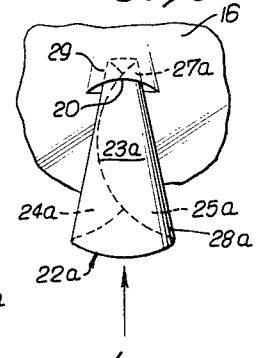

FIG. 8.

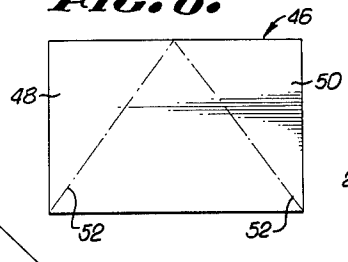

FIG. 9.

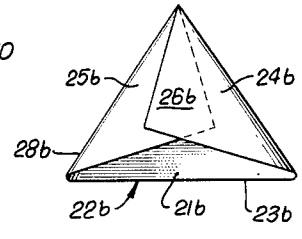

FIG. 10.

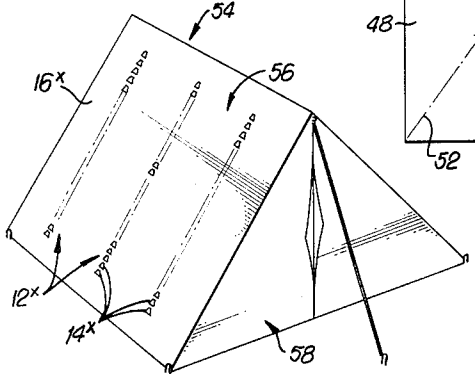

INVENTOR.
DAVIDA RUTH TROPE
BY Sidney G. Klein
AGENT.

United States Patent Office 3,228,821 Patented Jan. 11, 1966

3,228,821

VENTED WATERPROOF FABRIC

Davida Ruth Trope, 365 Norcroft Ave., Los Angeles, Calif.

Filed Apr. 12, 1962, Ser. No. 187,126
14 Claims. (Cl. 161—112)

The present invention relates to waterproof fabrics, and more particularly to such fabrics which are provided with vents.

Waterproof fabrics are well-known in the prior art, and have been formed from rubber, waterproof plastics, waterproof resin-impregnated materials, or other suitable waterproof materials. The waterproof materials employed, however, have presented a major disadvantage in use, due to their lack of porosity, and consequent inability to "breathe" (i.e., to permit the free flow of gases therethrough). Such lack of porosity has proved to be especially disadvantageous when the fabric formed has been used for raincoats or other wearing apparel. Discomfort to the wearer has then been commonly encountered, as has been mildew formation within the fabric.

In some instances, the known waterproof fabrics have been provided with vents in order to overcome the above-mentioned disadvantages. The vented waterproof fabrics known in the prior art have, however, usually been unduly heavy in weight. Furthermore, they have often been of quite complicated structure. Also, they have usually been comparatively costly to produce. In addition, such known fabrics have presented serious design limitations, in respect of possible variation in the arrangement of the vents in the fabric.

It is therefore an object of the present invention to provide an improved vented waterproof fabric.

Another object of the invention is to provide a vented waterproof fabric of unusually light weight.

Another object of the present invention is to provide a vented waterproof fabric which is of comparatively simple structure.

Another object of the invention is to provide a vented waterproof fabric of unusally low cost.

Another object of the present invention is to provide a vented waterproof fabric which is comparatively free from design limitations.

Another object of the invention is to provide improved vented wterproof wearing apparel.

These and other objects of the invention will become more apparent from the following description thereof, read in conjunction with the accompanying drawings, in which:

FIG. 1 is a front elevation, being somewhat diagrammatic, of a raincoat constructed in accordance with the invention;

FIG. 2 is an enlarged front elevation of a portion of the raincoat of FIG. 1, being partly in section;

FIG. 3 is a vertical section taken along the lines 3—3 of FIG. 2;

FIG. 4 is a view similar to FIG. 3, but illustrating another embodiment of the invention;

FIG. 5 is a top plan of a blank employable in constructing an insert member in accordance with the invention;

FIG. 6 is a top plan of an insert member formed from the blank of FIG. 5;

FIG. 7 is a diagrammatic view illustrating the use of the insert member of FIG. 6, in constructing fabric in accordance with the invention;

FIG. 8 is a view similar to FIG. 5, but of a blank of modified shape;

FIG. 9 is a view similar to FIG. 6, but of an insert member formed from the blank of FIG. 8; and

FIG. 10 is a view in perspective, being somewhat diagrammatic, of a tent constructed in accordance with the invention.

Referring to the drawings, and particularly to FIG. 1, a raincoat **10** is shown, which is generally of conventional design, apart from the provision therein of a plurality of vertically-extending and horizontally-spaced-apart rows **12** (four being shown) of vent structures **14** (see also FIG. 2). As best seen in FIG. 3, the raincoat **10** is constructed of two similar adjacently-positioned sheets **16** and **18**, which serve as outer and inner fabric component sheets, respectively. The sheets **16** and **18** are of conventional flexible waterproof material suitable for fabric use. Rubber, a flexible waterproof plastic or other similar material may be utilized. Plastic in calendered sheet form (e.g., of vinyl or polyethylene type) may be employed. Also employable are woven or knitted sheets (e.g., of cotton or wool), which have been rendered waterproof by coating or impregnation thereof in conventional manner, with a plastic or other suitable material. Said sheets **16** and **18** may be of any desired thickness, and may be secured together by conventional means (not shown), such as, e.g., stitching.

A generally-horizontally-extending elongate incision, or slit **20** cut through the outer sheet **16** is provided at each vent structure **14**. Each of the latter includes a hollow, generally oblong vent cover **22**, open at one end to form an orifice **21**, as will be described more fully hereinbelow. Each vent cover **22** is constructed of flexible waterproof sheet material of the same type as employed for the sheets **16** and **18**, but being preferably of comparatively great thickness (e.g., twice the thickness of either of the latter sheets). Each of the vent covers **22** is formed of a front wall **23**, which is normally substantially flat, and two wings **24** and **25** rearwardly curving from the opposite sides of said front wall **23**, respectively. The wings **24** and **25** overlap, and are sealed together by a suitable glue to form a rear wall **26** which is spaced-apart from the front wall **23**. The seal is preferably effected over all of the interface between said wings **24** and **25**. Sealing together of the wings **24** and **25** in other conventional manner (e.g., by a heat seal as described hereinbelow) may, alternatively, be effected.

Each vent cover **22** is of tapered form, including a comparatively slender inner end portion **27** lying inserted through the associated slit **20** and between the sheets **16** and **18**; and a comparatively broad lower or outer end portion **28** projecting from said slit **20**. It will be noted that at the area of insertion of each of the inner end portions **27**, an outwardly-extending flap **29** is formed in the outer sheet **16**. The inner end portion **27** of each vent cover **22** is sealed at the front wall **23** thereof to the adjacent flap **29**, by a suitable glue. Sealing in other conventional manner here, again, may, alternatively, be effected. As a result of the manner of construction of the vent cover **22**, the orifice **21** is formed in the rear wall **26** and adjacent the distal end of the outer end portion **28**, said orifice **21** being covered by the front wall **23**.

The outer sheet **16** is formed with a circular opening **30** therethrough, located a short distance below each of the slits **20**. The inner sheet **18** is likewise provided with a circular opening **32** registering with each of the openings **30**. The rear wall **26** of each of the vent covers **22** is provided with a circular opening **34**, wihch registers with the adjacent registering openings **30** and **32** in the sheets **16** and **18**. It will be seen that each set of registering openings **30**, **32** and **34** is located intermediate the corresponding slit **20** and orifice **21**. A circular grommet **36**, of conventional construction, is associated with each vent cover **22**. Each grommet **36** may be of metal, a rigid light weight plastic (e.g., nylon), or other similar material.

Each of the grommets **36** extends through the opening **34** in the rear wall **26** of the associated vent cover **22**, and also through the openings **30** and **32** registering with said opening **34**. Each grommet **36** in conventional manner seals together the associated rear wall **26** and the sheets **16** and **18**. Each grommet **36**, in cooperation with the openings **30**, **32** and **34**, at the same time provides a vent **37** for the raincoat **10**.

As may be seen, the rear wall **26** of each vent cover **22** lies in a generally vertical position when the raincoat **10** is in use. Each front wall **23** then assumes a position of downward and outward inclination from said rear wall **26**.

It will be obvious that air or other gas may pass through the orifice **21** of each vent cover **22** and into the outer end portion **28**; and thence through the associated vent **37** to the interior of the raincoat **10**. Gases may also, of course, pass in the reverse direction. At the same time, any water or other liquid which comes onto the outer sheet **16** of the raincoat **10** cannot enter any of the vents **37**, due to the construction of the flaps **29** and the vent covers **22**. Such liquid will merely be directed downward over the flaps **29** and walls **23**, and off the outer end portions **28** of the vent covers **22**.

As has been previously indicated, the thickness of the sheet material of which each of the vent covers **22** is constructed is preferably greater than that of either of the sheets **16** and **18**. The vent covers **22**, as a result, are comparatively rigid, and tend to maintain their shape as shown. As a consequence, the desired passage of gases therethrough is assured.

As a result of the multiple layers of material present in the area of each flap **29**, and the comparatively great thickness of said layers of material as taken together, a ribbing effect is produced at each of said flaps **29**. Such ribbing effect serves to increase the strength of the vent structures **14**, and also has decorative value.

Referring to FIG. 4, a portion of vented waterproof fabric **10'** is shown, being constructed of outer and inner fabric component sheets **16'** and **18'** of flexible waterproof material, corresponding respectively to the sheets **16** and **18** of the raincoat **10**. The waterproof material here employed is heat-sealable (being, e.g., of plastic of the vinyl type). The fabric **10'** includes a vent structure **14'** similar to the vent structure **14** of FIGS. 1–3. Thus, the outer sheet **16'** is provided with a generally horizontally-extending slit **20'**. A hollow, generally oblong vent cover **22'** of heat-sealable flexible waterproof material and similar in structure to the vent cover **22** of FIGS. 1–3, lies inserted at its upper or inner end portion **27'** through the slit **20'**. The vent cover **22'** at its lower or outer end portion **28'** projects from said slit **20'**, providing an orifice **21'**. The inner end portion **27'** of the vent cover **22'** is, at the front wall **23'**, heat sealed to the adjacent flap **29'**, and thus fused together therewith.

The rear wall **26'** of the vent cover **22'** is formed by overlapping wings **24'** and **25'**, which are fused together by a heat seal. The rear wall **26'**, and the sheets **16'** and **18'** are heat sealed together, as shown at **36'**. The seal at **36'** is located a short distance below the slit **20'**. Circular openings **30'**, **32'** and **34'** are formed in the sheets **16'** and **18'** and the rear wall **26'**, respectively, at the seal **36'**. Said openings **30'**, **32'** and **34'** register with one another to form a vent **37'**.

The vent structure **14'** provides the same advantages in use as discussed above in the case of the vent structure **14** of FIGS. 1–3. Thus, air or other gas may freely pass in either direction through the orifice **21'** of the vent cover **22'**, and through the vent **37'**. However, water or other liquid may not enter the vent **37'**.

Each of the vent covers **22** or **22'** may be formed from a flat blank of suitable flexible waterproof sheet material, such as the circular blank **38** shown in FIG. 5. The blank **38** has two opposite side portions **40** and **42**, which may be folded manually, or by conventional mechanical means, along a pair of fold lines **44** located there-

between and inclined toward one another, so as to form overlapping wings **24***a* and **25***a*, respectively (see FIG. 6). The overlapping wings **24***a* and **25***a* may then be sealed together by gluing (as illustrated in the case of the vent cover **22**); by heat sealing (as illustrated in the case of the vent cover **22'**); or in other conventional manner, so as to form a wall **26***a*. A hollow, generally oblong insert member **22***a*, having a front wall **23***a* and said wall **26***a* as a rear wall, is thus produced. Due to the inclination of the fold lines **44**, and the overlapped construction of the wings **24***a* and **25***a*, the insert member **22***a* is tapered. Said insert member **22***a* thus has a slender end portion **27***a*, and a broad end portion **28***a*, the latter being formed at its distal end with an orifice **21***a*.

The member **22***a* is adapted for insertion through one of the slits **20** of the outer sheet **16** of the raincoat **10** of FIGS. 1–3, as illustrated diagrammatically in FIG. 7. Following such insertion, the inner end portion **27***a* of the member **22***a* may be sealed at the front wall **23***a* to the adjacent flap **29** by gluing, or in other conventional manner. The front wall **23***a* may then be lifted; and three registering openings (such as the openings **30**, **32** and **34** seen in FIG. 3) then formed in the rear wall **26***a* and the inner and outer sheets **16** and **18**, respectively. A grommet, such as the grommet **36** seen in FIGS. 2–3, may then be inserted through said registering openings. A vent structure **14** will thus be produced. The steps here described for the production of the vent structure **14**, employing the insert member **22***a*, may be accomplished manually, or by conventional mechanical means.

The insert member **22***a*, when formed of a suitable heat-sealable material, is likewise adapted for insertion through the slit **20'** of the outer sheet **16'** of the fabric **10'** of FIG. 4. Following such insertion (not illustrated), the inner end portion **27***a* may then be heat sealed at the front wall **23***a* to the adjacent flap **29'**. Thereafter, the front wall **23***a* may be lifted; the rear wall **26***a* and sheets **16'** and **18'** fused together to form a seal, such as seen at **36'** in FIG. 4; and openings **30'**, **32'** and **34'** (such as seen in FIG. 4) then formed in the rear wall **26***a* and the sheets **16'** and **18'**, respectively. Alternatively, the openings **30'**, **32'** and **34'** may be formed prior to the sealing together at **36'**. The vent **14'** will thus be produced. Here, again, the production of the latter may be accomplished manually, or by conventional mechanical means.

Referring to FIG. 8, a blank **46** of flexible waterproof material is shown, similar to the blank **38** of FIG. 5, but being rectangular in shape. The blank **46** has opposite side portions **48** and **50** which may be folded along fold lines **52** which are inclined toward one another, and intersect. Overlapping wings **24***b* and **25***b* (see FIG. 9) are consequently formed. The latter, when sealed together in a manner such as described above, provide a wall **26***b*. A hollow, tapered insert member **22***b* is thus produced, having said wall **26***b* as a rear wall; and having a triangular front wall **23***b*. The broad end portion **28***b* of the insert member **22***b*, as may be seen, is formed adjacent its distal end and at the rear wall **26***b* with an orifice **21***b*. The insert member **22***b* may be used for vent cover purposes in the same manner as the insert member **22***a*.

It will be realized that the vent cover **22** or **22'** may be formed in accordance with the procedure described above, from a blank of flexible waterproof sheet material which is of other shape than shown in FIG. 5 or FIG. 8. The vent cover **22** or **22'**, furthermore, may be of any suitable shape, and produced by means other than here described. Also, the vent **37** or **37'** may be of any suitable shape other than shown.

Referring to FIG. 10, a tent **54** embodying the invention is shown. The tent **54** is of convenitonal shape, and constructed of flexible waterproof sheet material, such as, e.g., canvas. The opposite side walls **56** of the tent **54** (only one being seen) are each composed of two adjacently-positioned sheets (only the outer sheet **16***x* being

seen). Each of the walls **56** is provided with a plurality of rows **12***x* (three being shown) of vent structures **14***x*, identical to the vent structures **14** of the raincoat **10** of FIGS. 1–3; or to the vent structure **14'** of the fabric **10'** of FIG. 4. If desired, each of the end walls **58** (only one being seen) of the tent **54** might also be provided with rows **12***x* of vent structures **14***x*.

The tent **54** offers the same advantages in respect of waterproofing, accompanied by "breathing," as described with regard to the raincoat **10** and fabric **10'**.

In addition to its uses illustrated in FIGS. 1–10, it will be realized that the vented waterproof fabric of the invention may be employed for many other purposes in which waterproofing is required, and "breathing" of the waterproofing material is desired (e.g., for tarpaulins). It will also be realized that as many or as few vent structures **14** or **14'** as desired may be utilized. Furthermore, the vent structures **14** and **14'** may be of any suitable size, and may be arranged in other patterns than as shown. For example, a circular pattern may be desired.

The fabric of the invention, it will be noted, provides adequate waterproofing accompanied by venting; and at the same time, is of unusually light weight and comparatively simple structure. Also, it may be constructed at comparatively low cost. In addition, it provides an unusual degree of freedom from design limitations.

Although the invention has been described with reference to particular embodiments thereof, it will be realized that various changes and modifications may be made therein, without departing from the spirit of the invention or the scope of the appended claims.

What is claimed and desired to be protected by Letters Patent is as follows:

1. A vented waterproof fabric, comprising two adjacently-positioned sheets of flexible waterproof material adapted to serve as inner and outer fabric component sheets, respectively, said outer sheet being formed with an elongate incision, and a flexible waterproof vent cover of hollow formation and including a front wall and a rear wall, said vent cover having an inner end portion lying inserted through said incision and between said sheets, said inner end portion being sealed at said front wall to said outer sheet, said vent cover having an outer end portion projecting from said incision and being formed with an orifice in said rear wall and covered by said front wall, said outer end portion of said vent cover at said rear wall and said sheets being formed with three openings, respectively, said openings being located intermediate said incision and said orifice and registering one with the other, said outer end portion and said sheets being sealed together adjacent said registering openings, said vent cover being adapted for the passage of gas between said orifice and said openings.

2. A vented waterproof fabric in accordance with claim **1**, said sheets and said vent cover being of plastic material.

3. A vented waterproof fabric in accordance with claim **1**, said inner end portion being glued to said outer sheet.

4. A vented waterproof fabric in accordance with claim **1**, said inner end portion being fused together with said outer sheet.

5. A vented waterproof fabric, comprising two adjacently-positioned sheets of flexible waterproof material adapted to serve as inner and outer fabric component sheets, respectively, said outer sheet being formed with an elongate incision and an opening adjacent said incision, said inner sheet being formed with an opening registering with said opening in said outer sheet, and a flexible waterproof vent cover of hollow formation and including a front wall and a rear wall, said vent cover having an inner end portion lying inserted through said incision and between said sheets, said inner end portion being sealed at said front wall to said outer sheet, said vent cover having an outer end portion projecting from said incision and being formed with an orifice in said rear wall and covered by said front wall, said outer end portion of said vent cover at said rear wall being formed with an opening registering with said openings in said sheets, said registering openings being located intermediate said incision and said orifice, said outer end portion and said sheets being sealed together adjacent said registering openings, said vent cover being adapted for the passage of gas between said orifice and said openings.

6. A vented waterproof fabric, comprising two adjacently-positioned sheets of flexible waterproof material adapted to serve as inner and outer fabric component sheets, respectively, said outer sheet being formed with an elongate incision, and a flexible waterproof vent cover including a front wall and a rear wall, said vent cover having an inner end portion lying inserted through said incision and between said sheets, said inner end portion being sealed at said front wall to said outer sheet, said vent cover having an outer end portion projecting from said incision and being formed with an orifice in said rear wall and covered by said front wall, said outer end portion of said vent cover at said rear wall and said sheets being formed with three openings, respectively, said openings being located intermediate said incision and said orifice and registering one with the other, said rear wall and said sheets being sealed together adjacent said registering openings, said front and rear walls of said vent cover being spaced-apart for the passage of gas between said orifice and said openings.

7. A vented waterproof fabric, comprising two adjacently-positioned sheets of flexible waterproof material adapted to serve as inner and outer fabric component sheets, respectively, said outer sheet being formed with an elongate incision, and a flexible waterproof vent cover of hollow formation and including a front wall and a rear wall, said vent cover having an inner end portion lying inserted through said incision and between said sheets, said inner end portion being sealed at said front wall to said outer sheet, said vent cover having an outer end portion projecting from said incision and being formed with an orifice in said rear wall and covered by said front wall, said outer end portion of said vent cover at said rear wall and said sheets being formed with three openings, respectively, said openings being located intermediate said incision and said orifice and registering one with the other, and a grommet extending through said registering openings and sealing together said outer end portion and said sheets, said grommet being adapted for the passage of gas therethrough, said vent cover being adapted for the passage of gas between said orifice and said grommet.

8. A vented waterproof fabric in accordance with claim **7**, in which said grommet is of plastic material.

9. A vented waterproof fabric, comprising two adjacently-positioned sheets of flexible waterproof material adapted to serve as inner and outer fabric component sheets, respectively, said outer sheet being formed with an elongate incision, and a flexible waterproof vent cover of hollow formation and including a front wall and a rear wall, said vent cover having an inner end portion lying inserted through said incision and between said sheets, said inner end portion being sealed at said front wall to said outer sheet, said vent cover having an outer end portion projecting from said incision and being formed with an orifice in said rear wall and covered by said front wall, said outer end portion of said vent cover at said rear wall and said sheets being formed with three openings, respectively, said openings being located intermediate said incision and said orifice and registering one with the other, said outer end portion and said sheets being fused together adjacent said registering openings, said vent cover being adapted for the passage of gas between said orifice and said openings.

10. A vented waterproof fabric, comprising two adjacently-positioned sheets or flexible waterproof material adapted to serve as inner and outer fabric component sheets, respectively, said outer sheet being formed with

an elongate incision, and a flexible waterproof vent cover of hollow formation, said vent cover including a front wall and curved wings extending rearwardly from said front wall, said wings being overlapped and sealed together to form a rear wall, said vent cover having an inner end portion lying inserted through said incision and between said sheets, said inner end portion being sealed at said front wall to said outer sheet, said vent cover having an outer end portion projecting from said incision and being formed with an orifice in said rear wall and covered by said front wall, said rear wall and said sheets being formed with three openings, respectively, said openings being located intermediate said incision and said orifice and registering one with the other, said rear wall and said sheets being sealed together adjacent said registering openings, said vent cover being adapted for the passage of gas between said orifice and said openings.

11. A vented waterproof fabric in accordance with claim **10**, said wings being glued together.

12. A vented waterproof fabric in accordance with claim **10**, said wings being fused together.

13. A vented waterproof fabric, comprising two adjacently-positioned sheets of flexible waterproof material adapted to serve as inner and outer fabric component sheets, respectively, said outer sheet being formed with an elongate incision, and a flexible waterproof vent cover of hollow formation, said vent cover including a front wall and a rear wall, said rear wall normally lying substantially parallel to said sheets, said front wall normally lying outwardly-inclined from said rear wall, said vent cover having an inner end portion lying inserted through said incision and between said sheets, said inner end portion being sealed at said front wall to said outer sheet, said vent cover having an outer end portion projecting from said incision and being formed with an orifice in said rear wall and covered by said front wall, said rear wall and said sheets being formed with three openings, respectively, said openings being located intermediate said incision and said orifice and registering one with the other, said rear wall and said sheets being sealed together adjacent said registering openings, said vent cover being adapted for the passage of gas between said orifice and said openings.

14. A vented waterproof fabric, comprising two adjacently-positioned sheets of flexible waterproof material adapted to serve as inner and outer fabric component sheets, respectively, said outer sheet being formed with an elongate incision, and a flexible waterproof vent cover of hollow formation and including a front wall and a rear wall, said vent cover having an inner end portion lying inserted through said incision and between said sheets, said outer sheet being formed with a flap adjacent said inner end portion, said inner end portion being sealed at said front wall to said flap, said vent cover having an outer end portion projecting from said incision and being formed with an orifice in said rear wall and covered by said front wall, said outer end portion of said vent cover at said rear wall and said sheets being formed with three openings, respectively, said openings being located intermediate said incision and said orifice and registering one with the other, said outer end portion and said sheets being sealed together adjacent said registering openings, said vent cover being adapted for the passage of gas between said orifice and said openings.

References Cited by the Examiner

UNITED STATES PATENTS

1,024,135	4/1912	Jacob	154—50
1,826,706	10/1931	Davis	154—51 XR
2,045,317	6/1936	Sobie	154—46
2,466,911	4/1949	Raymond	154—46
2,697,832	12/1954	Stich	154—46 XR
2,851,390	9/1958	Chavannes	154—50 XR

ALEXADER WYMAN, *Primary Examiner.*

EARL M. BERGERT, *Examiner.*