(No Model.) 3 Sheets—Sheet 1

G. J. STEIN.

BOTTLE WASHER.

No. 590,746. Patented Sept. 28, 1897.

Fig. 1.

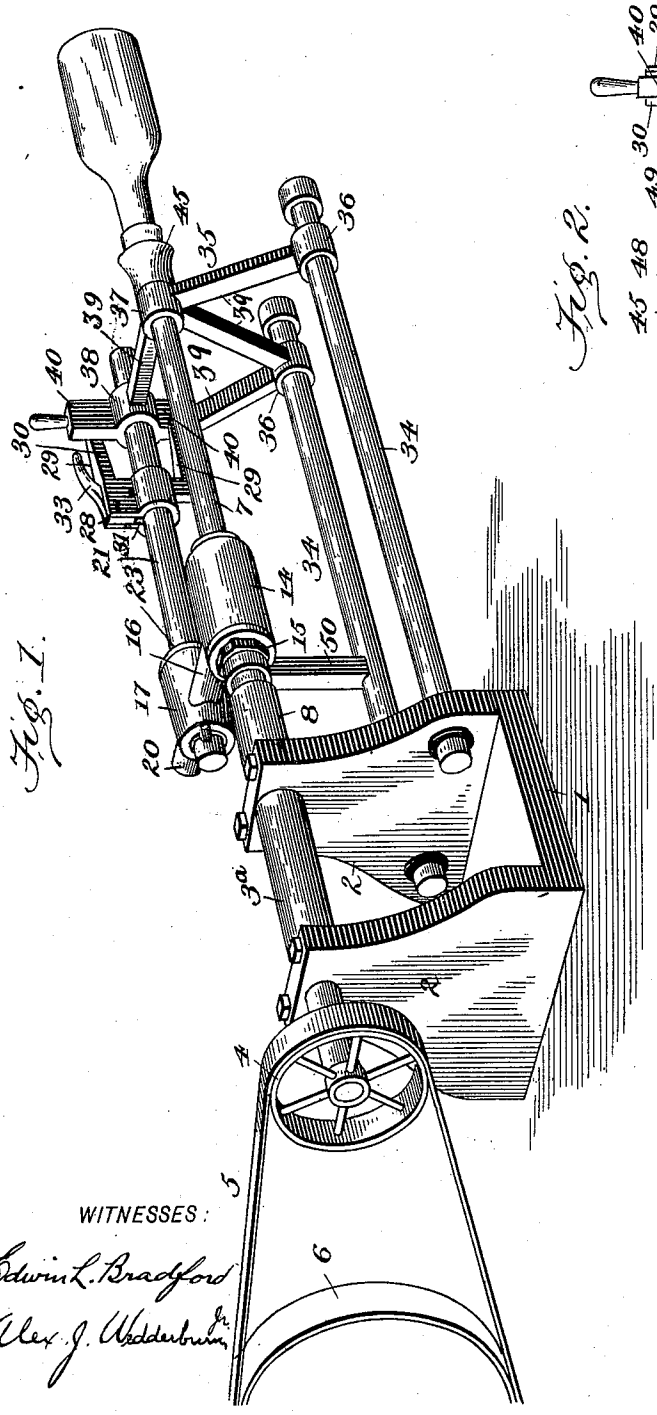

Fig. 2.

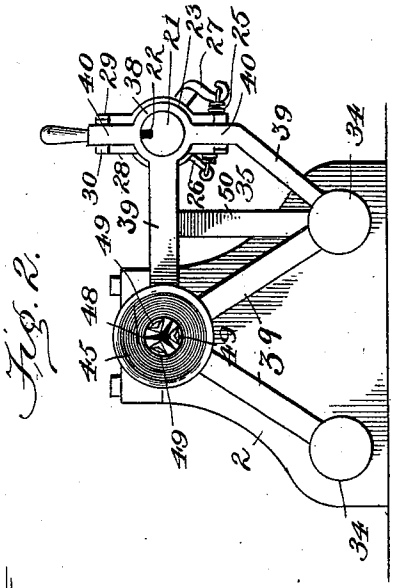

WITNESSES:

Edwin L. Bradford

Alex. J. Wedderburn Jr.

INVENTOR

George J. Stein

BY

John Wedderburn

ATTORNEY.

THE NORRIS PETERS CO., PHOTO-LITHO., WASHINGTON, D. C.

(No Model.) 3 Sheets—Sheet 2.

G. J. STEIN.

BOTTLE WASHER.

No. 590,746. Patented Sept. 28, 1897.

Fig. 3.

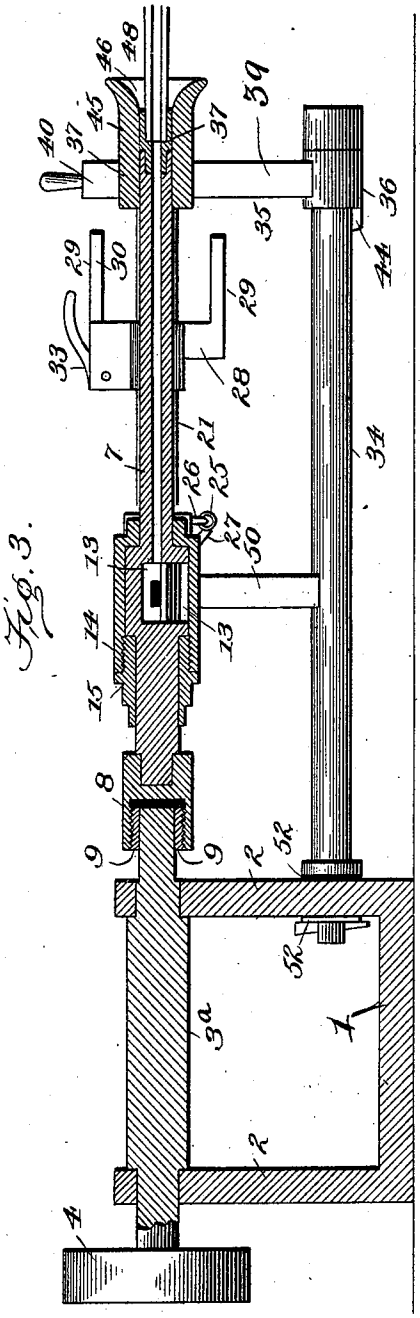

Fig. 4.

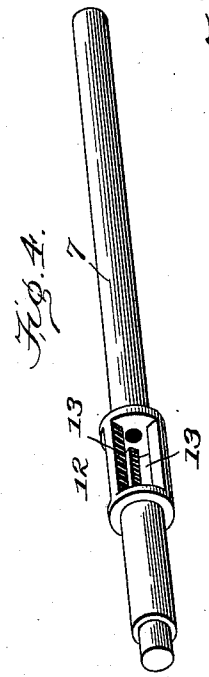

Fig. 6.

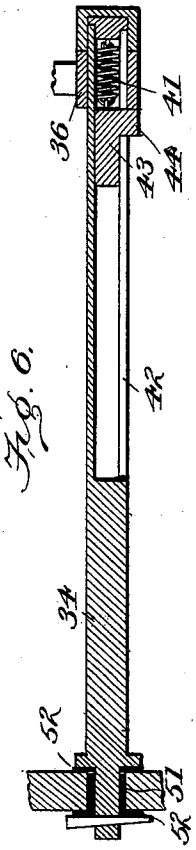

Fig. 5.

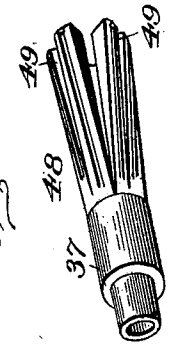

WITNESSES:

Edwin L. Bradford

Alex. J. Wedderburn Jr.

INVENTOR

George J. Stein

BY

John Wedderburn

ATTORNEY.

THE NORRIS PETERS CO., PHOTO-LITHO., WASHINGTON, D. C.

(No Model.) 3 Sheets—Sheet 3.

G. J. STEIN.

BOTTLE WASHER.

No. 590,746. Patented Sept. 28, 1897.

Fig. 7.

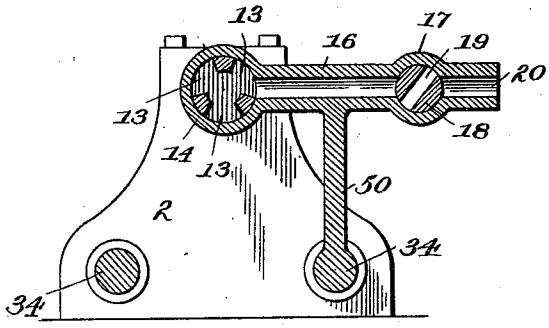

Fig. 8.

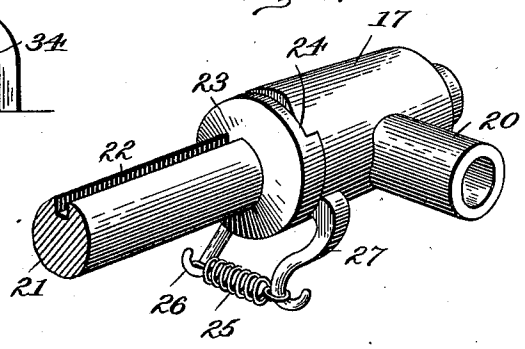

Fig. 9.

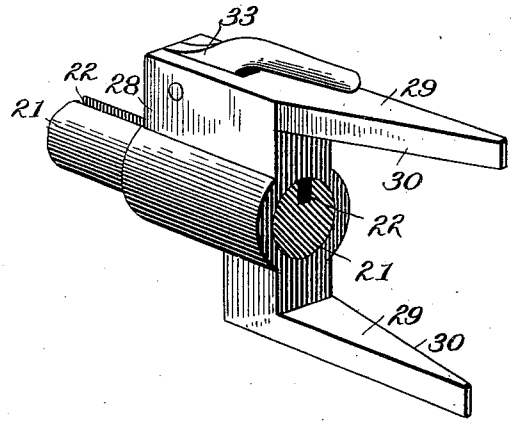

Fig. 10.

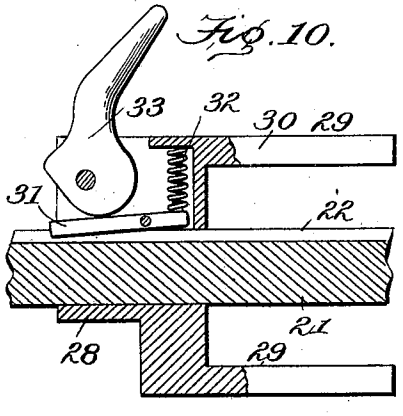

Fig. 11.

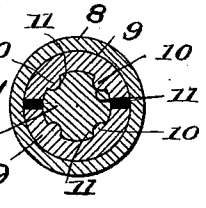

WITNESSES:

Edwin L. Bradford

Alex. J. Wedderburn Jr.

INVENTOR,

George J. Stein,

BY John Wedderburn

ATTORNEY.

THE NORRIS PETERS CO., PHOTO-LITHO., WASHINGTON, D. C.

UNITED STATES PATENT OFFICE.

GEORGE J. STEIN, OF MOUNT CARMEL, PENNSYLVANIA.

BOTTLE-WASHER.

SPECIFICATION forming part of Letters Patent No. 590,746, dated September 28, 1897.

Application filed November 23, 1896. Serial No. 613,138. (No model.)

To all whom it may concern:

Be it known that I, GEORGE J. STEIN, a citizen of the United States, residing at Mount Carmel, in the county of Northumberland and State of Pennsylvania, have invented certain new and useful Improvements in Bottle-Washing Machines; and I do hereby declare the following to be a full, clear, and exact description of the invention, such as will enable others skilled in the art to which it appertains to make and use the same.

This invention relates to bottle-washing machines, and has for its object to provide a simple, rapid, and efficient machine in which provision is made for automatically cutting off the water upon the removal of the bottle, the valve controlling the water-supply being operated by the pressure of the neck of the bottle against a suitable mouthpiece connected to a movable portion of the machine.

It is also the aim of the invention to construct the several parts thereof with reference to the adaptation of the machine to an electric motor, whereby the bottle-washing machine is fully insulated from the current of said motor.

With these and other objects in view the invention consists in an improved bottle-washing machine embodying certain novel features and details of construction and arrangement of parts, as hereinafter particularly set forth, illustrated in the drawings, and incorporated in the claims.

In the accompanying drawings, Figure 1 is a perspective view of the machine complete, also showing the same operating upon a bottle. Fig. 2 is an end view of the same with the bottle omitted. Fig. 3 is a longitudinal section through the machine, taken in line with the main driving-shaft and also showing the latter partly in section. Fig. 4 is a detail perspective view of the outer tubular section of the main driving-shaft. Fig. 5 is a similar view of the cleaning-brush. Fig. 6 is a longitudinal section through one of the guides. Fig. 7 is a cross-section taken in line with the water-supply pipe, showing also the main driving-shaft and valve. Fig. 8 is a detail perspective view of the water-supply valve and the valve-casing. Fig. 9 is a detail perspective view of the slidable valve-operating device. Fig. 10 is a detail section taken through the valve-operating device and showing the manner in which it is clutched to the valve-stem. Fig. 11 is a cross-section through the coupling by which the two sections of the driving-shaft are united.

The improved bottle-washing machine contemplated in this invention embodies a suitable base 1, having spaced bearing-pedestals 2 extending upward therefrom to receive the main driving-shaft 3. At one end the driving-shaft 3 may be provided with a pulley 4, from which a belt 5 extends to another pulley 6, mounted on the shaft of a suitable motor or directly on the armature of an electric motor or shaft of a rotary engine.

If desired, the armature-shaft of the electric motor may be connected directly to the main driving-shaft 3 of the washing-machine, in which case it will be necessary to properly insulate the several parts of the washing-machine in order to prevent the current from being transmitted thereto.

The driving-shaft 3 is made in two sections, the inner section (designated by the numeral 3^a) being solid and the other section (indicated at 7) being tubular. The shaft-section 7 is closed at its inner end and provided thereat with a coupling 8 in the form of a sleeve, which fits over the contiguous end of the inner or main section 3^a of the driving-shaft. This coupling 8 is internally screw-threaded to receive a split collar 9, divided diametrically, the sections of said collar being provided upon their inner surfaces with inwardly-extending ribs or projections 10, adapted to enter correspondingly-located recesses 11 in the adjacent end of the section 3^a of the driving-shaft. The end of the section 3^a of the driving-shaft is preferably wrapped with paper, and the sections of the collar 9 are then applied thereto and the coupling 8 then screwed over said sections, thus firmly uniting the solid and tubular sections of the shaft and insulating them, so as to cut off the current at the point where a coupling occurs.

The tubular section 7 of the main driving-shaft is provided near its inner end with an expanded portion 12, in which three waterways 13 are formed, and this portion of the shaft is made revoluble in a cylindrical casing 14, closed at one end by a collar or bushing 15, screwing therein and embracing the inner

end of the section 7. From the casing 14 a tubular connection or pipe 16 extends laterally to and communicates with a valve-casing 17, in which is mounted a tapering plug-valve 18, having a single waterway 19, adapted to be moved into and out of alinement with the bore of the connection 16, and a nozzle 20, to which the water-supply pipe is adapted to be connected. The valve 18 has an extended stem 21, which is provided throughout its entire length with a groove 22.

Adjacent to the valve-casing 17 the stem 21 is enlarged to form a collar 23, and this collar and also the adjacent end of the valve-casing 17 are formed with coöperating shoulders 24, which serve to limit the rotation of the valve in one direction. The valve is normally held closed by means of a spring 25, which is interposed between a radial extension 26 on the valve-stem and a lug 27 on the valve-casing. Slidingly mounted on the valve-stem 21 is a valve-operating cam 28 in the form of a sleeve, which surrounds said stem and is provided on opposite sides of said stem with reversely-disposed outwardly-projecting fingers 29, having inclined cam edges 30, the purpose of which will hereinafter appear.

Pivotally mounted within the sleeve is a feather 31, fulcrumed intermediate its ends and resting loosely in the groove 22, so as to permit the cam to slide longitudinally on the valve-stem and at the same time cause said stem to revolve when the cam is actuated. The feather 31 is normally held out of contact with the floor of the groove 22 by means of a spring 32, interposed between said feather and the body of the cam, as shown in the drawings, and the feather is adapted to be moved into frictional engagement with the floor of said groove by means of a cam-lever 33, fulcrumed on the sliding cam and having one end mounted in a recess therein so as to bear against the feather upon the opposite side of its fulcrum from that on which the spring is located. By rocking the cam-lever in one direction the feather is forced into firm frictional engagement with the valve-stem 21 and when rocked in an opposite direction it releases said feather, allowing the same to move away from the valve-stem and leaving the valve-operating device free to be slid on any point of the valve-stem.

Located in a plane below the main driving-shaft and arranged in parallel relation are two guides 34, upon which is mounted a slide-frame 35. This slide-frame embodies in its construction sleeve portions 36, which loosely embrace and are adapted to slide on said guides, and other sleeve portions 37 and 38, respectively embracing the main driving-shaft and valve-stem and adapted to slide longitudinally thereon. These several sleeve portions are connected by means of bars or braces 39, thus forming a rigid frame adapted to slide bodily lengthwise of the machine. Extending above and beneath the sleeve 38, which surrounds the valve-stem, are arms 40, which as the slide-frame is reciprocated come in contact with the fingers 29 of the cam 28 and acting upon said fingers cause a partial rotation of the cam, thereby at the same time partially rotating the valve-stem and valve, so as to open the latter and allow water to pass through the connection 16 into the tubular portion 7 of the main driving-shaft. As the slide-frame is retracted and the arms 40 move out of engagement with the fingers 29 the spring 25 acts to turn the valve in a reverse direction for closing it and shutting off the supply of water.

The slide-frame 35 is pressed outward by means of spiral springs 41, which are arranged within the guides 34, the latter being made hollow for a portion of their length in order to receive said springs. The guides 34 are also provided with longitudinal slots 42, in which work spring-actuated slides 43, the same being connected to the springs 41 within the guides and having projecting portions 44, which extend outside of the guides and into the path of the sleeves 36. Thus as the slide-frame 35 is moved inward the sleeves 36 come in contact with the slides 43 and operate against the tension of the springs 41. Upon releasing the slide-frame it is retracted outwardly by means of said springs for the purpose of moving the arms 40 out of engagement with the cam-fingers 29 for the purpose above explained.

Attached to the sleeve 37, surrounding the main driving-shaft, is a flaring mouthpiece 45 of sufficient size to receive the mouth or neck of the bottle to be washed. This mouthpiece is provided with a bore 46, which is adapted to receive the shank or spindle 37 of the cleansing and scouring brush 48. The shank of the brush is fitted tightly into a socket in the end of the tubular section 7 of the main driving-shaft, so as to rotate therewith, and the said shank is provided with a longitudinal through-bore, so as to admit the water to the center of the brush.

Any desired form of brush may be used in connection with the improved washing-machine, either a rubber or bristle brush, but it is preferred to employ a brush substantially the same as that illustrated in the drawings. This brush is composed of a series of strips of rubber meeting on a common central longitudinal line, so as to allow the water to pass outward radially between the strips. The outer surfaces of said strips are corrugated, as indicated at 49, for increasing their efficiency in scouring the inner surface of the bottle and also adding to the flexibilty of the strips, enabling them when forced outward by the water to conform to the inner contour of the bottle and thus reach all points.

In operation the mouth of the bottle is inserted in and pressed against the mouthpiece 45, with the brush 48 passing into the bottle. The bottle is now thrust inward, thus moving the slide-frame 35 longitudinally of the machine and causing the arms 40 of said

frame to operate against the cam-fingers 29, thus turning the valve-stem 21 and opening the valve 18, whereupon water is admitted to the tubular section 7 of the driving-shaft, passing thence to the brush and entering the bottle at the same time that the brush is revolving rapidly within the bottle. When the bottle has been sufficiently cleansed, it is removed from the mouthpiece 45, and as the pressure is removed from the slide-frame 35 the latter is thrust outward by the springs 41, thus moving the arms 40 out of engagement with the cam-fingers 29 and shutting off the water. By providing the inner end of the tubular section 7 of the driving-shaft with three waterways, as described, the flow of the water is made intermittent or cut off to rapid intervals, thus causing the water to spurt at rapid intervals to the brush within the bottle and also serving to agitate the strips of the brush, which thereby operate more effectively to cleanse the inside of the bottle. A brace 50 is interposed between one of the guides 34 and the connection 16 for adding to the strength of the machine and supporting the casings 14 and 17, and the guides 34 are insulated from the pedestal 2, to which they are connected, by means of rubber collars 51 and rubber washers 52, surrounding the inner ends of said guides and preventing any contact between the same and said pedestals.

From the foregoing description it will be seen that the machine is automatic in its action, that it economizes in the consumption of water by cutting off the water-supply upon the removal of each bottle, and that it is adapted to thoroughly and effectually scour and cleanse bottles of different shapes and sizes.

The object in making the cam 28 adjustable longitudinally on the valve-stem is to adapt a machine to bottles of different sizes or lengths, as it will be apparent that in order to cleanse a bottle of considerable length the slide-frame 35 will have to push inward a greater distance in order to enable the brush to reach to the bottom of the bottle.

It will be also understood that the machine is susceptible of various changes in the form, proportion, and minor details of construction which may be accordingly resorted to without departing from the spirit or sacrificing any of the advantages of this invention.

Having thus described the invention, what is claimed as new is—

1. In a bottle-washing machine, a tubular shaft, means for rotating said shaft, a cleaning-brush carried thereby, and a water-supply pipe communicating with said shaft, in combination with a valve for opening and closing said supply-pipe, a cam having a feather-and-spline connection with the valve-stem, a mouthpiece slidably mounted on said shaft, and a frame or extension connected to said mouthpiece and operating upon said cam for turning the valve, substantially as and for the purpose described.

2. In a bottle-washing machine, a tubular shaft, a brush carried thereby, and means for rotating said shaft, in combination with a water-supply pipe communicating with said shaft, a spring-actuated valve for closing said pipe, a cam adjustably mounted on the stem of said valve, a mouthpiece slidably mounted on said shaft, and a frame or extension on said mouthpiece adapted to operate upon said cam for opening the valve and admitting water to said shaft, substantially as and for the purpose described.

3. In a bottle-washing machine, the combination with a revolving tubular shaft, and a cleaning-brush carried thereby, of a slide-frame, a valve operated by said frame for admitting water to said shaft or shutting off the same, a hollow guide on which said slide-frame moves, and a spring inclosed within said guide and operating upon said slide-frame for returning the latter to its normal position, substantially as described.

4. In a bottle-washing machine, the water-supply pipe, in combination with a plug-valve controlling said pipe and provided with an extended stem, a cam adjustably mounted on said stem, a cam-lever for binding said cam at any desired point on the valve-stem, and a slide-frame movable longitudinally of the machine and adapted to operate on said cam for turning the valve-stem, substantially as and for the purpose described.

5. In a bottle-washing machine, the combination with a longitudinal guide, and the main driving-shaft extending parallel therewith and having a tubular portion as described, of a water-supply pipe communicating with said shaft, a valve controlling said pipe and having a stem extending parallel to the driving-shaft, a slide-frame carrying a mouthpiece and slidably mounted on said guide and driving-shaft and valve-stem, and a cam on the valve-stem adapted to coöperate with the portion of the slide-frame for opening and closing the valve, substantially as described.

6. In a bottle-washing machine, the combination with a tubular shaft, and a cleaning-brush carried thereby, of a water-supply pipe, a valve-casing connected thereto, a plug-valve mounted therein and provided with a stop coöperating with the corresponding stop in the valve-casing for limiting the turning of the valve in one direction, a spring for holding said valve closed, a cam mounted on the valve-stem, and a longitudinally-slidable frame adapted to be actuated by pressure on the bottle and to coact with said cam for partially rotating the valve-stem and opening the valve, thereby admitting water to said shaft, substantially as described.

7. In a bottle-washing machine, a tubular shaft closed at one end and provided adjacent thereto with a plurality of lateral waterways

and carrying at its other end the cleaning-brush, and operating means for rotating said shaft, in combination with a casing in which the shaft is snugly mounted, and a water-supply pipe communicating therewith, the arrangement being such that the flow of water to the shaft is interrupted at rapid intervals, substantially as and for the purpose described.

8. In a bottle-washing machine, the combination with a water-supply pipe, and a valve rotatably mounted in a casing communicating with said pipe and provided with a longitudinally-grooved stem, of a slide-frame movable longitudinally of the machine and of said valve-stem, and a shiftable cam mounted on said valve-stem and comprising a cam-finger for engagement with said slide-frame, a feather pivotally mounted on said cam and entering the groove in the valve-stem, a spring for holding said feather out of frictional engagement with said stem, and a cam-lever for forcing said feather into engagement with the stem, whereby the cam may be adjusted to any point on the valve-stem and held, substantially as and for the purpose described.

In testimony whereof I have signed this specification in the presence of two subscribing witnesses.

GEORGE J. STEIN.

Witnesses:
H. D. KLENK,
H. W. FALKER.