(12) UK Patent Application (19) GB (11) 2 201 207 (13) A

(43) Application published 24 Aug 1988

(21) Application No 8711305

(22) Date of filing 13 May 1987

(30) Priority data
(31) 8702070 (32) 30 Jan 1987 (33) GB

(71) Applicant
Lucas Industries Public Limited Company

(Incorporated in United Kingdom)

Great King Street, Birmingham

(72) Inventors
Brian Ingram
Benjamin Andrew Clay
John Patrick Bayliss

(74) Agent and/or Address for Service
A A Thornton & Co
Northumberland House, 303-306 High Holborn,
London, WC1V 7LE

(51) INT CL⁴
B60T 17/16

(52) Domestic classification (Edition J):
F2F BH

(56) Documents cited
None

(58) Field of search
F2F
Selected US specifications from IPC sub-class
B60T

(54) Drum brake system incorporating parking brake

(57) A vehicle braking system comprises front disc brakes (2, 3) and rear drum brakes (4, 5). Each drum brake includes upper and lower double acting hydraulic cylinders (7, 8) for forcing brake shoes into contact with the drums in conventional manner. A control valve (16) permits pressurization of each upper actuating cylinder (7) from front brake line (24) through a shuttle valve (26) on operation of the pedal (23) whilst simultaneously venting each lower actuating cylinder (8). A hydraulically controlled locking arrangement (17) is associated with each upper actuating cylinder (7) whereby the brake shoes can be locked in the configuration produced by pressurizing the cylinder (7) and simultaneously venting the cylinders (8) for parking purposes. This arrangement obviates the need to have a locking arrangement associated with both actuators (7, 8) and in addition provides a means for actuating the rear brakes of the vehicle in the event of certain failures in the normal service braking circuits associated with the rear brakes. Other embodiments are shown.

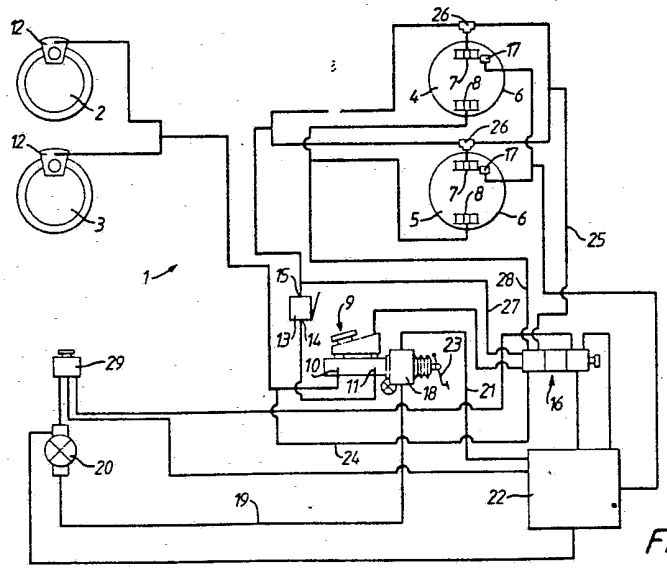

FIG. 1.

The drawing(s) originally filed was (were) informal and the print here reproduced is taken from a later filed formal copy.

The claims were filed later than the filing date within the period prescribed by Rule 25(1) of the Patents Rules 1982.

GB 2 201 207 A

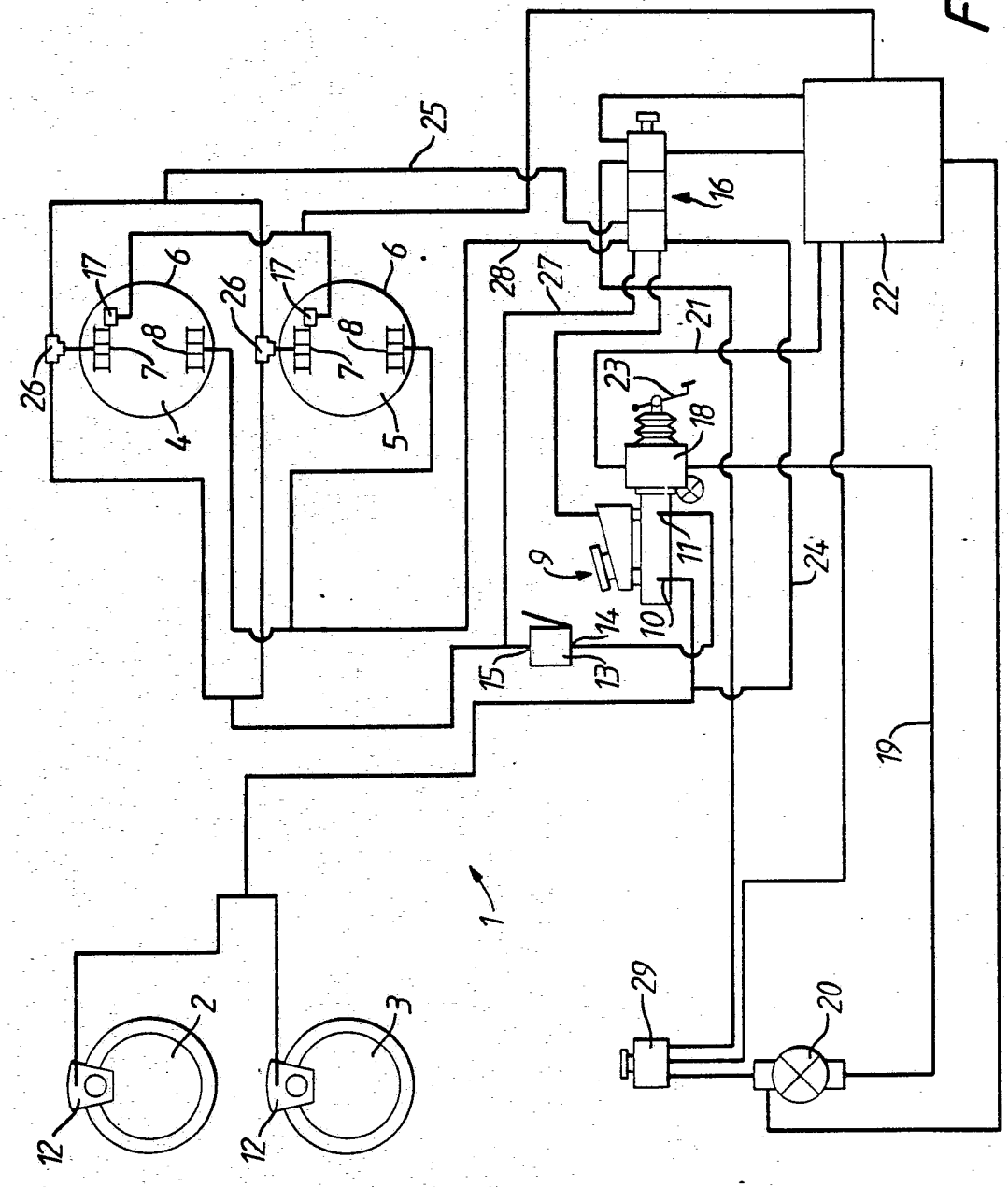

FIG.1.

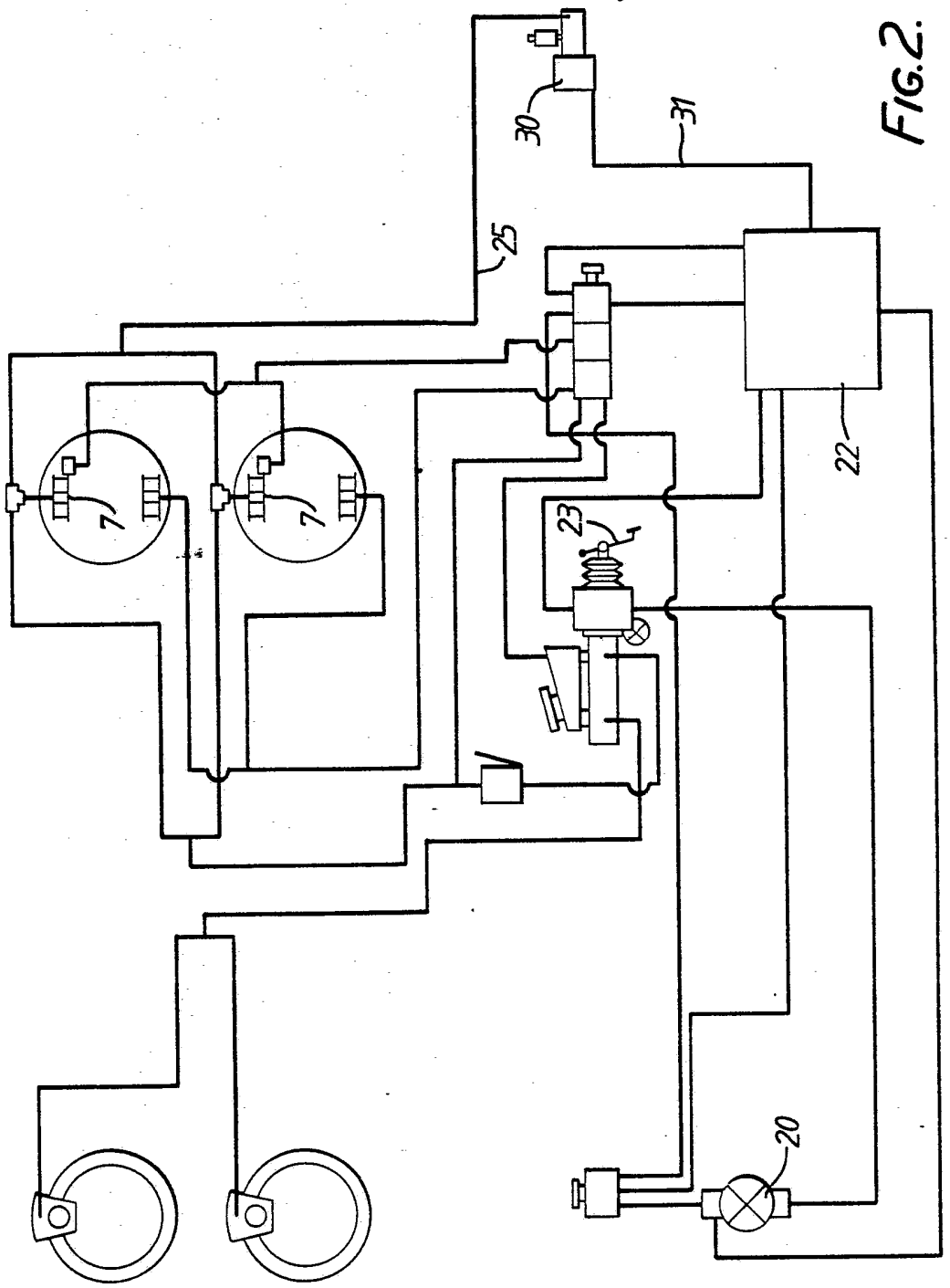

FIG.2.

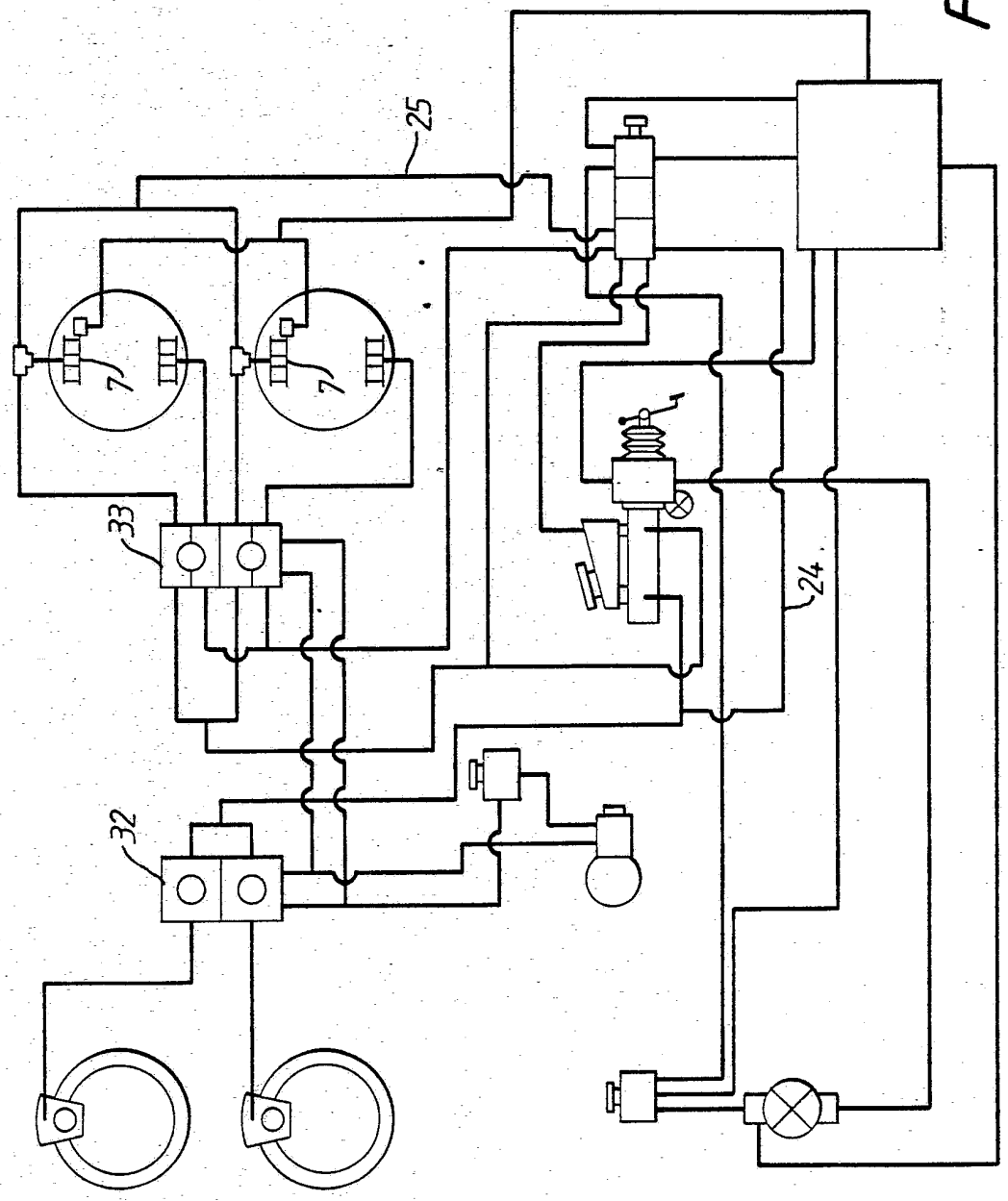

FIG.3.

FIG.4.

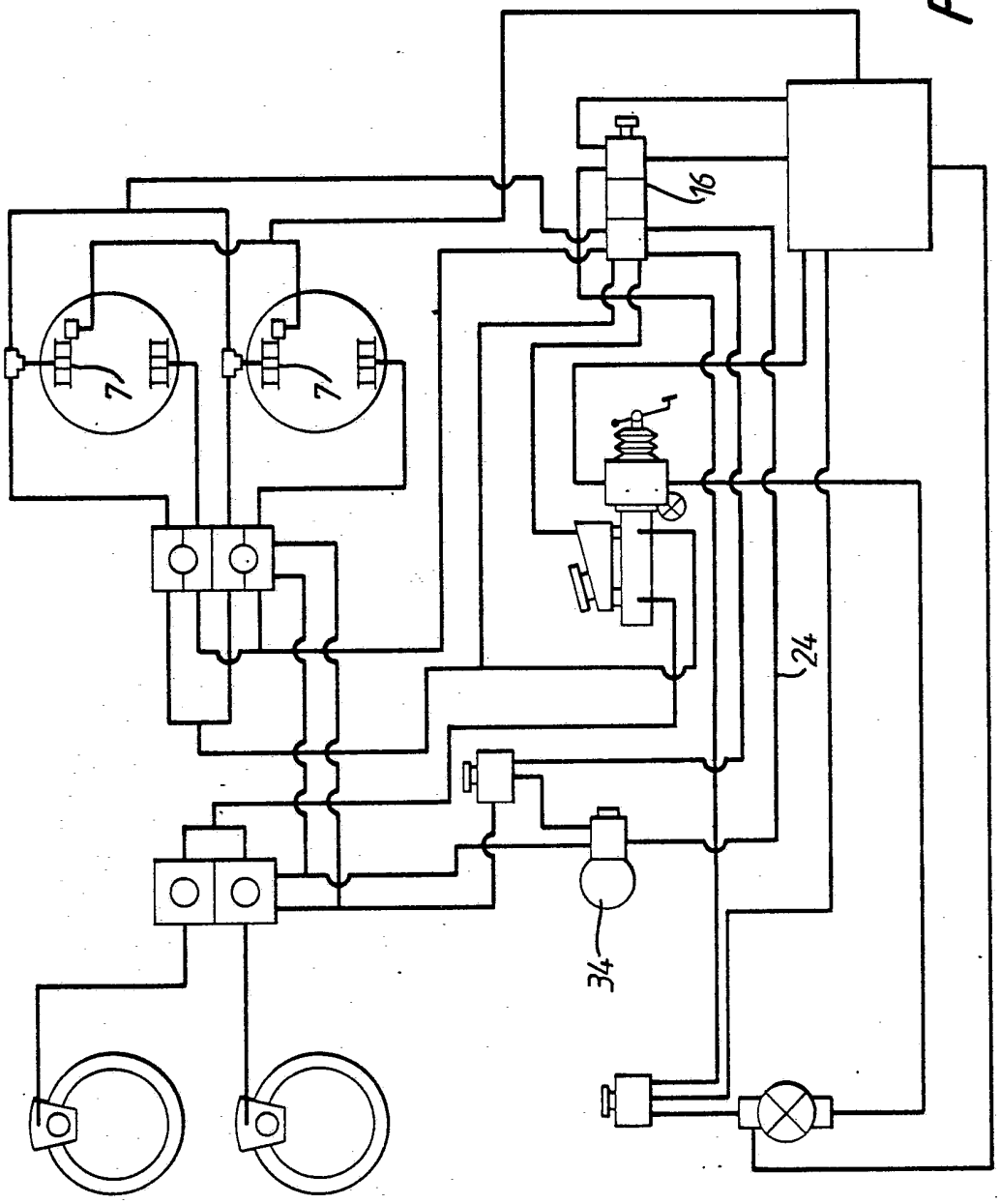

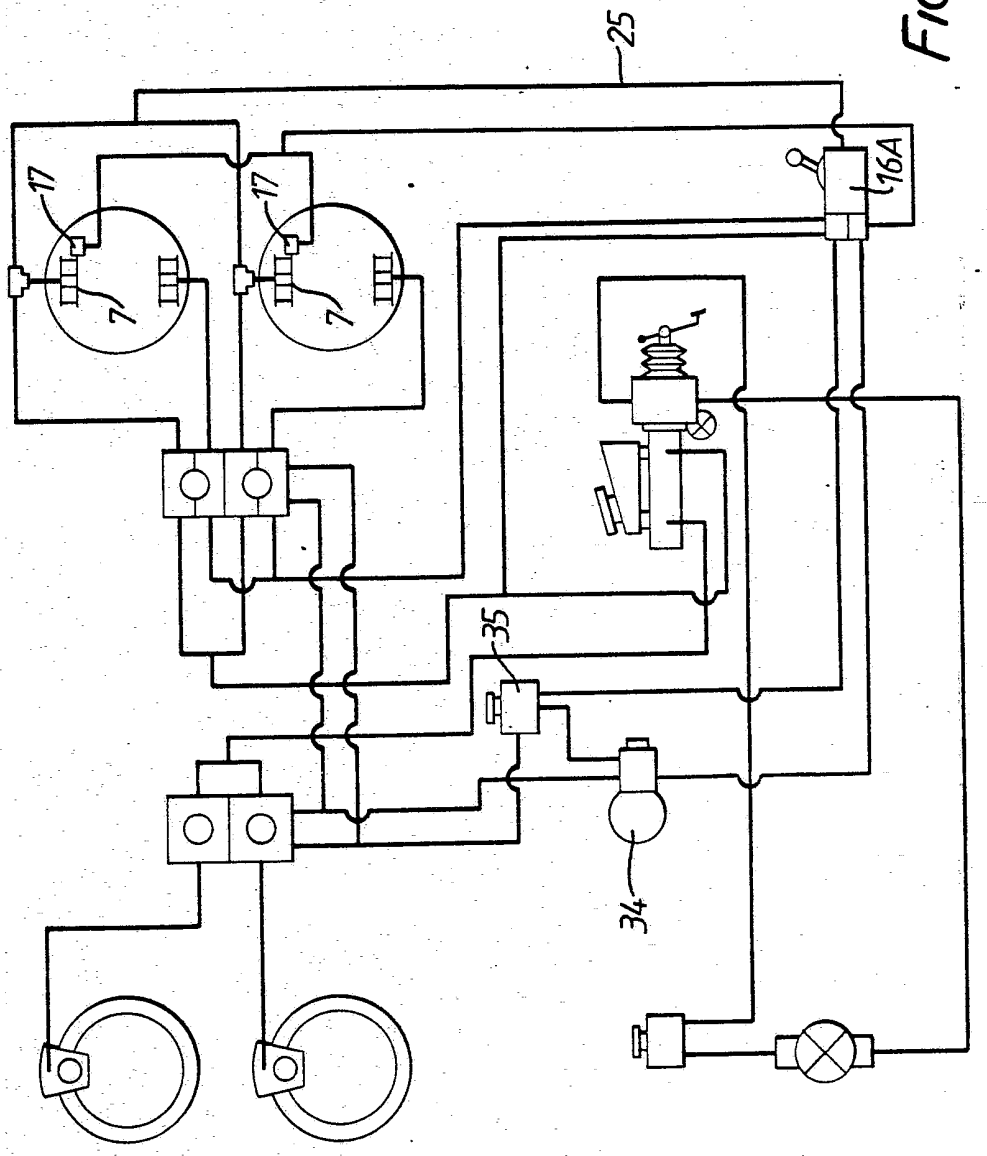

FIG. 5.

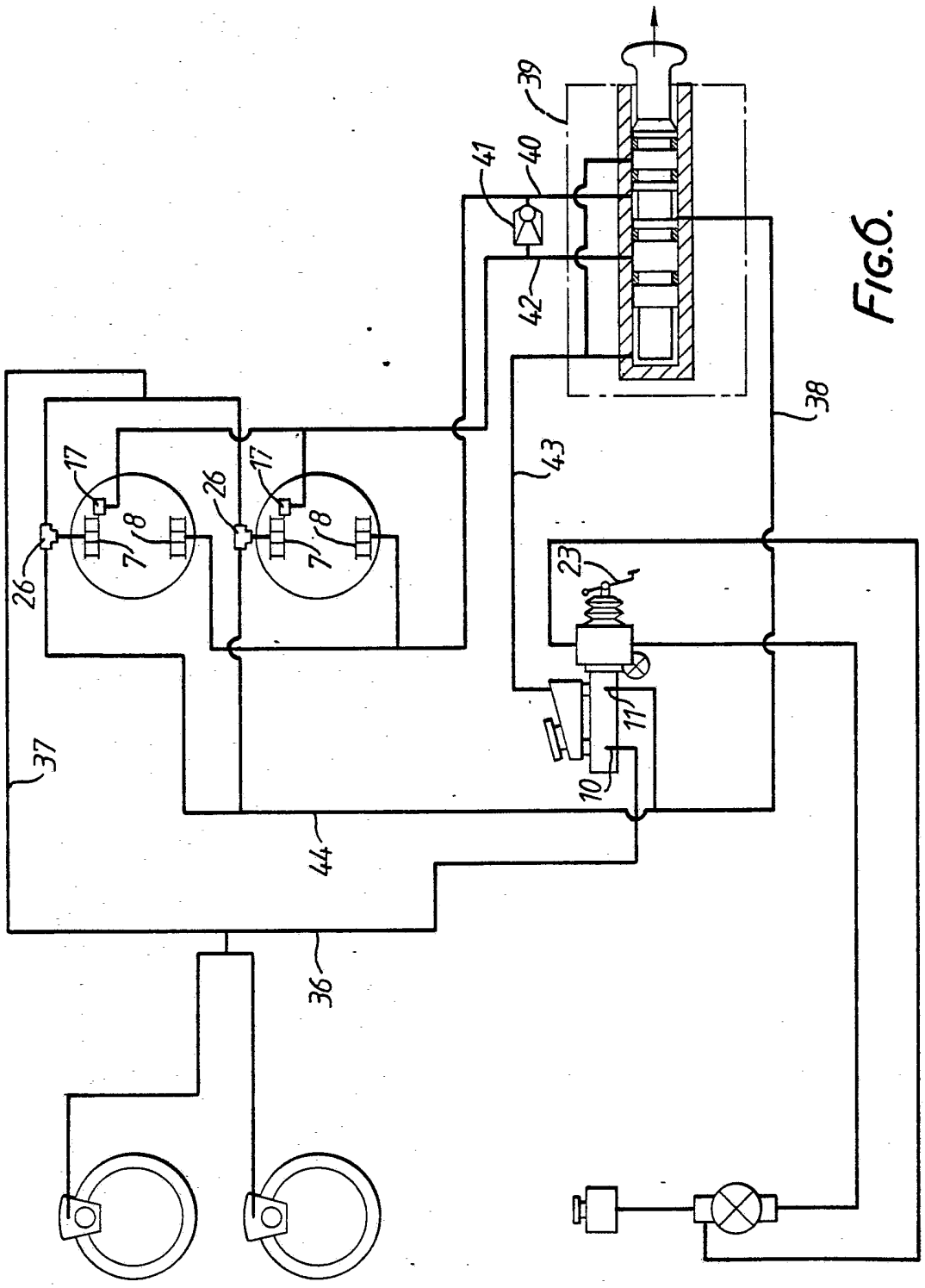

FIG.6.

2201207

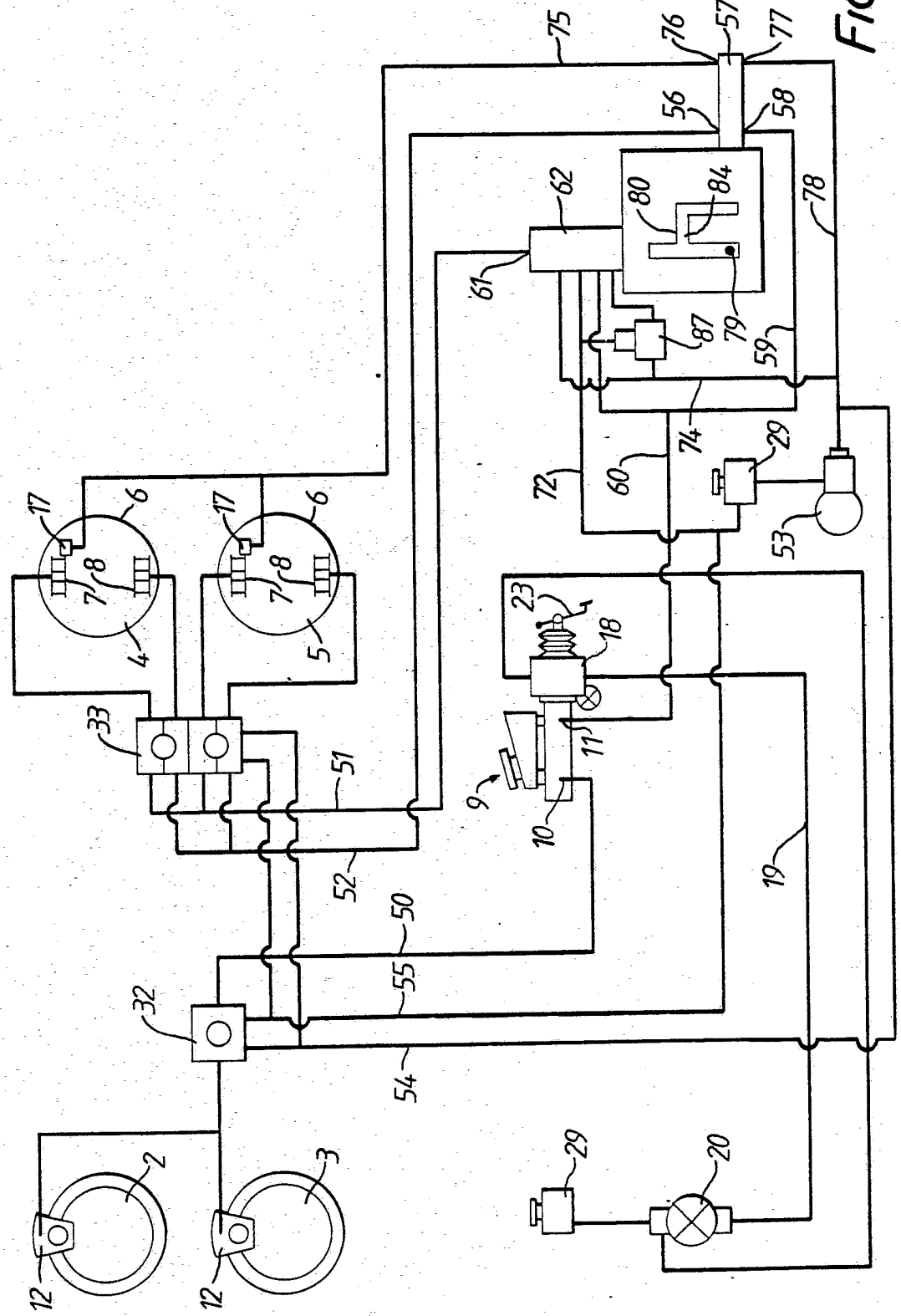

FIG.7.

FIG.8.

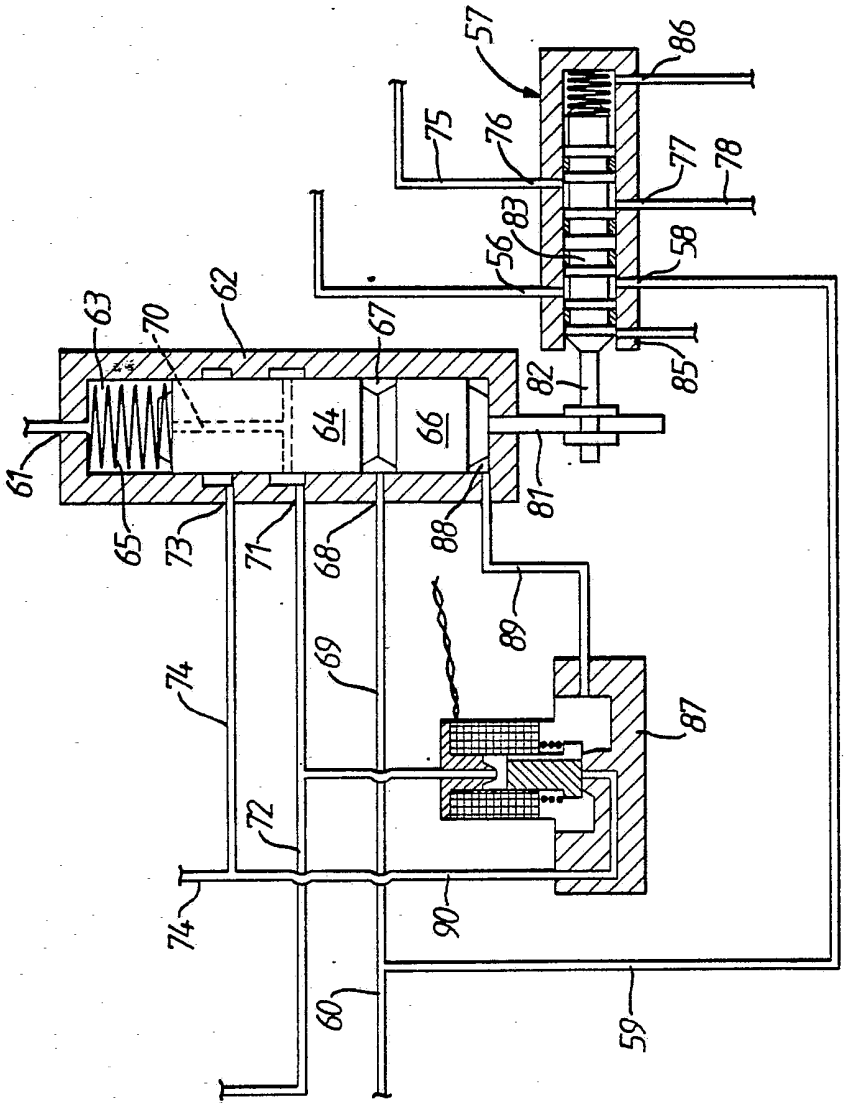
57
86
75
76
77
78
83
56
58
62
63
70
67
82
85
64
66
61
81
65
73
71
68
88
89
74
69
87
72
74
90
60
59

DRUM BRAKE SYSTEM INCORPORATING PARKING BRAKE

This invention relates to a braking system, and more particularly to a braking system which has at least one drum brake provided with a parking brake facility.

A vehicle braking system is known from G.B.-A-1277807 in which the rear drum brakes of the vehicle are provided with a parking brake facility in the form of means for locking the brake shoes in engagement with the brake drum after the brake shoes have been applied to the brake drum using hydraulic power. In practice, the lock units are located adjacent to or incorporated in the brake actuating cylinders of the rear brakes. If the rear brakes of the vehicle incorporate two actuating cylinders, as in the case of figures 2-5 of G.B.-A-1277807 it is necessary to have a separate lock unit associated with each actuating cylinder. This is necessary to ensure that when the brake actuating pressure is released from the actuating cylinders, neither actuating cylinder permits either brake shoe to move away from the drum to completely or partially release the rear brakes.

In practice, a combined actuating cylinder and lock mechanism as shown in Figure 1 of G.B.-A-1285774 may be used in the braking system shown in G.B.-A-1277807. It will be appreciated that the combined actuating

cylinder and lock mechanism shown in Figure 1 of G.B. 1288774 is considerably more complex than a simple double acting brake actuating cylinder, and is correspondingly more expensive. Accordingly, if two of the combined actuators and locks shown in G.B.-A-1288774 are used in the systems of Figures 2-5 of G.B.-A-1277807 a relatively expensive braking system is produced. Further the combined actuator and lock of G.B.-A-1288774 is significantly longer than a simple double-acting actuating cylinder, and accordingly if two such combined actuators and locks are used in a drum brake brake shoes must be incorporated which have an effective circumferential length of less than that which could be accommodated if simple double acting hydraulic actuators were used. This is clearly undesirable.

According to one apsect of the present invention there is provided a braking system comprising: at least one drum brake having a brake drum, two brake shoes, and two spaced apart hydraulic brake actuating cylinders which, during normal service braking, are simultaneously pressurized to force the brake shoes into engagement with the brake drum; control means for simultaneously pressurizing one of the actuating cylinders and relieving pressure from the other actuating cylinder to force the brake shoes into engagement with the brake drum in a parking configuration; and mechanical lock means associated with the said one of the actuating cylinders for mechanically locking the brake shoes in the parking configuration.

By incorporating within the braking system control means for simultaneously pressurizing one of the actuating cylinders and relieving pressure from the other actuating cylinder, it is possible to have a drum brake with two actuating cylinders, only one of which has associated with it a locking device. This is because

when one actuating cylinder is pressurized and pressure is relieved from the other actuating cylinder, the relieved actuating cylinder will adopt its normal brake-released configuration and accordingly once the brake shoes have been locked in position by means of the mechanical lock, there is no danger that the brakes will be partially released as a result of subsequent release of pressure from the actuating cylinder having no mechanical lock.

It will be appreciated that the present invention enables a braking system to be produced which has the advantages of a parking brake in which the brakes are applied hydraulically and then locked in position, whilst at the same time obviating the need to have a mechanical lock associated with each actuating cylinder. This reduces the cost of the braking system, and enables a relatively compact simple double acting actuating cylinder to be used, thereby allowing the maximum available space to be used for the brake shoes.

The invention will be better understood from the following description of preferred embodiments thereof, given by way of example only, reference being had to the accompanying drawings wherein:

Figure 1 shows schematically a preferred embodiment of the invention; and

Figures 2-8 show further embodiments of the invention.

Referring firstly to Figure 1 there is shown schmatically a braking system 1 comprising front disc brakes 2,3 and rear drum brakes 4,5. The braking system 1 is particularly suitable for a commercial vehicle, e.g. a lorry, but may be used in other applications.

Each drum brake 4,5 comprises a brake drum 6 having an internal friction surface which, in use, is engaged by a pair of brake shoes (not shown), an upper double-acting actuator 7, and a lower double-acting

actuator 8. Each brake shoe extends from actuator 7 to actuator 8 and engages an output member of both actuators. Accordingly, when both actuators 7,8 are pressurized both ends of each brake shoe are pressed into engagement with the friction surface of the drum with the result that two leading shoes are provided regardless of the direction of rotation of the drum.

Hydraulic fluid for actuation of the brakes 2-5 is provided by a tandem hydraulic master cylinder 9 having separate outlets 10,11 from the separate internal pressure generating chambers thereof. As will be appreciated by those skilled in the art, in normal use the pressure at the outlet 10,11 will be equal.

Outlet 10 is connected to front brake actuators 12 whilst outlet 11 is connected to an apportioning vavle 13 having an inlet 14 and an outlet 15. The apportioning valve provides free communication between the inlet 14 and outlet 15 until the inlet pressure rises to a cut-in pressure, which may be determined by vehicle loading, and thereafter provides a pressure at the outlet 15 which rises more slowly than the pressure at the inlet 14.

Rear brake actuators 7 are connected direct to the apportioning valve outlet 15, whilst rear actuators 8 are connected to the apportioning valve outlet 15 via a control valve 16. In the normal (service) position of the control valve 16 free communication is established between the actuators 8 and the apportioning valve outlet 15, with the result that upon brake application an equal pressure is delivered to the actuators 7 and 8 of each drum brake.

Each drum brake actuator 7 has associated therewith a mechanical lock capable of maintaining the brake shoes in the expanded state produced by application of hydraulic pressure to the actuator 7. The mechanical lock is itself actuated by relieving hydraulic pressure

from a chamber 17 associated with the mechanical lock. Preferably, the mechanical lock is incorporated in the actuating cylinder 7, and for this purpose the combined actuating cylinder and mechanical lock of G.B.-A-1288774 is preferably used.

The master cylinder 9 includes a hydraulic servo unit 18 which is supplied with low pressure hydraulic fluid via a pipe 19 from a pump 20. Low pressure hydraulic fluid from the servo unit 18 is supplied via a pipeline 21 and pressure control valve 22 to the control valve 16.

In use, during normal driving a brake pedal 23 is depressed to apply the service brakes. Depressing pedal 23 causes hydraulic fluid under pressure to be delivered from outlets 10,11 of the master cylinder 9 to the front and rear brakes, the rear brake pressure being controlled under appropriate conditions by the apportioning valve 13 as will be understood by those skilled in the art. In order to apply the parking brake the service brake pedal 23 is held down and the control valve 16 is moved from its normal (service) position to a second (parking) position. Initial movement of the control valve 16 connects pipe 24, which branches off the front brake supply pipe, to a pipe 25 which is connected to shuttle valves 26 provided in the supply pipe to actuators 7. The shuttle valves 26 have the effect of connecting the actuator 7 to whichever of the inputs to the shuttle valve is at higher pressure. Since at this point the brake pedal 23 is fully depressed, the pressure at the outlet of the apportioning valve 15 will be lower than the pressure supplied to the front brakes 2,3. Accordingly, connecting pipe 24 to pipe 25 will cause the shuttle valves 26 to move to connect the pipe 25 to the actuators 7 and thereby applying full front brake pressure to the actuators 7. This ensures that the actuators 7 are fully pressurized regardless of pressure at the outlet of the apportioning

valve 15.

Further movement of the control valve 16 towards the second (parking) position interrupts communication between the pipes 27 and 28 and connects the pipe 28 to the reservoir 29. Accordingly, the actuators 8 and vented to reservoir via the control valve 16. Since the output members of each actuator 8 will be loaded by their associated brake shoe under the influence of actuators 7, venting of the actuators 8 will cause the or each extended output member thereof to be retracted under the imposed load of the brake shoes. Any retraction of output members of the actuators 8 will be accompanied by a corresponding increase in length of the actuators 7. This will continue until the actuator 8 is fully contracted, or until the load imposed by the brake shoes is relieved, e.g. by an adjusting strut extending between the brake shoes in the vicinity of the actuators 8.

Further movement of the control valve 16 into the second (parking) position vents the chambers 17 to actuate the mechanical locks. The brake pedal 23 can now be released, and the rear brake shoes will be maintained in firm engagement with the drums by means of the mechanical locks. It will be noted that since the actuators 8 are fully vented before the brake pedal 23 is released, release of the brake pedal will not cause any substantial relaxation of the force with which the shoes are applied to the drums.

Release of the parking brake is effected firstly by returning the control valve 16 to its normal (service) position, thereby causing pressure to be applied to the chambers 17 and causing the normal service connections to the rear brakes to be re-established, and secondly depressing the brake pedal 23 to permit release of the mechanical lock, as described in more detail in G.B.-A-

1288774.

It will be noted that in the above described system the final step in releasing the parking brake is to depress the brake pedal 23. To overcome the problem of releasing the parking brake when the vehicle is held on the clutch as may be necessary in hill starts, the control valve 16 may be modified so that, as a preliminary to brake release, the service brake pedal 23 is depressed to pressurize the actuator 7. The control valve 16 is designed to lock this pressure as the control valve is moved towards the service position. At an appropriate point during the movement of the control valve towards the service position, and in particular after pressure has been re-established within chambers 17, the locked pressure is released. thereby permitting release of the mechanical lock.

Referring now to Figure 2, the system shown is very similar to that of Figure 1 except that high pressure fluid for the pipe 25 is not derived from the front brake circuit, but rather is derived from a hydraulic booster 30 which is supplied with low pressure hydraulic fluid via pipe 31 and valve 22 from the pump 20. Accordingly, with the embodiment of Figure 2 both parking brake application and parking brake release can be effected without depressing the service brake pedal 23. In relation to Figure 2 it will also be noted that the pipe 25 and booster 30 provide a means for pressurizing the actuators 7 which is independent of the service brake arrangements, except to the extent that the booster 30 is supplied by the pump 20. Accordingly, the parking brake of Figure 2 can function as

an emergency brake for the purpose of applying the rear brakes in the event of failure of the normal service brake sytem.

The arrangement of Figure 3 generally corresponds to that of Figure 1 except that in the Figure 3 system anti-lock modulators 32,33 are interposed in the pressure supply lines to all the brake cylinders. The presence of the anti-lock system does not affect operation of the parking brake arrangement as described above. It will be noted, however, that pipe 25 provides a means of pressurizing actuators 7 by means of fluid from the pipe 24 which is connected to the front wheel brake circuit up-stream of the modulators 32. Accordingly, in the event of failure of the anti-lock system in a manner which causes inadequate pressurization of the rear brakes, the parking brake can be used as an emergency brake to apply the full outlet pressure of the master cylinder to the rear brake actuators 7.

The embodiment of Figure 4 is generally similar to that of Figure 3 except that the pipe 24 which supplies high pressure fluid to the control valve 16 is connected to a pressure accumulator 34 of the anti-lock system. Accordingly, in the event of failure of the service brakes due, e.g. to a master cylinder fault, the parking brake can again serve as an emergency brake by supplying pressurized hydraulic fluid from the accumulator 34 to the rear brake actuators 7 to apply the rear brakes.

In the arrangement of Figure 5 both the pipe 25 and the mechanical lock actuating chambers 17 are supplied from the anti-lock system accumulator 34 via a modified control valve 16A. The sequence of operation of the control valve 16A is substantially identical to the valve 16 described above with reference to Figure 1, except that the actuators 7 are pressurized with fluid supplied from the accumulator 34 and the chambers 17 are vented to

the accumulator reservoir 35 upon actuation of the parking brake. To release the parking brake the chambers 17 are repressurized using fluid from the accumulator 34. Again, the parking brake of Figure 5 can serve as an emergency brake to provide application of the rear brakes entirely independent of the normal service brake system.

If no anti-lock system or apportioning valve is required, the embodiment of Figure 1 can be simplified by the omission of the apportioning valve 13, in which case the inputs to the shuttle valves 26 supplied, in the case of Figure 1, from the pipe 25, can be connected directly to the front brake circuit. Under all normal braking conditions, if no anti-lock system or apportioning valve is provided the pressure subsisting in the rear brake circuit will be equal to the pressure subsisting in the front brake circuit. Accordingly, the direct connection provided between the shuttle valves 26 and the front brake circuit will merely constitute a link between various points in the braking circuit at substantially equal pressure, and there will be no substantial flow along the link. However, in the event of failure of the rear brake circuit the direct connection between the shuttle valve 26 and the front brake circuit will enable the front brake circuit to pressurize the actuators 7 both during service braking, and upon application of the parking brake. Accordingly, in this embodiment of the invention service braking on all four wheels is possible in the event of failure of the rear brake circuit, and the parking brake can still be applied if the front circuit or the rear circuit has failed.

Referring now to Figure 6 there is illustrated

a further embodiment of the invention in which no anti-lock system or apportioning valve is provided. As described in the immediately preceding paragraph, the shuttle valves 26 are connected directly to the front brake circuit 36 by a pipe 37. A pipe 38 connects master cylinder outlet 11 to a spool valve 39 which, in the normal (service) position, provides communication between the pipe 38 and a pipe 40 which is connected to the lower rear actuators 8, and, via a non-return valve 41, to the mechanical lock actuating chambers 17. The chambers 17 are connected direct to the spool valve via a return pipe 42 which in the normal (service) position of the spool valve is closed by the spool valve. The spool valve is connected to the master cylinder reservoir by a pipe 43.

In use, when the spool valve 39 is in the illustrated normal (service) position application of the brakes by depressing the brake pedal 23 causes fluid to flow from the master cylinder outlet 10 to the front brake circuit 36, and from the master cylinder outlet 11 to the upper rear actuators via pipe 44 and to the lower rear actuators via pipe 38, spool valve 39, and pipe 40. It will be noted that each time pipe 40 is pressurized by application of the service brakes the chambers 17 of the lock actuators are pressurized to the same pressure as the pipe 40 via non-return valve 41. Upon release of the service brakes pressure in the chamber 17 is maintained by non-return valve 41. Accordingly, upon each application of the service brakes the chamber 17 is fully pressurized and remains so during subsequent release of the service brakes, thereby ensuring that the rear brakes are not locked on during normal service braking.

In order to apply the parking brakes, the brake pedal 23 is depressed and the spool valve is pulled out, which firstly closes the pipe 38 at the spool valve, and next connects the pipe 40 to the pipe 43, thereby

connecting the lower actuators 8 to the master cylinder reservoir. Continued outward movement of the spool valve connects the pipe 42 to the pipe 43, thereby allowing the lock actuator chambers 17 to be depressurized by returning hydraulic fluid to the master cylinder reservoir. During this period the upper brake cylinders 7 remain pressurized via pipe 44. In the event of failure of the rear brake circuit, depression of the brake pedal 23 accompanied by movement of the spool valve from its normal (service) position to its second (parking) position enables pressurization of the upper actuators 7 from the front brake circuit 36 via pipe 37, and simultaneously allows depressurization of the lock actuator chambers 17, as described above. Accordingly, the parking brake will remain effective despite complete failure of the rear brake circuit. As noted above, in the event of failure of the rear brake circuit application of the service brakes will cause pressurization of the upper cylinders 7 via the pipe 37, thereby maintaining four-wheel braking even in the event of failure of the rear brake circuit.

Figures 7 and 8 show a further embodiment of the invention. To the extent that the embodiment of Figure 7 and 8 includes components corresponding to those of previously described Figures, the same reference numerals have been used.

Referring firstly to Figure 7, the braking system illustrated includes a tandam master cylinder 9 the outlet 10 of which is connected by a pipe 50 to an anti-lock modulator 32, which in turn is connected to the front brake actuators 12. The upper and lower rear brake actuators 7 and 8 are connected via rear anti-lock modulators 33 to respective supply pipes 51 and 52, both upper rear actuators 7 being connected to the pipe 51 and both lower rear actuators being connected to the pipe 52.

The anti-lock modulators 32,33 are connected to a motor driven pressure accumulator 53 by a pipe 54 and to reservoir 29 by a pipe 55 to provide for normal operation of the anti-lock modulators, as will be well understood by those skilled in the art.

Pipe 52, which pressurizes lower rear actuators 8, is connected to a first port 56 of a spool valve 57. A second port 58 of the spool valve is connected via pipes 59 and 60 to the outlet 11 of the master cylinder 9. With the braking system in the noraml (service) configuration the spool valve 57 provides free communication between the ports 56 and 58 and accordingly when the brake pedal 23 is depressed and the outlet 11 of the master cylinder pressurized, hydraulic pressure is supplied to the rear lower actuators 8 via pipes 60 and 59, spool valve 57, pipe 52, and anti-lock modulators 33.

Pipe 51, which supplies fluid to the upper rear brake actuators 7 is connected to a port 61 of a servo valve 62. Referring to Figure 8, the port 61 communicates with a chamber 63 within the servo-valve defined between the servo-valve body and a piston 64 slidably mounted in the servo-valve body. The piston 64 is biased downwardly as viewed in Figure 8 by a spring 65 and, when the braking system is unpressurized, adopts the position illustrated in Figure 8 in which the lower end of the piston 64 rests on the upper end of a further piston 66 slidably mounted within the servo-valve body. A chamber 67 surrounds the zone where the pistons 64,66 abut, and the chamber 67 is connected to the master cylinder outlet 11 via a port 68 in the servo-valve body, pipe 69, and pipe 60. In the normal position of the piston 64, as illustrated in Figure 8, the chamber 63 is connected via an internal passage 70 in the piston 64 to a port 71 which is in turn connected

to the reservoir 29 by pipe 72. Thus, in the normal illustrated position of the piston 64 the upper rear actuators 7 are connected to reservoir via anti-lock modulators 33, pipe 51, port 61, chamber 63, passage 70, port 71, and pipe 72. The servo-valve 62 includes a further port 73 which is connected by pipe 74 to the accumulator 53. When the service brakes are applied by depressing the brake pedal 23 the chamber 67 is pressurized which raises the piston 64, initially cutting off the communication between the chamber 63 and the port 71 thereby isolating the actuators 7 from reservoir, and then connecting the chamber 63 to the port 73, thereby pressurizing the actuators 7 from the accumulator 53 via pipe 74, port 73, passage 70, chamber 63, port 61, pipe 51, and anti-lock modulators 33. The piston 64 will adopt a balance position in which the pressure in the chamber 67 acting over the area of the piston is balanced by the pressure in the chamber 63 acting over the area of the piston combined with the force of the spring 65. The spring 65 will be a relatively light spring, and accordingly the piston 64 will adopt a balance position to ensure that the pressure in the chamber 63 which is communicated to the upper brake actuators 7 is substantially the same as the pressure for the time being subsisting in the chamber 67, i.e. the pressure at the outlet 11 of the master cylinder 9.

The actuating chambers 17 of the lock actuators are connected by a pipe 75 to a port 76 of the spool valve 57. In the normal service position of the spool valve the port 76 is in free communication with a port 77 of the spool valve which is connected by a pipe 78 to the accumulator 53. During normal service braking, therefore, the chambers 17 of the lock actuators are permanently pressurized by the accumulator 53.

Parking brakes of the vehicle are controlled by

a manually movable lever 79 which is constrained to move in an h-shaped gate 80. Vertical movement of the lever 79 is communicated to the piston 66 via a rod 81 for the purpose of mechanically shifting the piston 66 within the servo-valve body. Similarly, horizontal movement of the lever 79 within the gate 80 is communicated to the spool of the spool valve 57 by a rod 82 to cause mechanical shifting of the valve spool. The normal (service) position of the lever 79 is as illustrated in Figure 7, i.e. at the bottom of the left-hand leg of the "h". In this position, the piston 66 and valve spool 83 are in the positions illustrated in Figure 8.

In order to apply the parking brakes the lever 79 is raised until it reaches the cross-arm 84 of the gate 80. Raising the lever 79 raises the rod 81 and in turn raises the piston 66, mechanically forcing the piston 64 upwards to connect the upper cylinders 7, to the accumulator 53 as previously described. Raising the lever 79 accordingly pressurizes the upper rear cylinders 7. The lever 79 is then moved to the right through gate 84 which causes the spool 83 to move to the left as illustrated in Figure 8. This movement of the spool 83 initially isolates the port 56 from the port 58 to isolate the lower rear brake actuators 8 from the master cylinder outlet 11. Continued movement of the spool valve connects the port 56 to a reservoir port 85 to vent any pressure subsisting in the lower rear actuators 8. Movement of the spool 83 also isolates the port 76 from the port 77 to isolate the lock actuator chambers 17 from the pressure source 53, and then connects the port 76 to a reservoir port 86 to vent the chambers 17. The parking sequence is completed by moving the lever 79 downwardly to the bottom of the right-hand leg of the "h" thereby returning the pistons 64 and 66 to the positions illustrated in Figure 8, and venting the

upper actuators 7 to reservoir.

The parking brakes are released by reversing the above described sequence of movements of the lever 79. If returning the lever 79 to the position illustrated in Figure 7 does not effect release of the parking brakes because of high mechanical loading on the locking mechanism (as might be induced by thermal contraction of the brake drums) the lever 79 may be raised again up the left-hand leg of the "h" to a position higher than the cross-arm 84. The effect of this is to produce a pressure in the upper actuators 7 which is higher than that used when applying the parking brake, thereby relieving the locking mechanism of any axial loading preventing its release. The lever 79 is then returned to the position illustrated in Figure 7 to complete release of the brakes.

The braking system of Figures 7 and 8 incorporates in addition a solenoid valve 87 which when energized connects a chmaber 88 defined between the piston 66 and the lower end wall of the servo-valve housing to the accumulator 53 via pipes 89,90, and 74. Pressurizing the chamber 88 has the effect of raising the pistons 66 and 64 to connect the upper rear actuators 7 to the accumulator as described above.

The solenoid 67 is actuated either manually or automatically if either of the rear wheels spins - e.g. in mud or on snow or ice. It will be appreciated that actuation of the solenoid 87 applies brake pressure to both upper rear actuators 7. However, if one wheel is spinning and the other is not turning the anti-lock modulator 33 operates to relieve the brake pressure in the actuators 7 of the non-turning wheel. The combined effect of the solenoid 67 and the anti-lock modulators 33 in the event that one wheel is spinning and one wheel is not turning is accordingly to

apply brake pressure to the upper actuators 7 of the spinning wheel, thereby to an extent braking that wheel and allowing the differential of the vehicle to apply a higher torque to the non-spinning wheel. Actuation of the solenoid 87 when one rear wheel is spinning - e.g. in mud will accordingly increase the traction applied to the non-spinning wheel and assist the vehicle in moving.

Preferably, the system incorporates means for disabling operation of the solenoid 87 at speeds above a predetermined value.

In all the above described embodiments the mechanical lock is preferably incorporated into the actuating cylinder 7 as, for example, described in GB-A-1288774.

CLAIMS

1. A vehicle braking system comprising: at least one drum brake having a brake drum, two brake shoes, and two spaced apart hydraulic brake actuating cylinders which, during normal service braking, are simultaneously pressurized to force the brake shoes into engagement with the brake drum; control means including means for simultaneously pressurizing one of the actuating cylinders and for relieving pressure from the other of the actuating cylinders to force the brake shoes into engagement with the brake drum in a parking configuration; and mechanical lock means associated with the said one of the actuating cylinders for mechanically locking the brake shoes in the parking configuration.

2. A vehicle braking system according to claim 1 wherein the means for pressurizing one of the actuating cylinders comprises: a shuttle valve in the normal service supply pipe to the said one of the actuating cylinders; and an auxiliary pipe for connecting the shuttle valve to a source of actuating fluid independent of the normal service supply of actuating fluid to the said one of the actuating cylinders whereby when the pressure in the auxiliary pipe is higher than the pressure in the service supply pipe the auxiliary pipe is connected to the said one of the actuating cylinders by the shuttle valve.

3. A vehicle braking system according to claim 2 wherein the source of actuating fluid to which the auxiliary pipe is connected is independent of the normal service brakes of the vehicle to which the braking system is fitted whereby the said one of the actuating cylinders may be pressurized via the auxiliary pipe in the event of failure of the service brake actuating fluid system.

4. A vehicle braking system according to claim 2 wherein the source of actuating fluid to which the auxiliary pipe is connected is a brake circuit of the braking system which is independent of the normal service brake circuit of the drum brake whereby the said one of the actuating cylinders may be pressurized via the auxiliary pipe in the event of failure of the normal service brake circuit of the drum brake.

5. A vehicle braking system according to claim 4 wherein the drum brake is a rear brake of the vehicle to which the braking system is fitted, and the auxiliary pipe is connected to a front brake circuit of the braking system.

6. A vehicle braking system according to claim 2 wherein there is an anti-lock brake pressure modulator associated with the drum brake, and the source of actuating fluid to which the auxiliary pipe is connected is independent of the anti-lock brake pressure modulator so that the said one of the actuating cylinders may be pressurized via the auxiliary pipe in the event of failure of the anti-lock brake pressure modulator.

7. A vehicle braking system according to claim 1 wherein the braking system comprises a master cylinder having an output which, during normal service braking, controls a valve for connecting the said one of the actuating cylinders to a source of pressurized actuating fluid, and wherein the means for pressurizing one of the actuating cylinders comprises means independent of the master cylinder for shifting said valve to a position in which the full pressure of said source is applied to the said one of the actuating cylinders.

8. A vehicle braking system according to claim 7 wherein the drum brake is one of a pair of substantially identical drum brakes of the wheels of the driving axle of a vehicle, and each said one of the actuating cylinders is connected to the said valve for the receipt of actuating fluid therefrom.

9. A vehicle braking system according to claim 8 wherein anti-lock brake pressure modulators are interposed between the said valve and each said one of the actuating cylinders, and wherein means are provided for shifting the valve to a position in which pressurized fluid from said source is supplied to each said one of the actuating cylinders in the event that one wheel only of the wheels of the driving axle is turning whereby the turning wheel will be braked to a greater extent than the non-turning wheel by the action of the anti-lock brake pressure modulator.

10. A vehicle braking system, substantially as hereinbefore described with reference to the accompanying drawings.

Published 1988 at The Patent Office, State House, 66/71 High Holborn, London WC1R 4TP. Further copies may be obtained from The Patent Office, Sales Branch, St Mary Cray, Orpington, Kent BR5 3RD. Printed by Multiplex techniques ltd, St Mary Cray, Kent. Con. 1/87.