Nov. 22, 1949 C. D. MacCRACKEN 2,488,548

FORCED-AIR HOUSE HEATING APPARATUS

Filed June 22, 1946 4 Sheets-Sheet 1

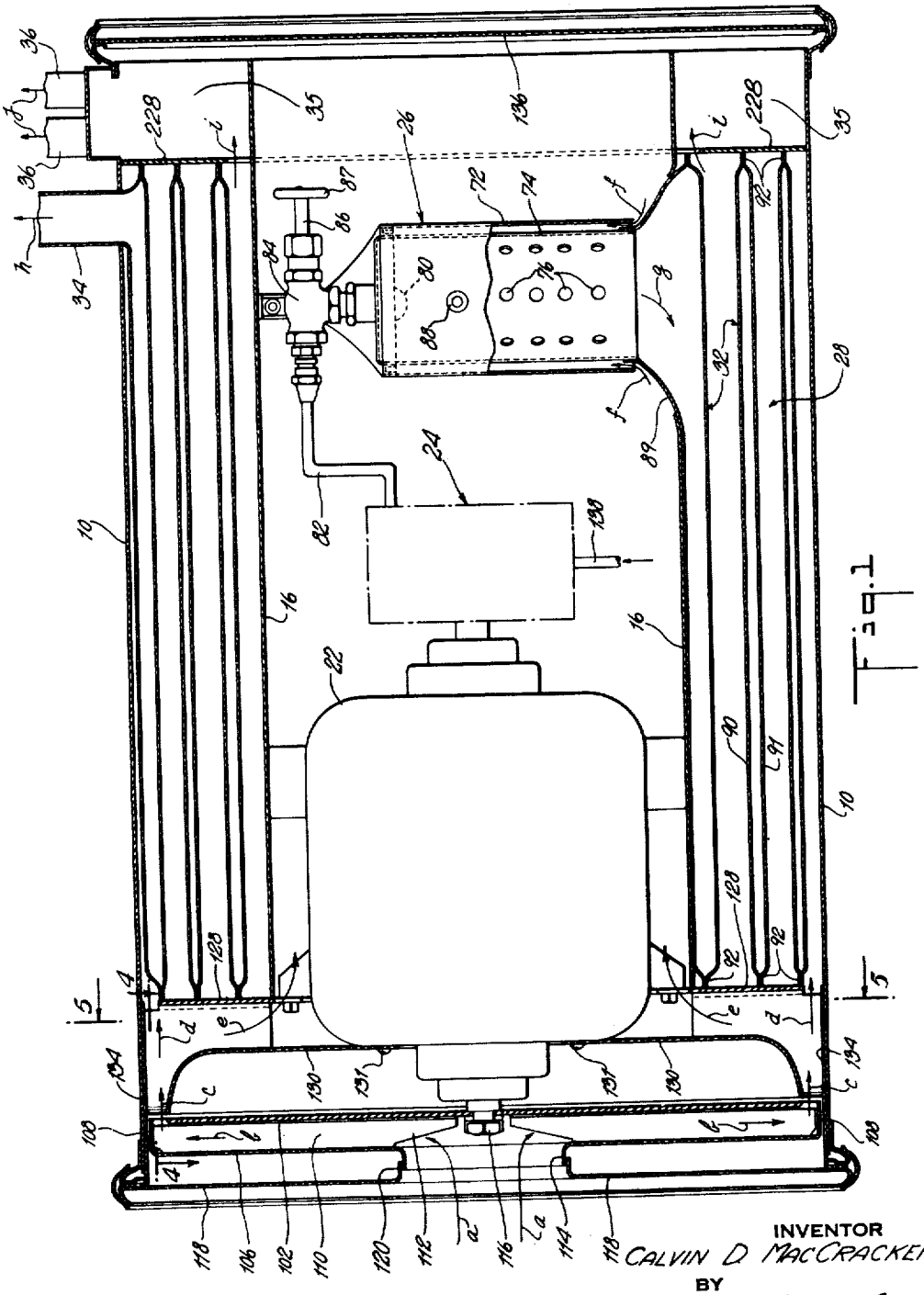

Fig. 1

INVENTOR
CALVIN D MACCRACKEN
BY
Williams, Rick & Lucas
ATTORNEYS

Nov. 22, 1949 C. D. MacCRACKEN 2,488,548

FORCED-AIR HOUSE HEATING APPARATUS

Filed June 22, 1946 4 Sheets-Sheet 2

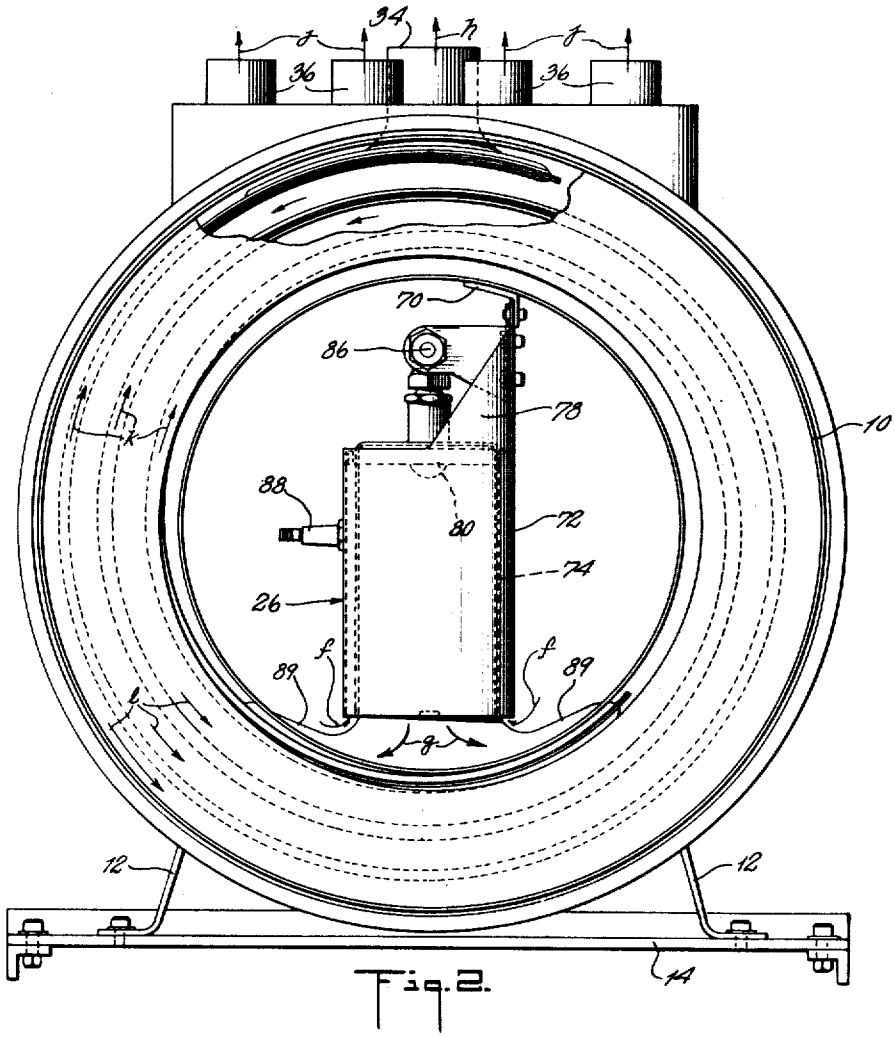

Fig. 2.

INVENTOR
CALVIN D. MAC CRACKEN
BY
Williams, Rich & Thorne
ATTORNEYS

Nov. 22, 1949 C. D. MacCRACKEN 2,488,548

FORCED-AIR HOUSE HEATING APPARATUS

Filed June 22, 1946 4 Sheets-Sheet 3

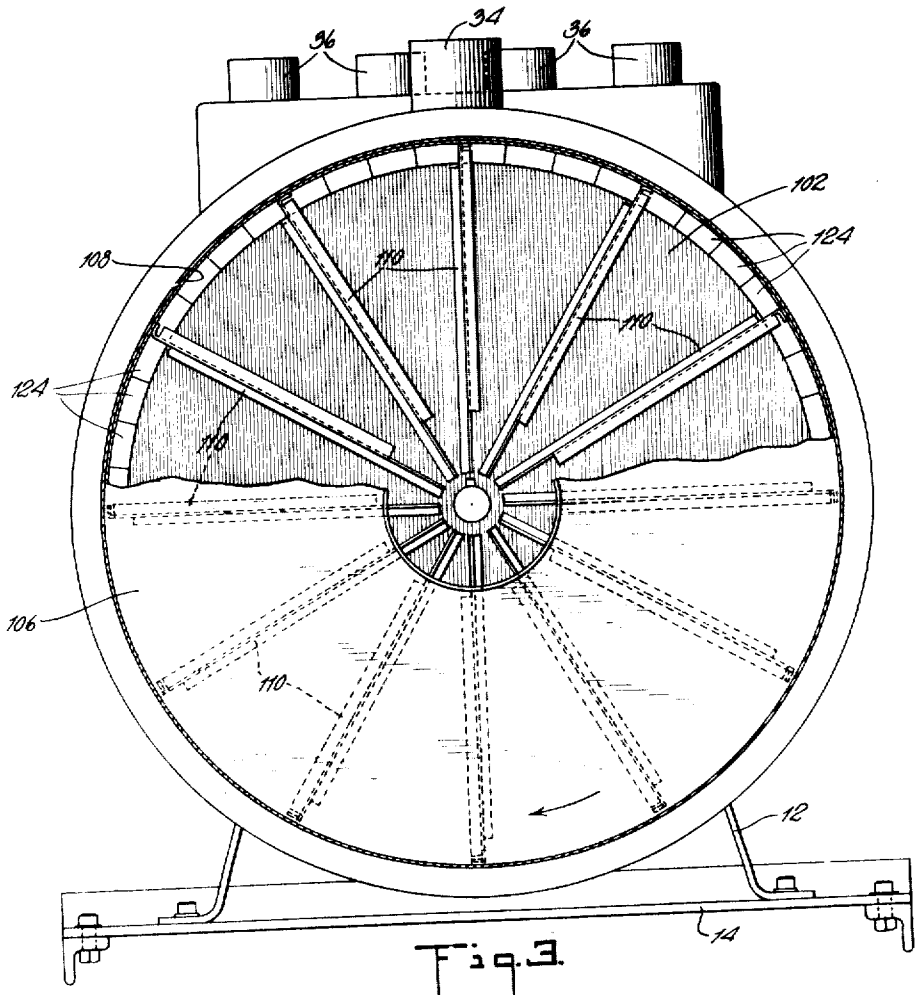

Fig. 3.

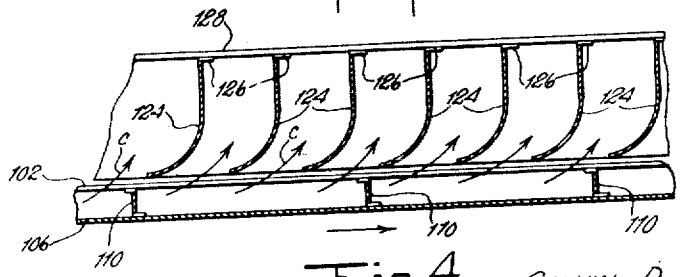

Fig. 4.

INVENTOR.
CALVIN D MAC CRACKEN
BY
Williams, Rick & Thomas
ATTORNEYS

Nov. 22, 1949 C. D. MacCRACKEN 2,488,548

FORCED-AIR HOUSE HEATING APPARATUS

Filed June 22, 1946 4 Sheets-Sheet 4

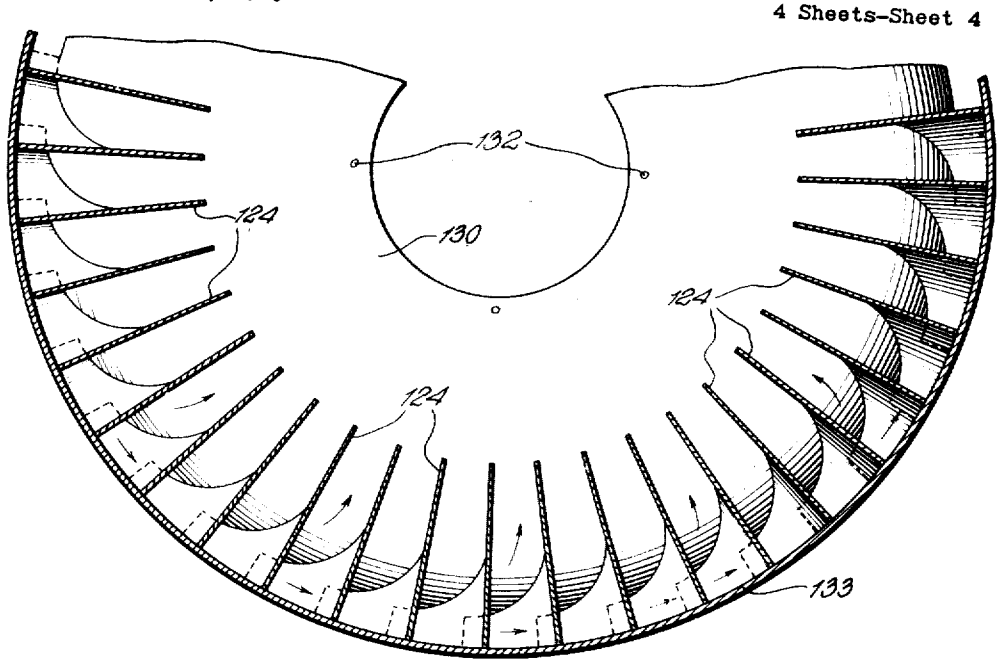

Fig. 5.

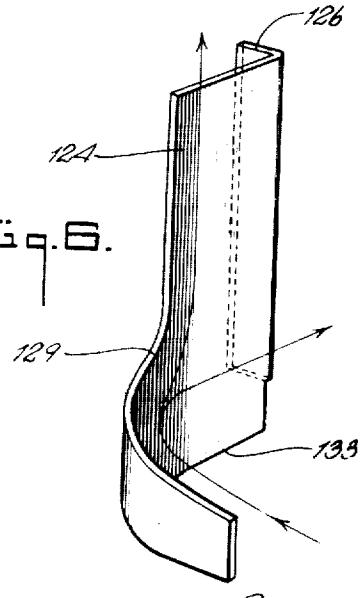

Fig. 6.

INVENTOR
CALVIN D. MAC CRACKEN
BY
Williams, Rick & Thomas
ATTORNEYS

Patented Nov. 22, 1949 2,488,548

UNITED STATES PATENT OFFICE

2,488,548

FORCED-AIR HOUSE HEATING APPARATUS

Calvin D. MacCracken, New Rochelle, N. Y., assignor, by direct and mesne assignments, to Jet-Heet, Inc., New York, N. Y., a corporation of New York

Application June 22, 1946, Serial No. 678,627

5 Claims. (Cl. 126—110)

1

This invention relates to house-heating apparatus, and particularly to a new and improved apparatus for supplying and distributing warmed air to the various rooms of a dwelling-house or other building.

For many years it has been customary to supply, to the various rooms of a building, air that has been heated to moderate temperatures, for example 100° to 200° F., in a so-called "hot-air furnace" utilizing coal, wood, oil or gas as the fuel; and the heated air has been distributed to the various rooms through ducts of considerable cross-sectional area, at very low pressures and velocities even when the tendency of the heated air to rise in the distributing ducts is accelerated by a fan or fans. Such systems of heating are necessarily expensive initially and inefficient in operation. They are initially expensive principally because they require a furnace of considerable size and a chimney, and because the ducts leading from the furnace to the rooms are large, costly and expensive to install. Such hot air heating systems are inefficient because (among other reasons) a large part of the heat produced by the fuel escapes with the gases which go up the chimney.

The general object of the invention is to provide a new and improved air-heating and distributing apparatus which is compact and simple in construction, highly efficient, cheap to manufacture, quick in operation, adapted to modulated control, requires no chimney, and distributes heated air at considerable pressure and high velocity through small conduits which are capable of being inserted in the walls of a building with much less expense than the comparatively large conduits now customarily used.

The invention will be understood from the following description taken in connection with the accompanying drawings which illustrate the invention and in which Fig. 1 is a longitudinal sectional elevation of an air heating device embodying the invention; Fig. 2 is an elevation of the right end of the device shown in Fig. 1, with the end cover plate removed and with a portion of the casing broken away to show a portion of the heat-exchange element; Fig. 3 is an elevation of the left end of the device shown in Fig. 1, with the end casing removed and a portion of the shroud of the rotor of the air compressor broken away; Fig. 4 is a fragmentary section on the line 4—4 of Fig. 1 looking in the direction of the arrows; Fig. 5 is a fragmentary sectional elevation on the line 5—5 of Fig. 1 looking in the direction of the arrows; and Fig. 6 is a perspective view of

2

one of the fixed deflectors which direct the air after it leaves the rotor of the air compressor.

Referring to Fig. 1, in which the heating apparatus is shown, it will be evident that the cylindrical casing 10 encloses the parts which cooperate to supply hot air at considerable pressure and high velocity to distributing arrangements of pipes and air-injector devices such, for example, as the one illustrated in my divisional application Ser. No. 60,987, filed Nov. 19, 1948. As shown in Figs. 2 and 3, the casing 10 may be supported on brackets 12 attached to base members 14. The various parts of the device shown in Fig. 1 are supported within the casing 10 within which is also a cylindrical inner shell 16 which is concentrically arranged with reference to the casing 10, thereby providing an annular chamber between said casing and shell which is bonded at the ends by end walls consisting of the end frame 228 and plate 128 hereinafter mentioned. It will be noted that the end wall 128 has an opening (or openings) near its outer edge, and that the end wall 228 has an opening (or openings) near its inner edge, through which respectively the air to be heated enters and leaves the heat-exchanger as hereinafter described.

The principal elements of the device shown in Fig. 1 are an electric motor 22 which drives the rotor of the air-compressor shown at the left of that figure, an oil pump 24, a fuel burner 26 which is supplied by said oil pump, and a heat-exchange device indicated at 28 and hereinafter described. The motor 22 and fuel pump 24 may be of any well known and suitable kind and need not be described; but the air compressor, fuel burner 26 and the heat-exchange device 28 are of novel construction and will be hereinafter described, although they can be claimed only in separate applications in order to satisfy what are understood to be the requirements of the Patent Office. See my copending application Ser. No. 716,365, filed December 14, 1946, and now matured into Patent No. 2,462,518, dated February 22, 1949, and Reissue Patent No. 23,126, dated June 21, 1949; application Ser. No. 731,831, filed March 1, 1947; and application Ser. No. 60,987, filed November 19, 1948.

Before proceeding with a detailed description of the apparatus shown in the drawings, it will be helpful to an understanding of the invention if the functioning of the heating apparatus is first generally described. Referring to Fig. 1, it will be apparent that the air to be heated enters the compressor at the left of that figure as indicated by the arrows *a*. The air passes radially outward

on the rotor of the compressor, as indicated by the arrows *b*; and then flows axially, as indicated by arrows *c*, into the space between the fixed vanes (particularly shown in Figs. 4, 5 and 6 and hereafter described) by which the air is delivered to two paths indicated by the arrows *d* and *e*. The compressed air in the path indicated by the arrow *e*, although it is only a minor part, for example about 20% of the air delivered by the air compressor, is sufficient to support substantially complete combustion of the fuel in the fuel burner **26** and also to dilute with air the gaseous products of combustion which pass from the fuel burner into the hollow heating element **32** of the heat-exchange device **28** and reduce the temperature of the mixture to a temperature of, say, 1500° F. The compressed air on its way to the fuel burner **26**, which it enters as shown by the arrow *f*, also serves the useful purpose of cooling the motor **22**, fuel pump **24**, and other parts within the shell **16**. The gaseous products of combustion and excess air which pass from the fuel burner, as indicated by the arrow *g*, into the heating element **32** of the heat-exchange device, give up so much of their heat in the latter that the temperature of the mixture of gaseous products of combustion and excess air which passes out through the exhaust pipe **34**, as indicated by the arrow *h* is quite moderate, for example, 130° to 250° F. Moreover, owing to substantially complete combustion of the fuel in the fuel burner, and the great amount of excess air supplied to the fuel burner, the exhaust gases which pass through the heating element **32** of the heat-exchange device and out through the pipe **34** are substantially free of carbon monoxide, and may be safely allowed to escape at any suitable place outside the building either directly or through a chimney flue. The draft of a chimney is not required since there is adequate pressure to drive the exhaust gas out through a small pipe. The exhaust gases can even be used for space heating of an outbuilding, such as garage, barn, etc.

The compressed air flowing at high velocity in the path indicated by the arrow *d*, which is the major part of the air supplied by the air compressor, passes through the heat-exchange device **28** where it is heated to a high temperature by contact with the heating element **32**, for example, 250° to 400° F., and then passes out of the heat-exchange device through an opening or openings in the end frame or wall **228**, as indicated by the arrows *i*, into an annular space **35** at the right-hand end of the heating device, and then still at high velocity out through the comparatively small distributing pipes **36** as indicated by the arrows *j*. In passing through the heat-exchange device, this air serves the useful purpose of preventing the casing **10** from reaching a temperature which is only slightly higher than the temperature of the air which is supplied by the air-compressor to the heat-exchange device. The hot air thus supplied by the apparatus shown in Fig. 1 to the pipes **36** may be diluted with cooler air and distributed to the rooms of a house or other building in any suitable way, for example, the manner described in my divisional application Ser. No. 60,987.

Referring again to Figs. 1 and 2, the fuel burner **26** will now be described. This fuel burner is supported from the shell **16** on a bracket **70** attached to the latter in any suitable way. The fuel burner comprises an outside cylindrical shell **72** and a concentrically located inner shell **74** which forms the combustion chamber and is provided with holes **76**, said inner shell **74** being preferably made of stainless steel. These shells **72** and **74** are supported on a bracket **78** bolted to the bracket **70**. The closed upper end of the inner shell **74** carries an atomizing fuel nozzle **80** to which oil is supplied by the oil pump **24** through the pipe **82** and a valve **84** controlled by manipulation of the valve stem **86** by the handle **87** or other means. A spark plug **88**, mounted in the outer shell **72** and projecting into the combustion chamber within the inner shell **74**, serves to ignite the fuel which enters the combustion chamber through the fuel nozzle **80** and is mixed with the air which enters the annular space between the shells **72** and **74**, as indicated by the arrows *f*, and passes into the inner shell **74** through the holes **76**. The open bottom of the inner shell **74** is connected to the heating element **32** of the heat-exchange device by a flared sliding connection shown at **89** in Figs. 1 and 2, thereby providing the path indicated by the arrows *g* for the gaseous products of combustion and excess air which leave the combustion chamber of the fuel burner and enter the heating element **32** of the heat-exchange device through which they travel in the direction indicated by the arrows *k* in Fig. 2.

From Figs. 1 and 2, it will be apparent that the heating element **32** of the heat-exchange device **28** consists of metal sheets **90** and **91** preferably of stainless steel formed as shown and welded together at their edges **92**, arranged spirally within the annular chamber between the outer casing **10** and the cylindrical shell **16** with the edges **92** of the hollow heating element **32** adjacent or in contact with the end walls **128** and **228**, in the manner shown in the drawings, which allows space through which the compressed air supplied by the air compressor freely passes, in a direction counter to that of the exhaust gas, as indicated in Fig. 2 by the arrows *l*. It will be understood that the air to be heated enters the outer portion of the device at the left end as indicated by the arrows *d*, and leaves the inner portion of the heat-exchange device at the right end as indicated by the arrows *i*. After giving up a large part of their heat through walls of the heating element **32**, the hot gases escape from the heating element through the exhaust pipe **34** which is attached to the latter as shown in Figs. 1 and 2.

It will be noted from the bottom portion of Fig. 1 that, owing to the shape of the heating element **32**, the cross-sectional area of the passage traversed by the air being heated constantly increases in the direction of air flow; and that the cross-sectional area of the passage in the heating element **32** traversed by the exhaust gases constantly decreases in the direction of gas flow. This is an advantageous arrangement, because it maintains essentially constant the velocities of the air flow and gas flow, and produces a maximum heat transfer with a given surface area with a minimum pressure drop in the air and gases.

While the heating element **32**, shown in Figs.1 and 2, is believed to be particularly advantageous for many reasons, including low cost of manufacture and assembly, adaptability to use of stainless steel, constant velocity of air and gas flow and its ability to expand and contract under the influence of wide changes of temperature, other forms of heating element may be employed within the annular spaces between the casing **10** and the cylindrical shell **16** which provides separate paths through the heat-exchange device

for the hot gaseous products of the fuel burner, and for the air which is supplied to the heat-exchange device by the air compressor, these paths being in a direction counter to one another in order to secure the maximum heat transfer.

With the aid of Figs. 1 and 3 to 6, the novel air compressor therein illustrated will now be described. This air compressor is described and claimed in my application Ser. No. 716,365. The rotor of the air compressor, which is secured to the shaft of the motor 22 and is driven thereby comprises a disc or plate 102 in the center of which is a splined hole, a shroud 106 provided with a flanged edge 108 having a diameter somewhat greater than the diameter of the plate 102, and radially arranged blades or vanes 110 located between the disc 102 and the shroud 106 and secured thereto. As shown in Figs. 3 and 4, the vanes 110 are bent over at their edges to provide flanges which are riveted or welded to the disc 102 and to the shroud 106, but any other composite structure of these parts may be employed. As shown in Fig. 1, the vanes 110 are beveled as indicated at 112; and the shroud 106 is provided at its center with an opening bounded by a flange 114. The axial splined hole in the disc 102 of the rotor fits the shaft of the motor 22 and is secured thereto by a nut 116, a key being provided in the usual way to prevent relative rotation of the rotor and motor shaft. An end casing 118, having a central opening surrounded by a flange 120 having a diameter slightly larger than the diameter of the flange 114 on the shroud 106, is removably secured to the casing 10 by the construction shown or in any other suitable way. The stator of the air compressor, which receives the air delivered by the rotor through the space between the edge of the disc 102 and the flange of the shroud 106, will be understood from Figs. 1 and 3 to 6. It will be apparent that the stator contains stationary vanes 124 the shape of which will be evident from Fig. 6. Each of these vanes 124 is provided with a flange 126 which is welded or otherwise secured to a plate 128, the radial arrangement of the vanes 124 being apparent from Fig. 5. Cooperating with the edges 129 of the vanes 124 is a cup-shaped shoud 130 (Figs. 1 and 5) having a central opening the margin of which cooperates with the motor casing to which the shroud 130 is secured by screws 131 passing through holes 132 in said shroud. The edges 133 of the vanes 124 abut a shell 134 which lies against the inside of the outer shell 10. It will be apparent from Figs. 1, 4 and 5 how the vanes 124 of the stator receive the compressed air delivered by the rotor, change its direction and velocity and direct it into the paths represented by the various arrows in Figs. 4, 5 and 6 and by the arrows *d* and *e* in Fig. 1. The stator vanes 124 shown in the drawings are particularly suited to the use of the air compressor in connection with the air-heating device which is herein illustrated and described; but it will be understood that the form of the vanes may be different when the air compressor is employed in other connections and for other purposes.

In Fig. 1, the right end of the casing 10 is closed by a circular cover plate 136 which is removably attached to the casing 10 by the construction shown or in any other suitable manner. The fuel pump 24 is shown as supplied with fuel through a pipe 138; and the spark plug 88 by which the fuel is ignited is of course connected to a suitable electrical source. It will also be understood that, of course, the air heating apparatus shown in the drawings may be used with means

for filtering or otherwise purifying the air entering the compressor, with means for humidifying the hot air delivered by the heating apparatus, with means for automatically controlling the apparatus so as to modulate the temperature and quantity of the hot air supplied by the apparatus, and with other devices. Since these auxiliary means may be of many suitable kinds, they are not described in this specification.

The house-heating apparatus which is the subject of the present invention affords important advantages over apparatus of the kinds heretofore used, some of these advantages being hereinbefore referred to. In such prior house-heating apparatus of the oil-burning or gas-burning types, there is usually a large box-like combustion chamber, usually lined with a refractory material, through which air and the products of combustion pass at low velocity. In such combustion chambers the heat-release space rates of combustion are low, for example, usually considerably less than 150,000 B. t. u. per cubic foot of combustion space per hour.

In house-heating apparatus embodying the present invention, however, the heat-release space rate of combustion is far higher than the rate just mentioned, for example, 1,500,000 B. t. u. per cubic foot of combustion space per hour or higher. This high heat-release space rate of combustion, however, necessitates the use of considerable power to drive the air compressor to make up for the relatively high pressure drop in the combustion chamber. This pressure drop is caused by the increased velocities and turbulence of the air required to obtain the high heat-release space rate. Nevertheless, there are important advantages due to the facts that the combustion is far less sensitive to changes in the kind and quantity of the fuel, to changes in the temperature and velocity of the air fed to the fuel burner, to changes in air-fuel ratio, etc., than in the case of fuel burners heretofore used having a low heat-release space rate of combustion. Other advantages resulting from the use of the high heat-release space rate of combustion in the fuel burner employed in apparatus embodying the present invention, are due to the facts that the excess air supplied to the fuel burner insures more complete combustion and permits the use of an all-steel small combustion chamber, combustion noise is reduced, the same fuel burner can be adapted to burn gaseous as well as liquid fuel, and the danger from explosions is greatly reduced due to the small size of the combustion chamber. For these reasons, and others, the high heat-release space rate of combustion employed in the present invention is extremely advantageous in a house-heating apparatus, in spite of the greater power required to drive the air compressor to make up for higher pressure drop in the combustion chamber in comparison with previous house-heating apparatus.

Therefore, an important and novel feature of the present invention is the use of a fuel burner having a high heat-release space rate of combustion, for supplying heat to a heat-exchange device in which the air to be distributed for house-heating purposes is heated. Another important feature of the present invention is the use of a single air-compressor which not only supplies compressed air to the fuel burner for supporting the high heat-release space rate of combustion, but also supplies the air which is heated in the heat-exchange device and may be distributed at considerable pressure and at high velocity through

comparatively small conduits or pipes as has been described.

The terms "at considerable pressure and at high velocity" as used in this specification, are intended to mean pressures as great as about 1 inch to 2 inches of water, and velocities as great as 1000 or more feet per minute. In conventional hot air heating systems as heretofore employed, the pressure of the heated air is exceedingly low, for example, usually less than about 0.1 of an inch of water; and the velocity at which the air is distributed is also very low, for example, generally less than 500 feet per minute, even when the flow of air is produced by a fan, and is even less when the air flows by gravity.

What is claimed is:

1. A unit for supplying hot air at considerable pressure comprising an outer casing; an inner shell concentrically arranged within and spaced from said outer casing; end walls cooperating with said casing and shell, thereby providing an annular chamber between said casing and shell, one of said end walls having an opening near its outer edge and the other end wall having an opening near its inner edge; an atomizing type fuel-burner located within but structurally independent of said shell; a hollow heating element spirally arranged in said annular chamber with the edges of said heating element in contact with said walls and thus providing internally a spiral path for the products of combustion and externally in said annular chamber a spiral path in the opposite direction for air to be heated, said heating element being connected at one end to said fuel-burner so as to receive internally therefrom the products of combustion and at the other end to an exhaust pipe; a motor-driven air-compressor located adjacent one end of said casing and supplying compressed air through the opening in the outer edge of the adjacent end wall of said chamber to the last-mentioned spiral path through which said air flows in a direction counter to the direction of the flow of the products of combustion within said heating element, whereby said air is heated to a high temperature by contact with said heating element; means cooperating with said air-compressor for directing enough of the compressed air into the end of said inner shell and to said fuel-burner to provide an excess of air for combustion of the fuel; and a conduit connecting with the opening in the inner edge of the other end wall of said annular chamber through which conduit the hot air is supplied by the unit.

2. A unit for supplying hot air at considerable pressure comprising an outer casing; an inner shell concentrically arranged within and spaced from said outer casing; end walls cooperating with said casing and shell, thereby providing an annular chamber between said cas- wall having an opening near its inner edge; an opening near its outer edge and the other end wall having an opening near its iner edge; an atomizing type fuel-burner located within but structurally independent of said shell; a hollow heating element spirally arranged in said annular chamber with the edges of said heating element in contact with said walls and thus providing internally a spiral path for the products of combustion, and externally in said annular chamber a spiral path in the opposite direction for air to be heated, said heating element being connected at one end to said fuel-burner so as to receive internally therefrom the products of combustion and at the other end to an exhaust pipe; an electric motor located within said shell; an oil pump driven by said motor and located within said shell and supplying oil to said fuel-burner; an air-compressor driven by said motor and located adjacent one end of said casing and supplying compressed air through the opening in the outer edge of the adjacent end wall of said chamber to the last mentioned spiral path through which said air flows in a direction counter to the flow of the products of combustion within said heating element, whereby said air is heated to a high temperature by contact with said heating element; means cooperating with said air-compressor for directing enough of the compressed air into the end of said inner shell and into cooling engagement with said motor and to said fuel-burner to provide an excess of air for combustion of the fuel; and a conduit connecting with the opening in the inner edge of the other end wall of said annular chamber through which conduit the hot air is supplied by the unit.

3. A unit for supplying hot air at considerable pressure comprising an outer casing; an inner shell arranged within and spaced from said outer casing; end walls cooperating with said casing and shell, thereby providing a chamber between said casing and shell, one of said end walls having an opening near its outer edge and the other end wall having an opening near its inner edge; a fuel-burner located within said shell; a hollow heating element spirally arranged in said chamber with the edges of said heating element located adjacent said walls and thus providing internally a spiral path for the products of combustion and externally in said chamber a spiral path in the opposite direction for air to be heated, said heating element communicating at one end with said fuel-burner so as to receive internally therefrom the products of combustion and at the other end to an exhaust pipe; an air-compressor located adjacent one end of said casing and supplying compressed air through the opening in the outer edge of the adjacent end wall of said chamber to the last-mentioned spiral path through which said air flows in a direction counter to the direction of the flow of the products of combustion within said heating element, whereby said air is heated to a high temperature by contact with said heating element; means cooperating with said air-compressor for directing enough of the compressed air into the end of said inner shell and to said fuel-burner to provide an excess of air for combustion of the fuel; and a conduit communicating with the opening in the inner edge of the end wall of said annular chamber through which conduit the hot air is supplied by the unit.

4. A unit for supplying hot air at considerable pressure comprising an outer casing; an inner shell arranged within and spaced from said outer casing; end walls cooperating with said casing and shell, thereby providing an annular chamber between said casing and shell, one of said end walls having an opening near its outer edge and the other end wall having an opening near its inner edge; a fuel-burner located within said shell; a hollow heating element spirally arranged in said annular chamber with the edges of said heating element located adjacent said end walls thus providing internally a spiral path for the products of combustion, and externally in said annular chamber

a spiral path in the opposite direction for air to be heated, said heating element being connected at one end to said fuel-burner so as to receive internally therefrom the products of combustion and at the other end to an exhaust pipe; an electric motor located within said shell; an air-compressor driven by said motor and located adjacent one end of said casing and supplying compressed air through the opening in the outer edge of the adjacent end wall of said chamber to the last mentioned spiral path through which said air flows in a direction counter to the flow of the products of combustion within said heating element, whereby said air is heated to a high temperature by contact with said heating element; means cooperating with said air-compressor for directing enough of the compressed air into the end of said inner shell and into cooling engagement with said motor and to said fuel-burner to provide an excess of air for combustion of the fuel; and a conduit connecting with the opening in the inner edge of the other end wall of said annular chamber through which conduit the hot air is supplied by the unit.

5. A unit for supplying hot air at considerable pressure comprising an outer casing, an inner shell arranged within and spaced from said outer casing, end walls having respectively inlet and outlet openings and cooperating with said casing and shell and defining the length of the annular chamber between said casing and shell, a hollow heating element spirally arranged in said annular chamber with its edges located adjacent said end walls thereby providing a pair of spiral passages one of which is within said hollow heating element and the other of which is outside it, an air compressor supplying a portion of its compressed air to the interior of said shell and another portion of its compressed air through the inlet opening in one of the end walls to the spiral passage formed in the annular chamber outside of the hollow heating element, fuel-burning means located within said shell and receiving the air supplied to the interior of said shell and supplying hot products of combustion to the inside of the hollow heating element whereby the compressed air passing through the annular chamber in the spiral path defined by the hollow heating element is heated by contact with the latter, conduit means through which the hot products of combustion are discharged from said hollow heating element, and conduit means receiving from the annular chamber through the outlet opening in the other end wall the air which is heated in the annular chamber.

CALVIN D. MacCRACKEN.

REFERENCES CITED

The following references are of record in the file of this patent:

UNITED STATES PATENTS

Number	Name	Date
1,519,673	Doble	Dec. 16, 1924
1,991,449	Cornelius	Feb. 19, 1935
2,058,254	Pederson	Oct. 20, 1936
2,156,101	Willet	Apr. 25, 1939
2,205,451	Woolery	June 25, 1940
2,231,826	Foss	Feb. 11, 1941
2,314,089	Hess et al.	Mar. 16, 1943
2,332,969	Higley	Oct. 26, 1943
2,379,018	McCollum	June 26, 1945