Office de la Propriété Intellectuelle du Canada
Un organisme d'Industrie Canada

Canadian Intellectual Property Office
An agency of Industry Canada

CA 2205958 C 2001/07/10

(11)(21) 2 205 958

(12) BREVET CANADIEN
CANADIAN PATENT

(13) C

(86) Date de dépôt PCT/PCT Filing Date: 1996/07/23
(87) Date publication PCT/PCT Publication Date: 1997/04/03
(45) Date de délivrance/Issue Date: 2001/07/10
(85) Entrée phase nationale/National Entry: 1997/05/23
(86) N° demande PCT/PCT Application No.: DE 96/01395
(87) N° publication PCT/PCT Publication No.: WO 97/11749
(30) Priorité/Priority: 1995/09/25 (295 15 302.4) DE

(51) Cl.Int.^{6}/Int.Cl.^{6} A61N 2/06

(72) Inventeur/Inventor:
BAERMANN, Horst, DE

(73) Propriétaire/Owner:
BAERMANN MAGNETICS INC., US

(74) Agent: RIDOUT & MAYBEE

(54) Titre : SYSTEME MAGNETIQUE DESTINE A UN USAGE THERAPEUTIQUE
(54) Title: MAGNETIC ARRANGEMENT FOR THERAPEUTIC APPLICATION

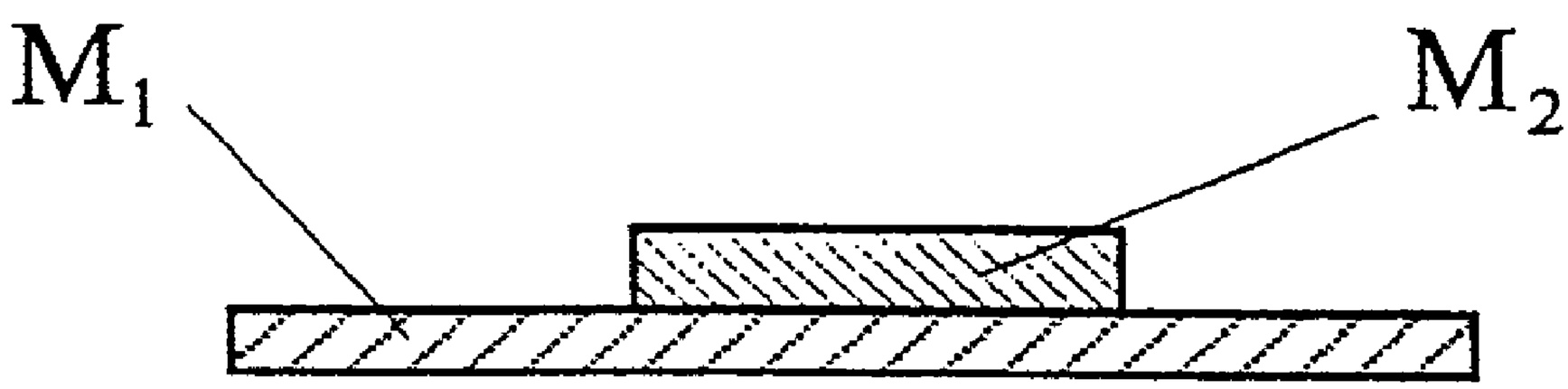

(57) Abrégé/Abstract:
The object of the invention is a magnet arrangement for the treatment of skin or tissue regions of the human body close to the surface, having several mechanically connected magnetic mouldings (M_1, M_2) forming an effective surface at or near which use is made of the magnetic field there. Use has long been made in therapeutics of flexible magnets of plastic-bonded hard ferrite having at least one north and one south pole on their effective surface facing the patient, where the pole configuration is differently arranged in accordance with the therapeutic purpose. It is thus possible to generate magnetic inductance only in regions of the skin or tissues close to the surface. A magnet arrangement of several magnetic mouldings of high coercive field strength with different energy densities is proposed to attain locally limited higher magnetic inductances.

PCT

WELTORGANISATION FÜR GEISTIGES EIGENTUM
Internationales Büro

INTERNATIONALE ANMELDUNG VERÖFFENTLICHT NACH DEM VERTRAG ÜBER DIE INTERNATIONALE ZUSAMMENARBEIT AUF DEM GEBIET DES PATENTWESENS (PCT)

(51) Internationale Patentklassifikation 6 : A61N 2/06

A1

(11) Internationale Veröffentlichungsnummer: WO 97/11749

(43) Internationales Veröffentlichungsdatum: 3. April 1997 (03.04.97)

(21) Internationales Aktenzeichen: PCT/DE96/01395

(22) Internationales Anmeldedatum: 23. Juli 1996 (23.07.96)

(30) Prioritätsdaten:
295 15 302.4 25. September 1995 (25.09.95) DE

(71) Anmelder *(für alle Bestimmungsstaaten ausser US)*: RHEIN-MAGNET HORST BAERMANN GMBH [DE/DE]; Ohlenhohnstrasse 23, D-53819 Neunkirchen (DE).

(72) Erfinder; und
(75) Erfinder/Anmelder *(nur für US)*: BAERMANN, Horst [DE/DE]; Am Branderhof 9, D-51429 Bergisch Gladbach (DE).

(74) Anwälte: LIPPERT, H.-J. usw.; Frankenforster Strasse 135-137, D-51427 Bergisch Gladbach (DE).

(81) Bestimmungsstaaten: AU, CA, JP, MX, US, europäisches Patent (AT, BE, CH, DE, DK, ES, FI, FR, GB, GR, IE, IT, LU, MC, NL, PT, SE).

Veröffentlicht
Mit internationalem Recherchenbericht.

(54) Title: MAGNET ARRANGEMENT FOR THERAPEUTIC USE

(54) Bezeichnung: MAGNETANORDNUNG ZUR THERAPEUTISCHEN ANWENDUNG

(57) Abstract

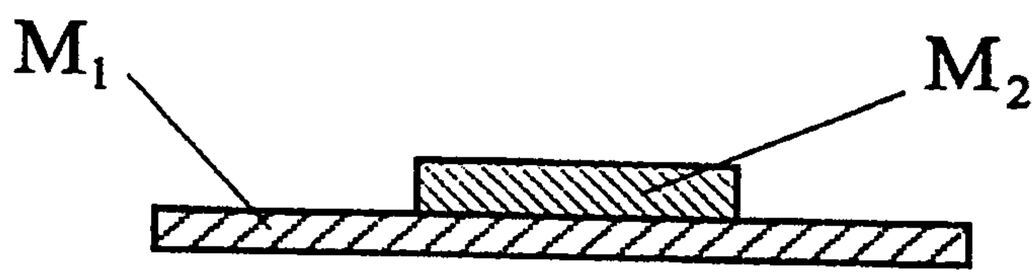

The object of the invention is a magnet arrangement for the treatment of skin or tissue regions of the human body close to the surface, having several mechanically connected magnetic mouldings (M_1, M_2) forming an effective surface at or near which use is made of the magnetic field there. Use has long been made in therapeutics of flexible magnets of plastic-bonded hard ferrite having at least one north and one south pole on their effective surface facing the patient, where the pole configuration is differently arranged in accordance with the therapeutic purpose. It is thus possible to generate magnetic inductance only in regions of the skin or tissues close to the surface. A magnet arrangement of several magnetic mouldings of high coercive field strength with different energy densities is proposed to attain locally limited higher magnetic inductances.

(57) Zusammenfassung

Gegenstand der Erfindung ist eine Magnetanordnung zur Behandlung oberflächennaher Haut- oder Gewebebereiche des menschlichen Körpers mit mehreren mechanisch zusammenhängenden magnetischen Formkörpern (M_1, M_2), die eine wirksame Oberfläche bilden, an der oder in deren Nähe das dort vorhandene magnetische Feld zur Anwendung kommt. In der Therapeutik finden seit längerem flexible Magnete aus kunststoffgebundenem Hartferrit Anwendung, die auf ihrer dem Körper zugewandten wirksamen Oberfläche wenigstens einen Nord- und einen Südpol aufweisen, wobei die Polkonfigurationen entsprechend der therapeutischen Zielsetzung unterschiedlich gestaltet sind. Hiermit ist die Erzielung von magnetischen Induktionen nur in oberflächennahen Haut- bzw. Gewebebereichen möglich. Zur Erzielung lokal begrenzter höherer magnetischer Induktionen wird eine Magnetanordnung aus mehreren magnetischen Formkörpern hoher Koerzitiv-Feldstärke unterschiedlicher Energiedichte vorgeschlagen.

Magnetic Arrangement for Therapeutic Application

The invention refers to a magnetic arrangement for therapeutic application, particularly for the treatment of surface near skin or tissue areas of the human body, of one or more mechanically connected magnetic bodies which build an active surface on, or in, the vicinity of which the magnetic field there present is utilized.

Such known magnetic arrangements are, for example, shown in homogeneous permanent magnetic strips, which are magnetized with one or more poles, or in certain forms of discretely arranged permanent magnets of identical magnetic material. The permanent magnets or permanent magnetic strips may be rigid magnets, made for example of sintered hard ferrite or, also flexible magnets, for example of plastic bonded ferrite particles, whereby the particles, usually consisting of hard ferrite powder, are contained in the plastic matrix in statistically finely dispersed homogeneous form by, for example, mixing in stamping masticators. The geometrical shape, arrangement and magnetization of the magnetic bodies, as well as their magnetic material, are chosen to suit the intended application. The magnetic induction present at the active surface, or at a certain distance therefrom, is, in the case of the above mentioned magnetic arrangements, limited and in many cases it is desirable to increase the magnetic induction at, or in, the vicinity of the active surface.

Magnetic arrangements with alternating poles are known within the field of therapeutics for some time. They are rigid or flexible permanent magnets which have at least one pole on their active surface facing the body. For example, rigid magnets of this type, made of sintered hard ferrite, are largely used in Japan. Parallel to this, flexible magnets made of plastic bonded hard ferrite have been established within

the field of magnetic therapeutics in Europe and the USA since 1983. These have at least one North and one South pole on their active surface facing the body, whereby the pole configurations are arranged in different ways dependent upon the therapeutic objective and are marketed by the applicant of this patent under the trade names "BIOflex" and "VITAflex". Such magnetic foils are described under EP-PS 0 134 437, US-PS 4,549,532 and JP-PS P1 652 939. The basic effectiveness of such magnetic arrangements on the human organism could be proven within a double blind study carried out by Dr. Jens Martin, of the Klinik Bavaria in Schaufling.

For the magnets of the above trademark "BIOflex" which are applied for therapeutic purposes, maximum induction values of up to ca. 60 mT are obtained immediately on the surface of such magnets. However, the induction of at least 1 mT, required to obtain a therapeutically relevant effect, can thereby, depending upon the material thickness of such magnets, only be obtained at an airgap (identical to the penetration depth into the body) of up to maximum, 20 mm. Depending upon the therapeutic objective, higher magnetic inductions are desired not only in the skin or tissue areas near to the surface of the body, but also in the deeper areas of more than 7 mm, particularly however, of more than 15 mm, measured from the body surface.

However, higher magnetic inductions, particularly in the case of treating larger areas, are not always tolerable. Also, in many cases, it is desired to achieve punctate magnetically induced effects in deeper positioned areas of the body in order to obtain such effects which are known from acupuncture. Since, generally, the induction values decrease with the third power to the distance from the magnet, it is imperative to use magnets with particularly high surface area induction, in order to create a sufficiently high induction in the body areas which are deeper than 20 mm.

The invention is therefore based on the objective to create higher performance magnetic arrangements of the above mentioned type with which, in particular, high local induction values can be achieved in certain areas of the effective surface, as well as a higher penetration depth in these areas of the body.

In accordance with the invention the objective is achieved, when the magnetic arrangement of at least one first magnetic body, and at least one second magnetic body mechanically connected to the first is provided, whereby the magnetic bodies show a high coercive field strength and whereby the maximum value of the product B · H ($[BH]_{max}$-value) of the first magnetic body is lower than that of the second magnetic body and the two magnetic bodies build an active surface of the magnetic arrangement, reference the intended effect of the magnetic field.

Due to the invention's objective of combining magnetic bodies of different energy density into a system, or effective unit, a stronger magnetic flux is achieved in the area of the active surface of the higher energy density second magnetic body whereas being weaker in the area of the active surface of the lower energy density first magnetic body. Depending upon the geometrical shape, arrangement and magnetization of the magnetic bodies and the choice of magnetic material, higher magnetic inductions can thus be achieved in certain areas of the active surface, or at a distance from the same.

By using the magnetic arrangement in accordance with the invention, certain tissue sections for example can purposefully be treated with high induction and higher depth effect connected thereto. Certain acupuncture points of the living organism for example can thereby be treated purposefully. By increasing the induction in only certain areas, other sections of the body will, however, be spared from the effect of the stronger magnetic field.

By using the magnetic arrangement in accordance with the invention preferable therapeutic objectives can be achieved in surface near skin or tissue areas, as well as "simultaneous" in locally restricted areas with depth effect. Because both different magnets have as high a coercive field strength as possible and are connected to one another, counter influencing or weakening of the one magnetic material by the other can, in a preferable way, largely be avoided.

The invention includes the use of mechanically connected magnetic bodies with two or more different $[BH]_{max}$-values.

The different energy densities of the magnetic bodies are preferably achieved by using different magnetic materials. The magnetic body or bodies with lower energy densities for instance, consist of barium or strontium ferrite, whereas the magnetic bodies with higher energy densities are chosen from the group of rare-earth magnets, such as $SmCo_5$ or NdFeB.

It is preferable that the $[BH]_{max}$-value of the second magnetic body be at least twice as high as that of the first magnetic body. Particularly good effects were achieved with arrangements when the $[BH]_{max}$-value of the second magnetic body is at least fifteen times higher than that of the first magnetic body.

The second magnetic body of higher energy density may be embedded into the active surface of the first magnetic body of lower energy density. Thereby a jointly aligned active surface of both magnetic bodies can be achieved.

On the other hand, the second magnetic body may also be arranged in form of a flat piece on the active surface of the first magnetic body so that the active surfaces of both magnetic bodies are arranged staggered to one another. Since in most cases the magnetic induction becomes effective at some distance from the surface, this arrangement is usually easier to produce.

In accordance with the invention several magnetic bodies of higher energy density, also differing ones, may also be arranged into, or on, the active surface of the first magnetic body. The magnetic arrangement can also include several magnetic bodies of lower energy density in, or on, which magnetic bodies of higher energy density are affixed, as explained in the foregoing example.

The active surface of the second magnetic body, or the magnetic body of higher energy density, is preferably smaller than that of the first magnetic body, or the magnetic body with lower energy density.

In order to prevent the magnetic field from straying away from the area above the active surface it is appropriate that the vector sum of all magnetic fluxes on the active surface area of the magnetic arrangement be nearly zero.

The second magnetic body may for example be form-fit embedded into a space or bore hole in the first magnetic body and secured by known fixing methods, such as glueing, welding, or covering of both sides with a coating of glue, or similar. However, due to the magnetic stray fields, a form-fit embedding is not absolutely necessary. In order to create larger ambient straying of the magnetic field it may even be favourable to provide an airgap of suitable size between the two magnetic bodies.

In the case of separated arrangement of the magnetic bodies it is appropriate to connect these on the side opposite to the active surface by a ferro-magnetic retainer layer, of low carbon soft iron or a rigid or flexible layer of non-magnetizable material, such as, for example, non-magnetic stainless steel, aluminium or plastic, or of a combination of these components.

On the other hand, the magnetic bodies which are arranged spatially separated from one another, may also be connected to

one another on their active surface by a rigid or flexible layer of non-magnetizable material, for example by the above mentioned components. Therefore, rigid or elastic, or flexible layers are suitable. In addition to connecting the magnetic bodies they also serve the dimensional stability of the magnetic arrangement.

For securing the second magnetic body to the active surface of the first magnetic body it is also appropriate to provide for an intermediate layer of non-magnetizable material, such as a glue, a plastic layer or another optional non-magnetizable material, such as a fabric.

In accordance with the invention which is aligned to a largest possible straying effect of the magnetic field within the area above the active surface, such magnetic arrangements where the first magnetic body, or the magnetic bodies of lower energy density are magnetized in axial direction, i.e. vertical to their active surface are preferred. Thereby, depending upon the intended application, the magnetic body may have one or more poles on its active surface, possibly with alternating polarity and in optional arrangement. The bodies need not necessarily be magnetized in axial direction; the invention may be understood such, that any type of magnetization is feasible.

In accordance with a particularly preferred embodiment of the invention, such magnetic arrangements are suggested, whereby the first magnetic body is magnetized with one pole on its active surface, or consists of magnetic body segments with magnetized poles of identical type, arranged spaced apart from one another, and the second magnetic body, preferably several magnetic body segments of identical polarity on their active surfaces, formed in known geometrical figures and configurations, but which are of different polarity to those of the first magnetic body, embedded in the first magnetic body, or arranged between its poles, or fixed to its surface.

In general, the first magnetic body may also be magnetized on its active surface with several poles, or consist of magnetic body segments with magnetized poles of different polarity, arranged spaced apart from one another, whereby the second magnetic body, as described above, is arranged between two poles of the first magnetic body and the poles opposite to one another on both magnetic bodies having different polarity. In this case also, the magnetic arrangement consists of a pole configuration with poles of alternating polarity, whereby in the areas of the magnetic body, or magnetic bodies of higher energy density, higher magnetic induction is retained on the active surface, and whereby moreover the pole face of the magnetic bodies have the known geometrical shapes and arrangements, such as stripe-type, circular, radial, three or more cornered, segment, sickle or sun-wheel shaped or similar configurations.

Several examples of the invention's embodiments are explained in detail by drawings below. The drawings show:

Fig. 1 an embodiment of the magnetic arrangement for therapeutic purposes,

Fig. 2 a cross section along the line II-II in Fig. 1,

Fig. 3 a cross section through a second embodiment,

Fig. 4 a further embodiment of the magnetic arrangement,

Fig. 5 a variation of the embodiment according to Fig. 4,

Fig. 6 a further embodiment of the magnetic arrangement,

Fig. 7 a further embodiment of the magnetic arrangement,

Fig. 8 a plan-view of the magnetic arrangement according to Fig. 7,

Fig. 9 a variation of the embodiment according to Fig. 7,

Fig. 10 to Fig. 14
further embodiments of magnetic arrangements with differing pole configurations of the relevant bodies.

The magnetic arrangements shown in Fig. 1 to 3 consist of a first magnetic body M_1 and a second magnetic body M_2 mechanically connected thereto, whereby the two magnetic bodies M_1 and M_2 show a high coercive field strength, the $[BH]_{max}$-value of the first magnetic body M_1 being lower than that of the second body M_2 and the two magnetic bodies M_1 and M_2 building an active surface (surface of the magnetic arrangement shown in Figs. 1 to 3) with reference to the intended effect of the magnetic field. In the embodiment shown in Figs. 1 and 2, the second body M_2 is arranged on the active surface of the first body M_1 in the form of a flat piece.

In the embodiment shown in Fig. 3, the second magnetic body M_2 is embedded into the first magnetic body M_1 at its active surface.

In both embodiments the active surface of the second magnetic body M_2 is smaller than that of the first magnetic body M_1. As further demonstrated in Fig. 3, the vector sum of all magnetic fluxes is zero on the active surface of both magnetic bodies M_1 and M_2.

The following two examples show different magnetic materials for the magnetic bodies M_1 and M_2 and the appropriate values for the magnetic remanence B_r, the coercive field strength ${}_iH_c$ and the maximum magnetic energy product $[BH]_{max}$.

<u>Example 1:</u>

M_1 consists of isotropic plastic bonded NdFeB.

M_2 consists of plastic bonded isotropic Ba-ferrite.

	M_1	M_2
B_r [mT]	470	163
${}_iH_c$ [kA/m]	700	240
$[BH]_{max}$ [kJ/m^3]	35	4.5

Example 2:

M_1 consists of isotropic sintered NdFeB.

M_2 consists of anisotropic plastic bonded Sr ferrite.

	M_1	M_2
B_r [mT]	1,250	220
${}_iH_c$ [kA/m]	800	280
$[BH]_{max}$ [kJ/m^3]	280	9.0

The types of embodiments shown in Figs. 4 to 14 which are described below as examples, have proven to be particularly favourable for achieving a therapeutic effect. Thereby the magnetically higher value magnetic body M_2, consisting of a permanent magnetic material with elements of the group of rare-earths, such as NdFeB or $SmCo_5$, is in all cases smaller by area and volume than the magnetically lower value magnetic body M_1, which, for example, consists of Sr-ferrite.

In the embodiment examples circular or disc-shaped magnets are used. However, also optional other geometrical shapes, such as ovals, rectangulars, five, six or more cornered pieces, or other symmetrical or also asymmetrical tabular forms may be used.

In the magnetic arrangements shown in Figs. 4 and 5, at least one magnetic body M_2 of higher energy density is arranged on the surface of a magnetic body M_1 of lower energy density by either direct contact (Fig. 4) or, in special cases, also by an intermediate layer Z_1, such as a glue, a plastic layer or other optional non-magnetizable medium, such as a fabric (Fig. 5).

The magnetic arrangement as per Fig. 6, having already been basically described in Fig. 3, shows at least one magnetic body M_2 of higher energy density, being integrated into a magnetic body M_1 of lower energy density. The magnetic body M_2 is inserted into a bore hole in magnetic body M_1 and there affixed by suitable fixing methods, such as glueing, welding, or covering of both sides with small self-adhesive discs, or similar.

In order to obtain larger ambient straying of the magnetic field, a gap is provided between the magnetic bodies M_1 and M_2, according to the magnetic arrangement shown in Figs. 7 and 8. In the referred figures, several stripe-type magnetic bodies M_2 of higher energy density are arranged between several stripe-type magnetic bodies M_1 of lower energy density. The active surface of magnetic body M_1 is larger than that of magnetic body M_2.

The individual gap between the magnetic bodies M_1 and M_2 is preferably up to 50 mm. The magnetic bodies M_1 and M_2, consisting of different magnetic materials, are connected to one another into a circular magnetic arrangement by a rigid or elastic, i.e. flexible, connecting layer Z_1.

In the case of the arrangement of magnetic bodies M_1 and M_2, shown in Fig. 9 as being spatially separated from one another, a ferro-magnetic keeper layer Z_2, of, for example, low-carbon soft iron is provided on the side opposite to the active surface. Further, a rigid or flexible layer of non-

magnetizable material, such as non-magnetic stainless steel, aluminium or a plastic, or of a combination of these components, is arranged on the active surface of magnetic bodies M_1 and M_2 which, basically, ensures the stability of the magnetic arrangement.

For the above-mentioned principle magnetic arrangements it is of no consequence which pole configuration the magnetic bodies M_1 and M_2 have on their active surface. In order to achieve the greatest possible stray effect of the magnetic field in the demonstrated embodiments the magnetic body M_1 is magnetized in axial direction, i.e. vertical to its effective surface.

The embodiments as per Figs. 10 to 14 refer to other circular or rectangular magnetic arrangements whereby, as described above and shown in Figs. 4 to 9, magnetic bodies M_2 of higher energy density build a mechanically connected effective unit with one or more magnetic bodies M_1 of lower energy density. Figs. 12 to 14 show two embodiments which have several magnetic bodies, for example M_2 and M_2' of higher energy density, whereby these magnetic bodies can, reference their geometric sizes and configurations and also in their energy density, be different. By this method the magnetic flux density on the active surface, and the magnetic stray field can be intensified and varied, so that these capacities may be even better adjusted to the individual application case and thereby achieve certain effects.

CLAIMS:

1. Magnetic arrangement for therapeutic application, particularly for the treatment of surface near skin or tissue areas of the human body, with at least one first magnetic body (M_1) and at least one second magnetic body (M_2) being mechanically connected to the first magnetic body (M_1), whereby the magnetic bodies (M_1, M_2) show a high coercive field strength, wherein a maximum magnetic energy product value, $(BH)_{max}$, of the first body (M_1) is lower than that of the second body (M_2) and the bodies (M_1, M_2) have respective active surface regions which form a jointly aligned active surface of the magnetic arrangement, said active surface being the surface area of the magnetic arrangement that is brought into contact with the human body.

2. Magnetic arrangement as per claim 1, wherein both magnetic bodies (M_1, M_2) consist of different magnetic material.

3. Magnetic arrangement as per claim 2, wherein the first magnetic body (M_1) consists of barium or strontium ferrites and the second magnetic body (M_2) consists of a group of the rare earths.

4. Magnetic arrangement as per claims 1 to 3, wherein the $(BH)_{max}$-value of the second magnetic body (M_2) is at least double that of the first magnetic body (M_1).

5. Magnetic arrangement as per claim 4, wherein the $(BH)_{max}$-value of the second body (M_2) is at least fifteen times that of the first magnetic body (M_1).

6. Magnetic arrangement as per claims 1 to 5, wherein the second magnetic body (M_2) is embedded into the active surface of the first magnetic body (M_1).

7. Magnetic arrangement as per one of the claims 1 to 5, wherein the second magnetic body (M_2) is arranged on the active surface of the first magnetic body (M_1) in the form of a flat piece.

8. Magnetic arrangement as per claim 2 or claim 7, wherein the active surface of the second magnetic body (M_2) is smaller than that of the first magnetic body (M_1).

9. Magnetic arrangement as per one of the claims 1 to 8, wherein the vector sum of all magnetic fluxes on the active surface of the total magnetic arrangement is nearly zero.

10. Magnetic arrangement as per claim 6, wherein the second magnetic body (M_2) is form-fit embedded into the first magnetic body.

11. Magnetic arrangement as per claim 6, wherein an airgap is arranged between the first and the second magnetic body (M_1 respectively M_2).

12. Magnetic arrangement as per claim 11, wherein both magnetic bodies (M_1, M_2) are connected to one another on the side opposite to the active surfaces, by a ferro-magnetic retainer layer (Z_2) or a rigid, or flexible, layer (Z_1) of the non-magnetizable material.

13. Magnetic arrangement as per one of claims 1 to 12,

wherein the first magnetic body (M_1) is a rigid permanent magnet of sintered hard ferrite.

14. Magnetic arrangement as per one of claims 1 to 12, wherein the first magnetic body (M_1) is a flexible permanent magnet of plastic bonded hard ferrite.

15. Magnetic arrangement as per one of claims 1 to 14, for therapeutic application in particular, wherein the first magnetic body (M_1) is magnetized with one pole on its active surface, or consists of body segments with magnetized poles of identical polarity, arranged apart from one another, and the second magnetic body (M_2) has several magnetic body segments of identical polarity, but differing to those on the active surface of the first magnetic body (M_1), which are arranged in known geometrical figures and arrangements embedded in the first magnetic body (M_1), or arranged between its poles, or fixed to its surface.

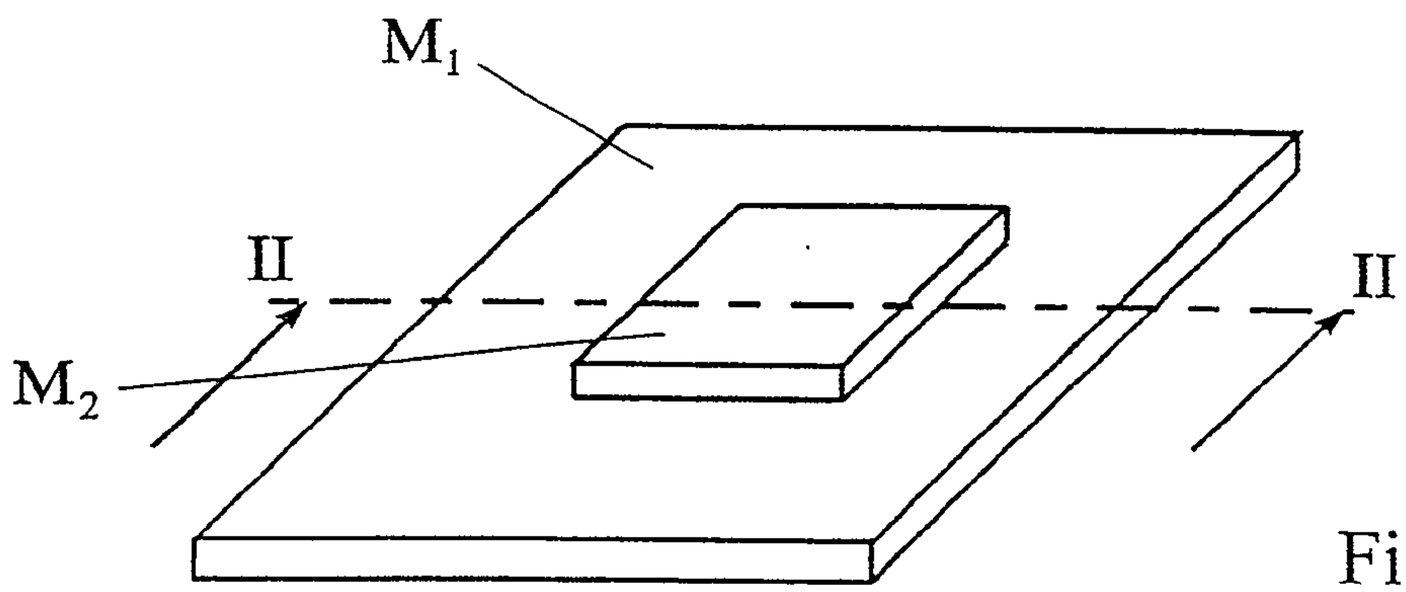

Fig. 1

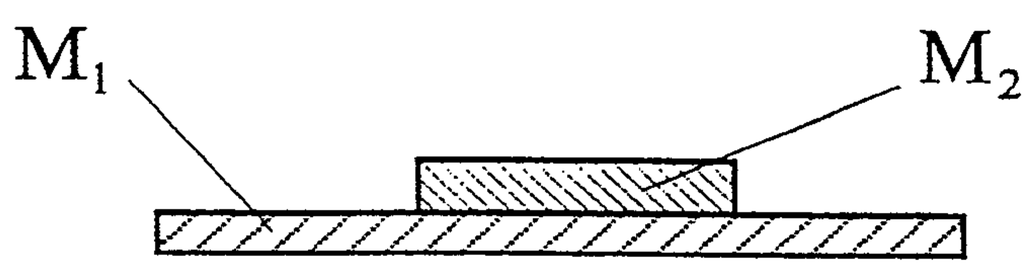

Fig. 2

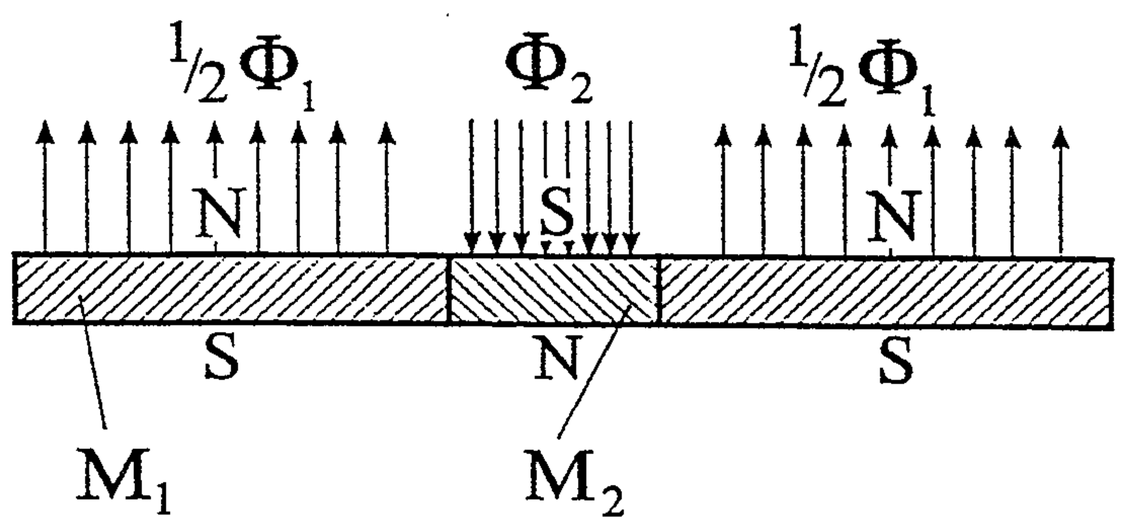

Fig. 3

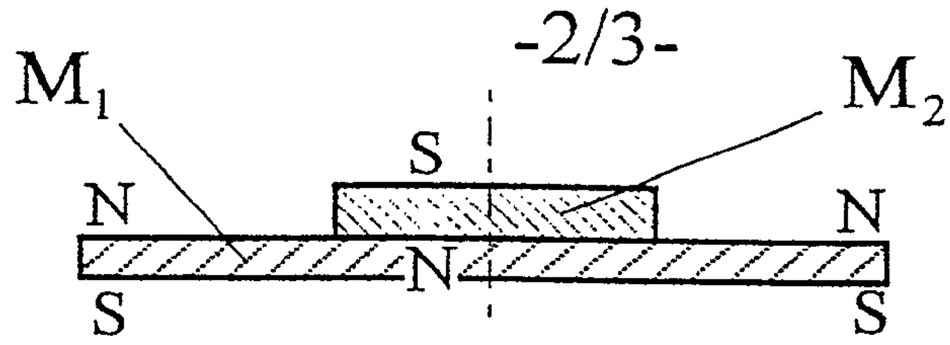

Fig. 4

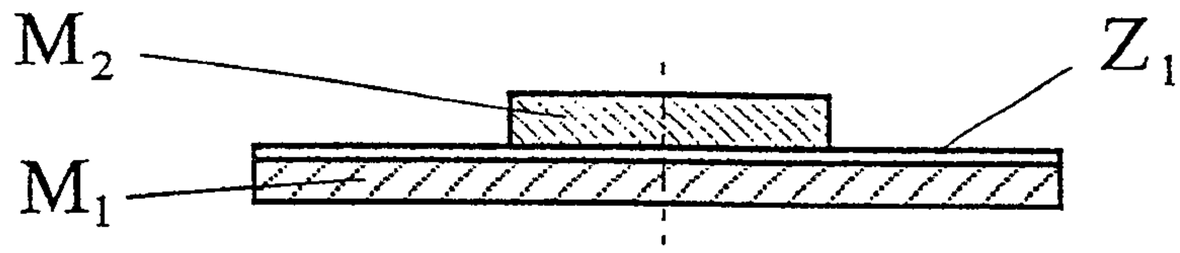

Fig. 5

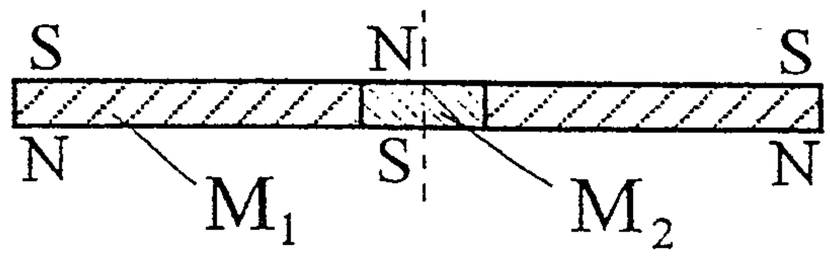

Fig. 6

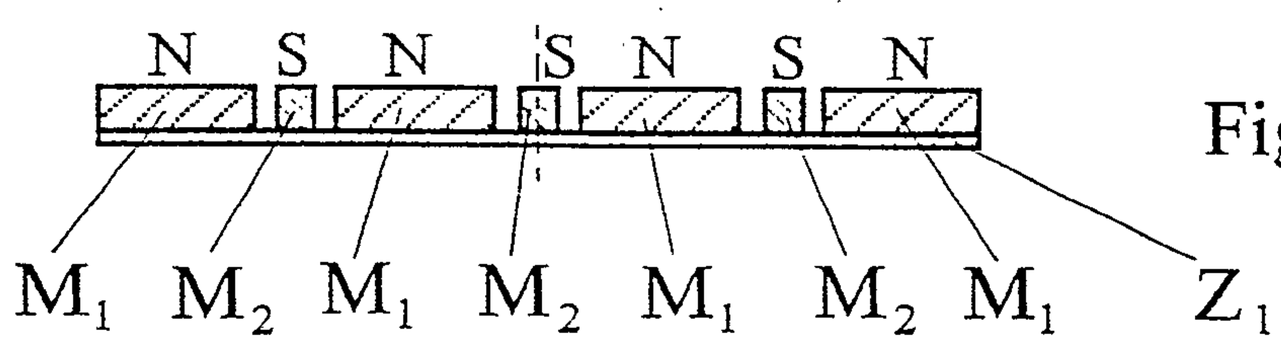

Fig. 7

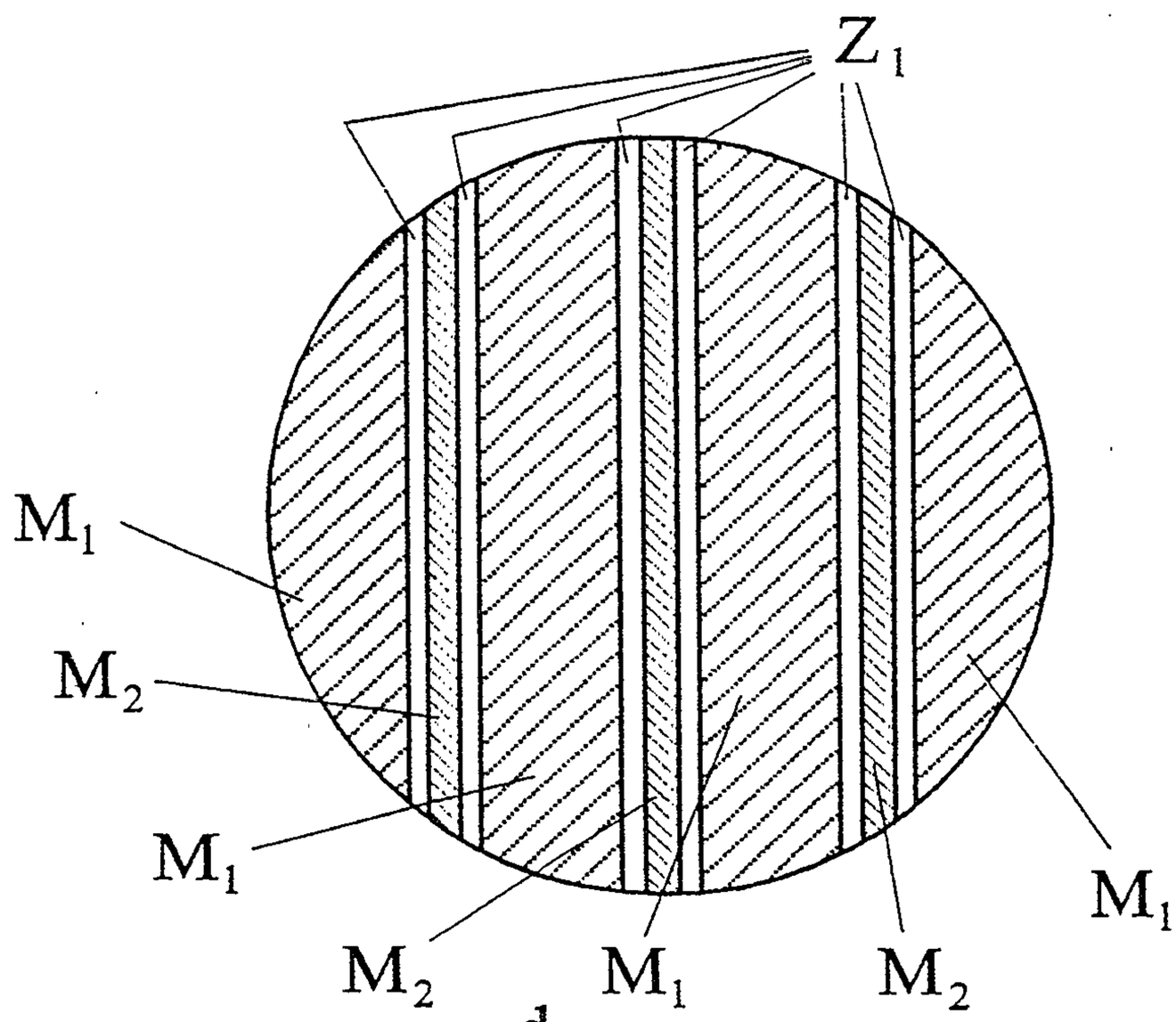

Fig. 8

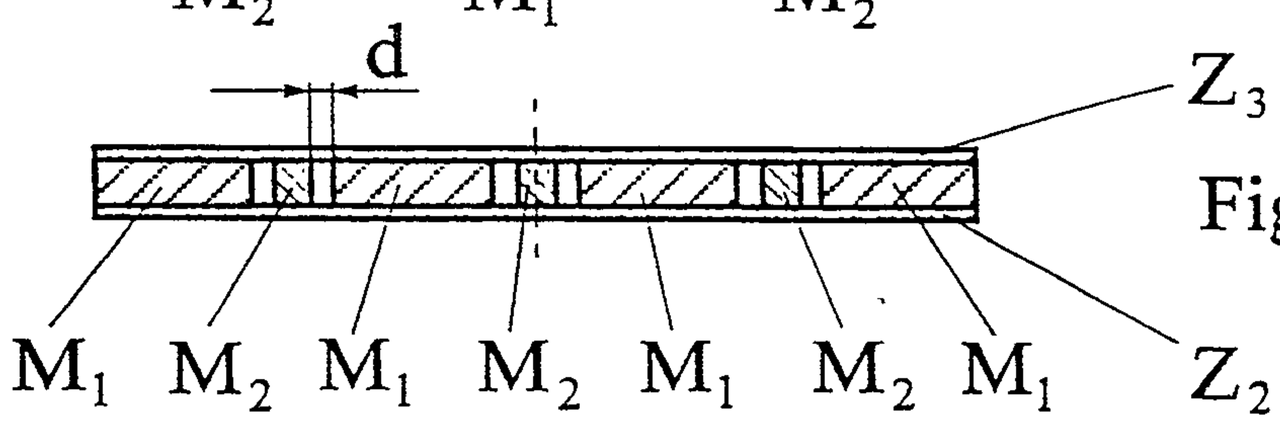

Fig. 9

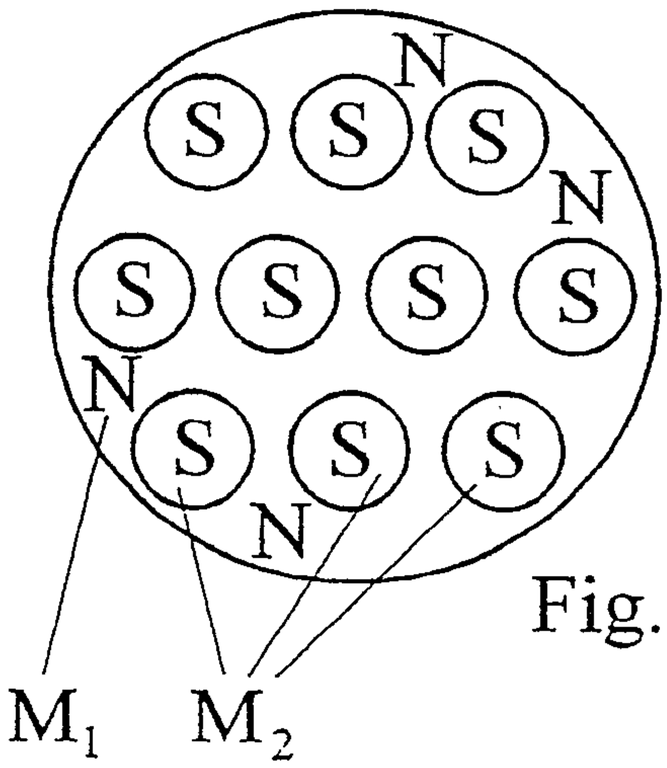

Fig. 10

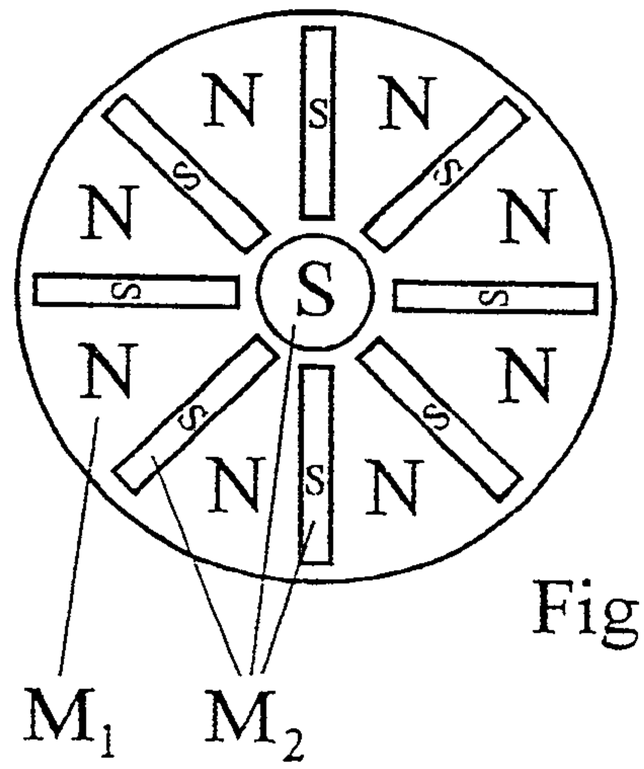

Fig. 11

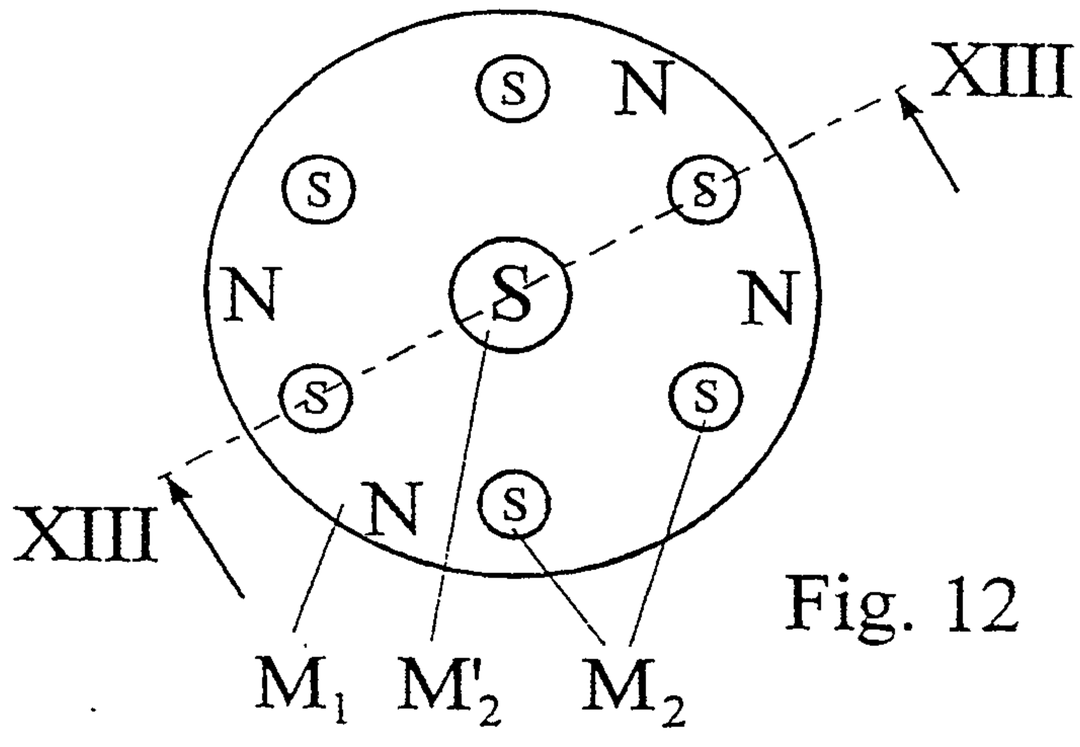

Fig. 12

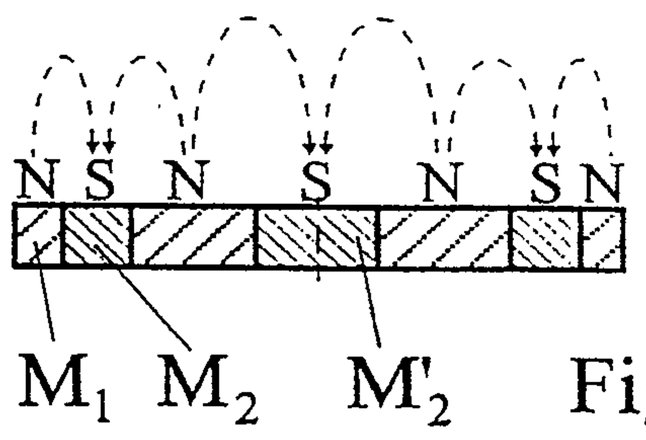

Fig. 13

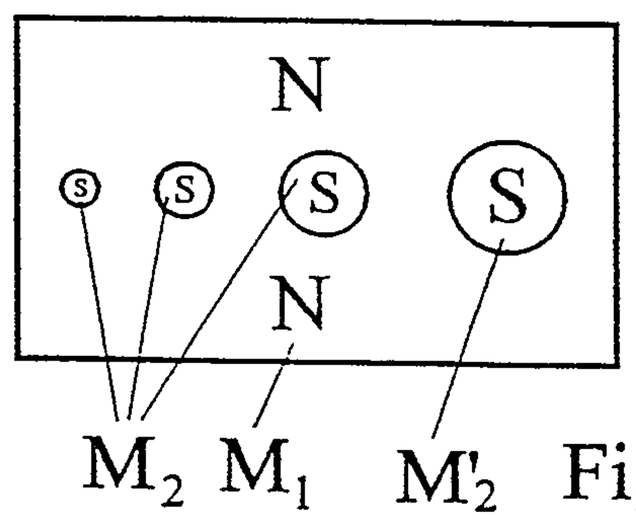

Fig. 14

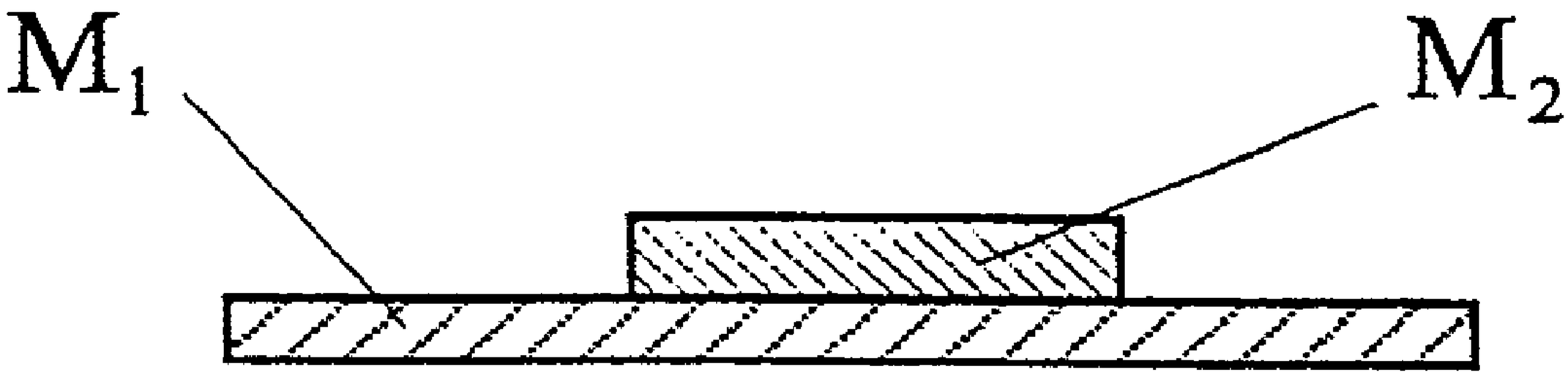
M_1
M_2