Aug. 7, 1945. M. L. BROWNSHIELD 2,381,334

LOOP ANTENNA UNIT

Filed Sept. 6, 1944 2 Sheets-Sheet 1

Fig. 1.

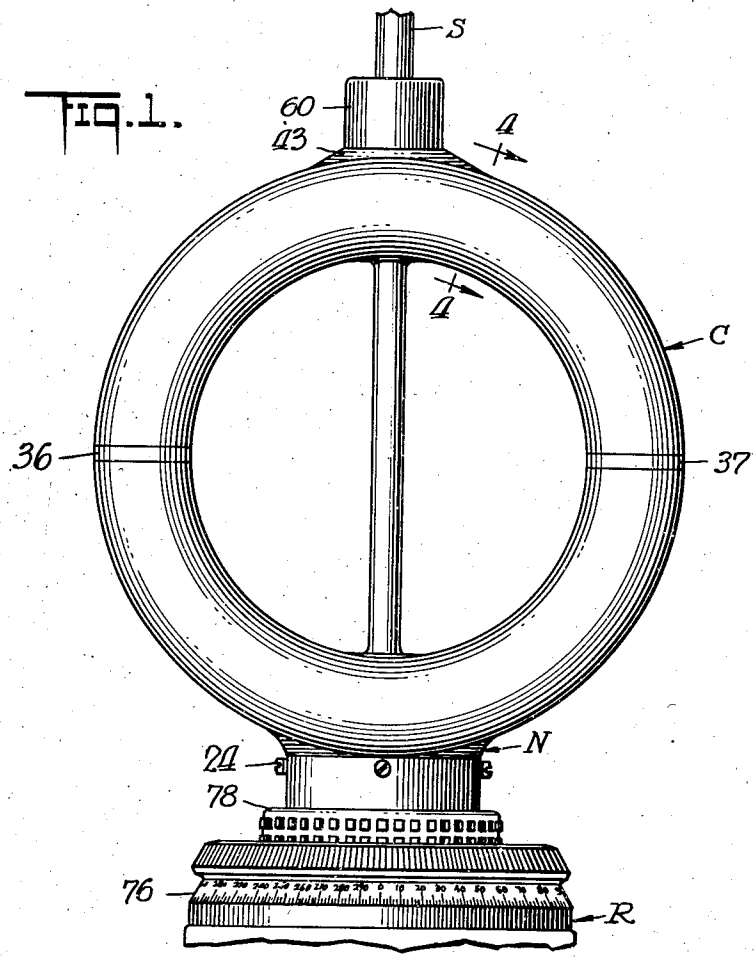

Fig. 3.

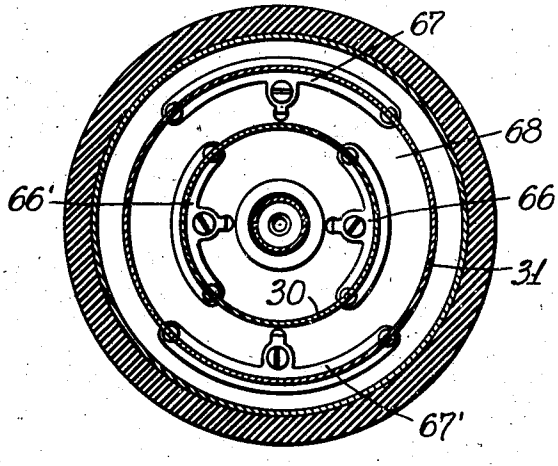

Fig. 4.

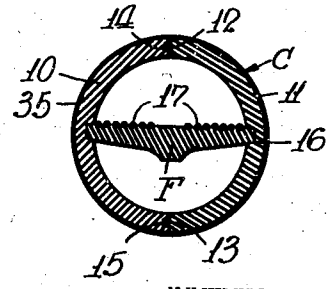

INVENTOR
Milton L. Brownshield
BY
Dean Fairbank & Hirsch
ATTORNEYS

Aug. 7, 1945. M. L. BROWNSHIELD 2,381,334

LOOP ANTENNA UNIT

Filed Sept. 6, 1944 2 Sheets-Sheet 2

Fig. 2.

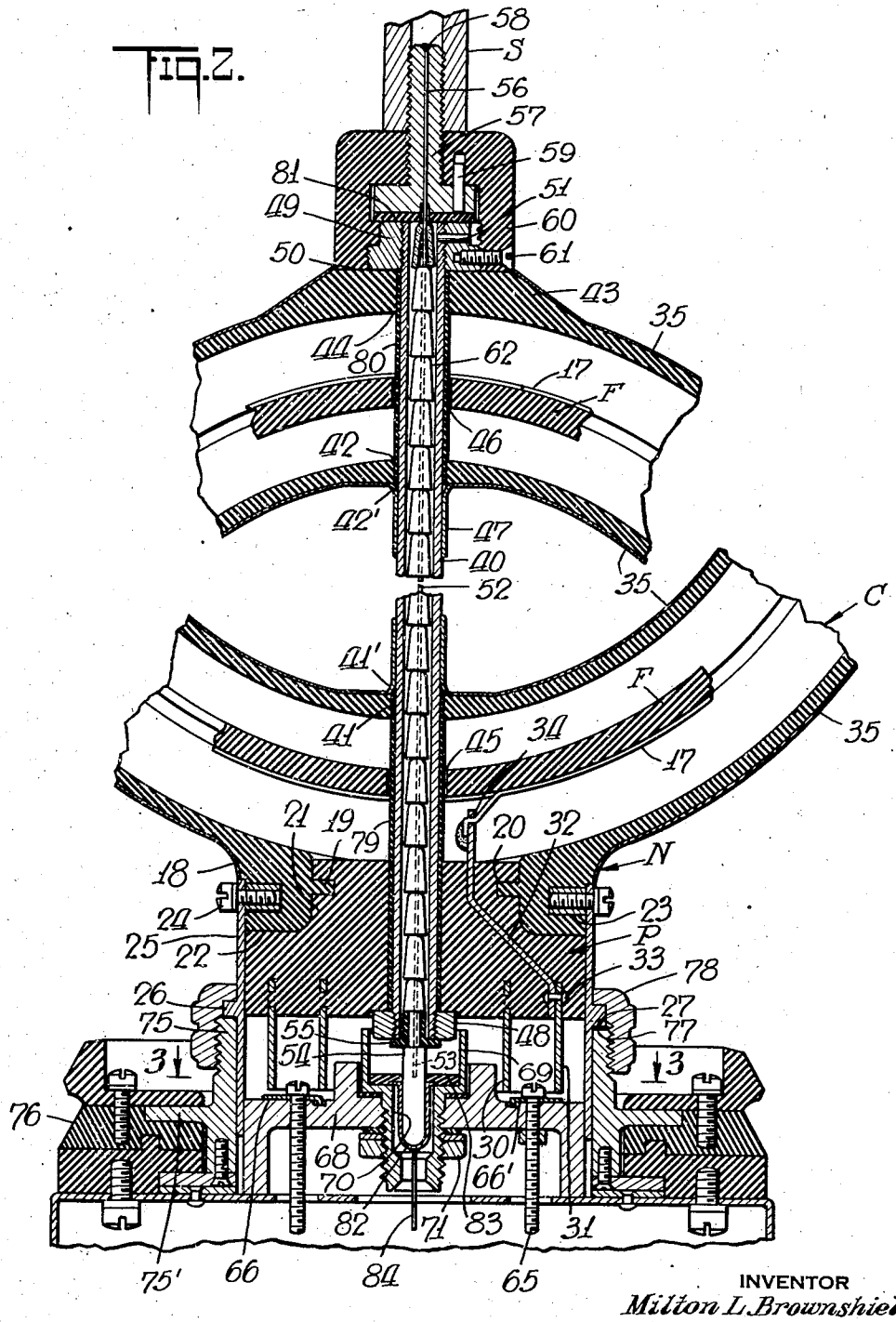

INVENTOR
Milton L. Brownshield
BY
Dean Fairbank & Hirsch
ATTORNEYS

44-157

Patented Aug. 7, 1945

2,381,334

UNITED STATES PATENT OFFICE

2,381,334

LOOP ANTENNA UNIT

Milton L. Brownshield, Dobbs Ferry, N. Y.

Application September 6, 1944, Serial No. 552,829

10 Claims. (Cl. 250—11)

The present invention relates primarily to antenna loop units and the associated structure.

It is among the objects of the invention to provide a simple and rugged construction of the above type, which is thoroughly waterproof, which is easily installed for co-action with the receiver with which it is to be used, and which gives a particularly dependable indication of direction and in a preferred embodiment also an accurately coordinated record of volume.

A feature of the invention is the use of a self-contained loop antenna unit that involves a waterproof, hollow torus shaped casing which has a mounting plug unitary therewith carrying contacts connected to the terminals of the antenna coil that encircles a loop carrying frame rigidly affixed within the casing. Preferably, the torus casing has a tube extending diametrically therethrough for mounting a conductor therein, to the upper end of which is to be attached to the sense or whip antenna to be connected to the receiver by way of a central contact in the plug. Preferably the lengths of the tube within the torus casing are enclosed in a plastic sleeve bonded to said casing at the various holes in the latter through which the tube extends, thereby to render the structure waterproof.

In the accompanying drawings in which is shown one of various possible embodiments of the several features of the invention,

Fig. 1 is a side elevation of the loop antenna unit shown in place on the top of a receiver carrying the same,

Fig. 2 is a view in longitudinal cross-section of the assembly shown in Fig. 1 and on a greatly enlarged scale, with parts broken away,

Fig. 3 is a transverse sectional view taken on line 3—3 of Fig. 2; and

Fig. 4 is a transverse sectional view taken on the line 4—4 of Fig. 1.

Referring now to the drawings, the antenna unit of the invention comprises a torus casing C, desirably of polystyrene, for enclosing the direction finding antenna loop. Preferably, the casing C is made up of two annular troughs 10 and 11, which are interkeyed by providing peripheral ribs 12 and 13 on the inner and outer edges of one, fitting into corresponding annular grooves 14 and 15 respectively in the edges of the other. The annular troughs have annular grooves 16 midway between the abutting pairs of edges for accommodating the lateral edges of a generally cylindrical loop coil frame F, which thus extends across the torus casing, substantially midway between its outer and inner peripheries and serves incidentally as a buttress therefor. About the cylindrical surface of the loop coil frame F is coiled the helical antenna loop 17.

The torus casing also has a lateral mounting neck N comprising short radiating neck extensions 18 unitary therewith. Each neck extension has a unitary interior ledge, said ledges in the assembled structure forming an annular rib 19 which is lodged in a peripheral groove 20 about the correspondingly reduced end 21 of a plug P which is embraced by the neck N. The rim of the neck abuts the shoulders 22 on the plug, the lower part of which is of the same diameter as and flush with neck N. Preferably the neck N of the torus casing has affixed therein radial threaded metal bushings 23 for accommodating screws 24 to affix to the torus casing a metal mounting shell 25. The shell 25 has a peripheral shoulder 26 with a positioning lug 27. The torus casing is of plastic, preferably of polystyrene and its elements are welded or bonded together by means of polystyrene cement so as to afford a thoroughly waterproof construction. The loop coil frame F and the plug P may be similarly cemented in place in the torus casing.

The plug P mounts the contacts for the antenna loop, said contacts being a pair of cylinders 30 and 31 coaxial with the plug. Each cylindrical contact has a connector strip 32 riveted thereto as at 33 and embedded in the plug, to the inner upwardly protruding end of which is connected at 34 the corresponding extremity of the antenna loop 17.

The torus casing is metal plated, desirably silver plated at 35, for grounding connection and said plating is interrupted as at 36 and 37 for access of the radio impulses to the antenna coil 17 within the casing.

In a preferred embodiment, the position finding coil antenna which is of course to be connected to a tuning eye circuit (not shown) in the receiving unit R, has associated therewith a sense antenna which is to be connected to a conventional radio receiver (not shown) which is part of the unit R. The sense antenna is arranged to be mounted immediately above as an extension of the vertical diameter of the torus casing, as indicated at S. In a preferred construction best shown in Fig. 2, a metal tube 40 extends through the thickness of the plug P diametrially through the hollow torus casing C—i. e. through the lower part of the inner wall thereof at hole 41,

the upper part of said inner wall at hole 42 and the thickened upper end 43 of the outer wall at hole 44. The loop coil frame F is also perforated at 45 and 46 to afford passage for tube 40, the coil 17 being wound as shown in Fig. 4 to straddle said tube. Encompassing the mid-section of tube 40 is a metal tube 47, which is swaged at its ends to engage the torus casing. In this embodiment, the metal plate 35 is applied after assembly of the diametral member, so that the plating extends over metal tube 47 as well as its swaged ends. Sealing tubes 79 and 80 of polystyrene respectively enclose the lower and upper parts of metal tube 40 and are secured in place at said openings 41, 42 and 44 by means of polystyrene cement, so as to afford thoroughly secured water-tight closure for the apertures in the casing C. The metal tube 40 is secured in position by a nut 48 threaded about the lower end thereof and abutting against the plug P. The upper end of the metal tube has threaded thereon the nut 49 which abuts the flat surface 50 on the torus casing. That nut is securely affixed by means of a radial pin 51. A connecting wire 52 soldered at its lower end 53 to a terminal prong 54 retained in an insulating bushing 55 in the lower end of tube 40, extends axially through the length of said tube, and at its upper end through the axial aperture 56 of a mounting nipple 57 resting upon insulating washer 81 and to the upper end of which said wire is soldered at 58. A pin 59 rising from the head of nipple 57 extends into a connector cap 60 threaded upon the nut 49 and keeping the parts in assembled relation. A locking screw 61 radially through said cap extends into nut 49 and affixes the cap against rotation. The nipple 57 as above indicated, serves as the mount for the removable sense or whip antenna S. A series of frusto-conical insulators 62 encompass wire 52 and thereby effectively insulate it from the inner wall of the metal tube 40. The parts thus far described constitute the loop antenna unit as an article of manufacture.

It will be understood that a set of the loop antenna units described would be available, each with a loop antenna of characteristic number of turns for use each for a particular band of wave lengths. The loop antenna units are identical in size and shape and may be distinguished by numeral, letter or color mark.

The receiver unit R as above suggested, may be conventional, and encloses the tuning eye and its circuit (not shown) as well as the radio receiver (not shown). The tuning eye circuit is connected by screws 65 to spring terminals 66 and 67, each extending in arcuate relation upon an insulating platform 68 on the instrument. The arcuate terminals are bowed for resilient contact respectively with the inner contact ring 30 and the outer contact ring 31. In order to keep the spring pressure balanced, the terminal 66 is preferably paired by diametrically opposite terminal 66' and terminal 67 by a diametrically opposed terminal 67'. The nut 48 and terminal prong 54 of the whip antenna extend into the socket end 69 of a central grounding terminal cup 70 affixed by nut 71 to the platform 68 for connection to the receiving set. To this end, the prong 54 extends into a corresponding metal shell 82 affixed at its rim to the lower face of an insulating washer 83 resting in cap 70, wire 84 soldered to shell 82 effecting connection to the radio receiver (not shown).

The mounting shell 25 of the loop antenna unit, fits slidably into a collar 75 that rests at flange 75' upon azimuth ring 76. Upon the rim of collar 75 rests the rib 26, the lug 27 of which is keyed into a corresponding notch 77 in said rim, for correct location with respect to the scale. A cap nut 78 screwed upon the threaded exterior of collar 75 maintains the parts assembled.

The utility of the unit for locating a broadcasting station is obvious. The torus casing together with the azimuth ring 76 is turned until the tuning eye indicates the direction of the sending station, whereupon the sense or whip antenna S if used, will give the volume of the impulse. Since the whip or sense antenna is coaxial with the axis of adjustment of the loop antenna, the errors incurred where the two antenna are spaced laterally by as little as a foot are manifestly obviated. Accordingly the unit is of particular utility for rapidly locating a transmitter.

Manifestly the loop antenna unit could be used in association with any receiving unit.

The antenna unit is especially easy to apply. It is strong, rugged and waterproof, so that it is not subject to the disturbances of short-circuit due to the admission of water. It could be jettisoned and submerged in the ocean and recovered intact.

As many changes could be made in the above apparatus, and many apparently widely different embodiments of this invention could be made without departing from the scope of the claims, it is intended that all matter contained in the above description or shown in the accompanying drawings shall be interpreted as illustrative and not in a limiting sense.

Having thus described my invention, what I claim as new and desire to secure by Letters Patent of the United States is:

1. A loop antenna unit, comprising a pair of complementary annular insulating troughs, each with a short radial neck trough extension, a generally cylindrical loop support frame, an antenna loop thereabout, a contact carrying plug, and means bonding the annular troughs in edge to edge contact into a unitary water-tight torus casing that has a neck extension, with the loop support frame and the plug rigidly clamped respectively in the torus casing and in the neck extension thereof.

2. The combination recited in claim 1 in which the contacts in the plug are coaxial cylinders exposed at the lower end of the plug, each having a connector protruding from the upper end of the plug to which the ends of the antenna loop are connected.

3. A loop antenna unit, comprising a pair of complementary annular insulating troughs, each with a short radial neck trough extension, said troughs being adapted to register in edge to edge relation to form a torus casing with a lateral neck extension, a cylindrical loop support frame, an antenna loop thereabout, said frame extending transversely across said registering edges and having lateral edges keyed in corresponding grooves in the troughs, a terminal plug encompassed by said neck and peripherally keyed therein, means bonding the troughs into a unitary water-tight torus casing, with the loop coil frame and the plug rigidly retained in place, said plug having a pair of exposed terminal rings concentric therewith, and terminals through said plug from the respective rings to the antenna loop.

4. The combination recited in claim 3 in which the torus casing is metal plated at its exterior with narrow gaps in the plating.

5. A loop antenna unit comprising an insulating torus casing having a mounting plug, a generally cylindrical loop coil frame enclosed in said casing with an antenna loop thereabout, current leads from said coil extending into said plug, coaxial contact rings carried by said plug and connected to said leads, said torus casing having a tube extending across the entire outer diameter thereof, a wire through said tube insulated therefrom, having a mount at its upper end for a sense antenna and having a terminal at its lower end, the torus casing and the associated tube for the sense antenna forming an integral water-tight structure.

6. A loop antenna unit, comprising a mounting plug having a pair of coaxial cylindrical contacts and a central contact, all exposed at the lower end thereof, an upright insulating torus casing unitary with said plug having a cylindrical insulating loop mounting frame therein with an antenna loop coiled thereabout, the latter being connected at its ends to the cylindrical contacts, an upright insulating tube extending through said plug and diametrally through said torus casing and bonded with respect to the latter in a water-tight structure, a wire connected to said central terminal and extending axially through said tube, a metal tube lining said insulating tube and about said wire, insulators encompassing said wire and shielding the same from said metal tube and a mount at the upper part of said torus casing for affixing a sense antenna to the upper end of said wire.

7. A loop antenna unit, comprising an insulating plug, a pair of coaxial cylindrical contacts affixed therein and protruding from the lower end thereof, connectors within said plug joined to said annular contacts and protruding from the upper end of said plug, a torus casing of plastic, keyed with respect to said plug, a generally cylindrical loop support frame affixed in the interior of said torus casing, substantially midway between the inner and outer diameter thereof, an antenna coil about said frame having its ends joined to said connectors, a metal tube extending through the height of said plug and diametrally of said torus casing through the upper end thereof, plastic tube lengths about said metal tube and within said torus casing and contacting and bonded to the corresponding walls of the torus casing and forming a water-tight seal with respect thereto, a wire axially through said metal tube affixed at the lower end thereof, insulators about said wire spacing the same from the metal tube, a sense antenna mount affixed upon the upper part of said torus casing and aligned with said tube, said axial wire being affixed to said mount.

8. The combination recited in claim 7 in which the plug is reduced in diameter at its upper end, the torus casing is made of two coacting annular troughs, each having a short radial neck trough keyed to the corresponding part of the plug and an external conformation flush with the cylindrical surface of the plug below the reduced portion and each having a metal bushing radially embedded therein for purposes of affixing the same.

9. A loop antenna unit, comprising an insulating torus casing having a direction finder coil encased therein, said casing having a terminal carrying appurtenance unitary therewith, a metal tube extending diametrally through said torus casing, insulating tube lengths thereabout within the torus casing and bonded thereto in water-tight relation, a wire extending axially through said metal tube, means insulating said wire from said tube, a nut affixing said tube at the lower end thereof to serve for grounding connection, a prong affixed to said wire at its lower end and insulated from said nut for connection to a receiver, and sense antenna mounting means at the outer end of said wire.

10. A loop antenna unit, comprising an insulating torus casing for a direction finder coil encased therein, said casing having a terminal carrying mounting appurtenance unitary therewith, said appurtenance including ring terminals for the direction finder coil, and including a central prong and an encompassing nut insulated from said prong serving as sense antenna terminals, a metal tube extending diametrally through said torus casing and mounting said nut at its inner end and having sense antenna mounting means at the other end thereof, a connecting wire through the length of said tube connected to said terminal prong at one end and to said sense antenna mounting means at the other end, insulating tubes encompassing those parts of the metal tube within the torus casing and bonded to said casing for water-tight connection, a metal tube encompassing the median exposed length of metal tube and swaged at its ends against the wall of the torus casing and a metal coating plated upon said torus casing and said outer metal shell, said coating having limited areas of interruption for access of radio impulse to the finder coil.

MILTON L. BROWNSHIELD.