(No Model.)

3 Sheets—Sheet 1.

F. G. DIETERICH.

VENDING MACHINE.

No. 519,448. Patented May 8, 1894.

Fig. 1.

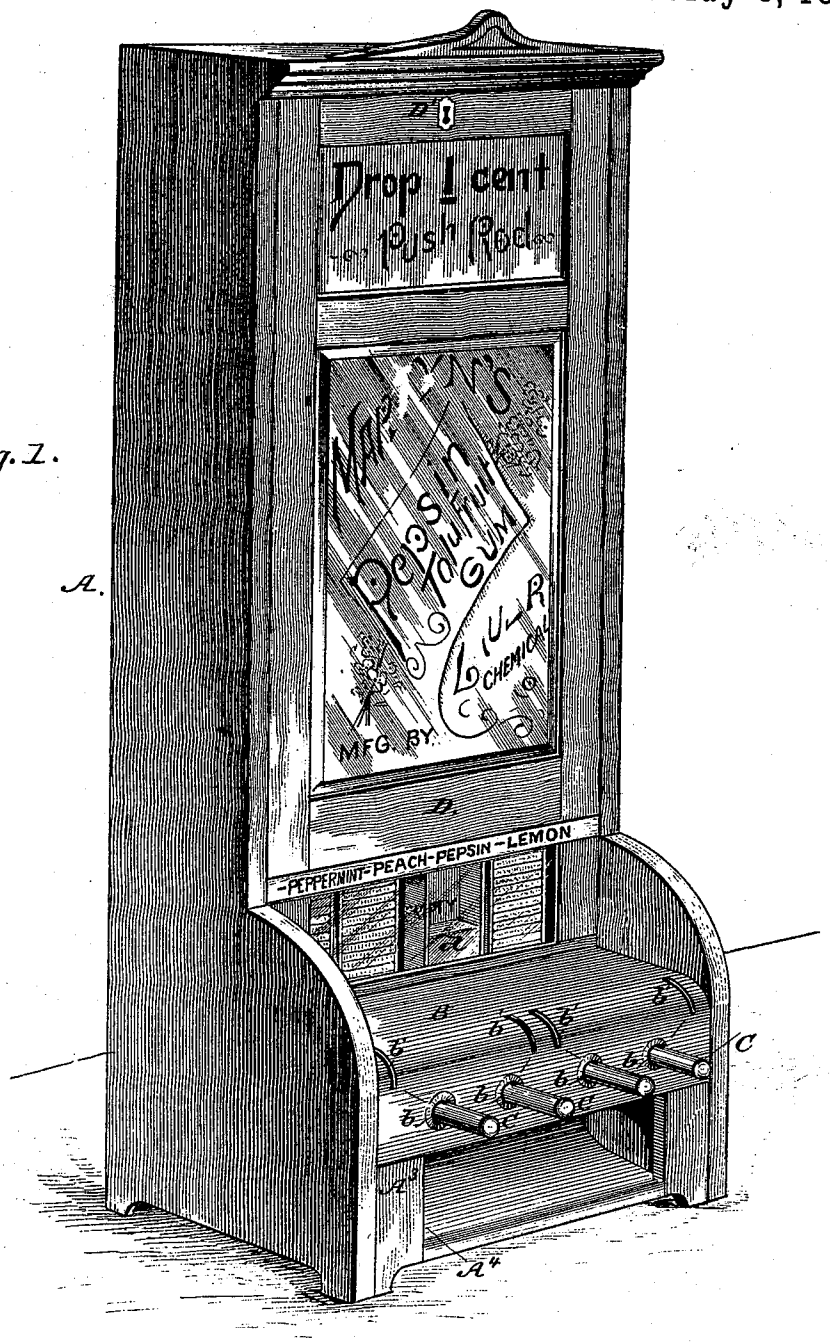

WITNESSES:

Jos. A. Ryan

H. D. Blondel

INVENTOR

Fred G. Dieterich

THE NATIONAL LITHOGRAPHING COMPANY,
WASHINGTON, D. C.

(No Model.) 3 Sheets—Sheet 2.

F. G. DIETERICH.

VENDING MACHINE.

No. 519,448. Patented May 8, 1894.

Fig. 2.

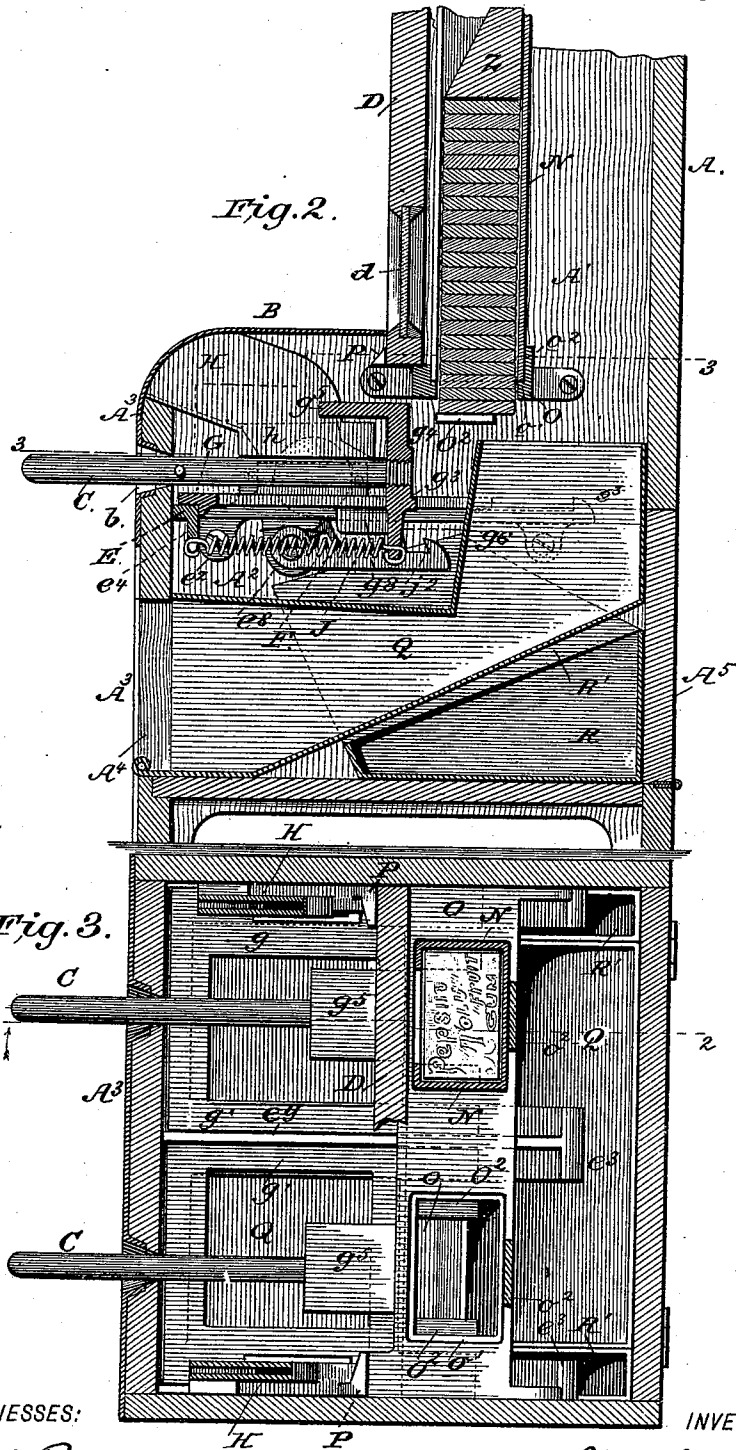

Fig. 3.

WITNESSES:

Jos. A. Ryan

W. D. Blondel

INVENTOR

Fred G. Dieterich

THE NATIONAL LITHOGRAPHING COMPANY,
WASHINGTON, D. C.

(No Model.) 3 Sheets—Sheet 3.

F. G. DIETERICH.

VENDING MACHINE.

No. 519,448. Patented May 8, 1894.

Fig. 4.

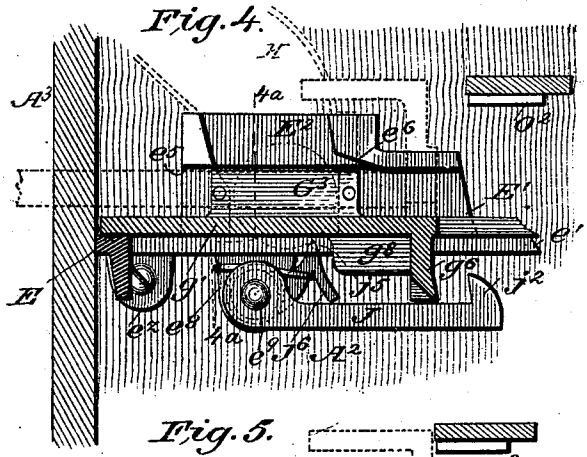

Fig. 4a

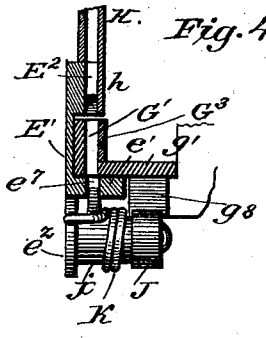

Fig. 5.

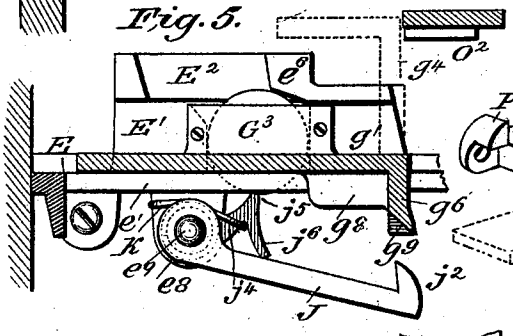

Fig. 7.

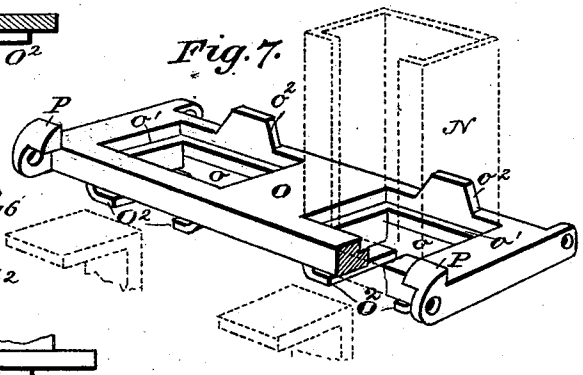

Fig. 6.

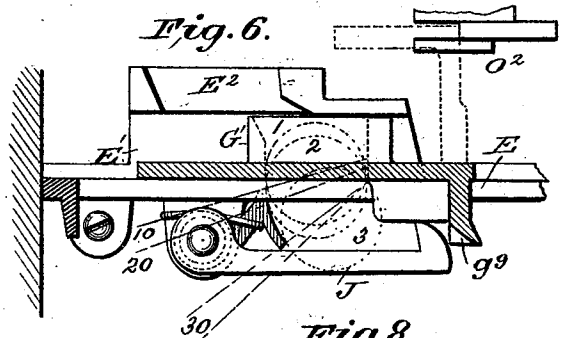

Fig. 9.

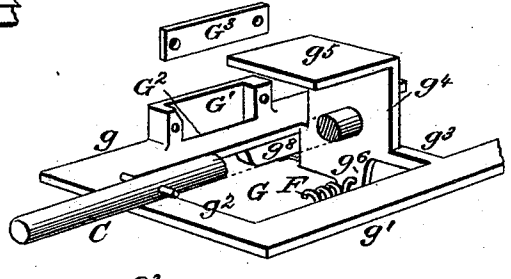

Fig. 8.

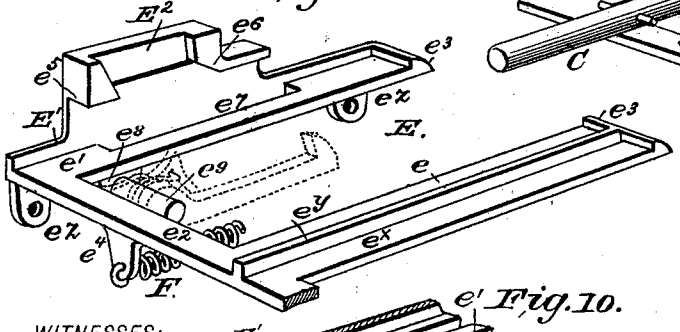

Fig. 10.

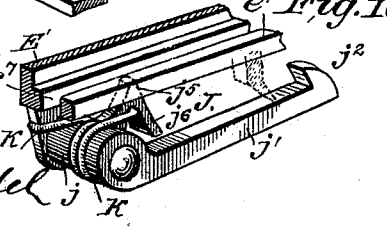

WITNESSES:

Jos. A. Ryan

W. D. Blondel

INVENTOR

Fred G. Dieterich

THE NATIONAL LITHOGRAPHING COMPANY,
WASHINGTON, D. C.

UNITED STATES PATENT OFFICE.

FRED G. DIETERICH, OF WASHINGTON, DISTRICT OF COLUMBIA, ASSIGNOR TO THE LAUER CHEMICAL COMPANY, OF BALTIMORE, MARYLAND.

VENDING-MACHINE.

SPECIFICATION forming part of Letters Patent No. 519,448, dated May 8, 1894.

Application filed February 14, 1894. Serial No. 500,143. (No model.)

To all whom it may concern:

Be it known that I, FRED G. DIETERICH, residing at Washington, in the District of Columbia, have invented a new and Improved Vending-Machine, of which the following is a specification.

My invention relates more particularly to that class of vending or coin operated machines, which are especially adapted for selling chewing gum, small chocolate packages and the like, and it primarily has for its object to provide a machine of this kind of a very simple and inexpensive construction and positive in its operation.

It has also for its object to provide a machine of this kind in which the coin operated and delivery mechanism is composed of very few parts, all of solid metal, which parts are so constructed and arranged, that they can be cast almost complete, so as not to require any skilled labor in the finishing or fitting thereof.

Furthermore it has for its object to dispense with the usual specially constructed hold back devices, for preventing a return movement of the plunger or slide rod, after it has been partially pushed or pulled to operate the machine, after the proper coin is inserted.

A still further object is to provide a rest or seat plate of a simple but durable construction, which will serve as the bottom support for the package chute, and which is also constructed to act as a lock to hold the lower end of the front of the casing in position.

With other minor objects in view, which hereinafter will be pointed out in detail, my invention consists in the novel arrangement and peculiar combination of parts hereinafter first described in the specification, and then specifically pointed out in the appended claims, reference being had to the accompanying drawings, in which—

Figure 1 is a perspective view of my improved vending machine, showing the same arranged as a four compartment machine. Fig. 2 is a vertical section of the same taken approximately on the line 2—2 of Fig. 3. Fig. 3 is a horizontal section of my machine, arranged as a two compartment machine, the section being taken practically on line 3—3, Fig. 2. Fig. 4 is a detail sectional elevation of the coin operated tripper, the slide bar frame, the main supporting bracket, the abutment and coin pockets in their normal position; the ejector or plunger being shown in dotted lines. Fig. 4^a is a detail cross section taken on the line 4^a 4^a, Fig. 4. Fig. 5, is a view, showing the slide bar frame partially pushed in, the tripper depressed to an unlocked position and the ejector or plunger about to engage the lowest package of gum. Fig. 6 is a similar view of the said parts, illustrating the slide bar to a further inward position, and the tripper returned to its normal position to act as a hold-back, the dotted lines illustrating how the coin in connection with its carrying pocket, and the tripper, form the lock mechanism for holding the slide bar from a rearward movement, when pushed to such point shown. Fig. 7 is a detail perspective view of the gum package holder or rest plate hereinafter referred to. Fig. 8 is a perspective view of the main casting or supporting frame, and its integral coin receiver and abutment. Fig. 9 is a perspective view of one of the slide frames with the integral plunger or ejector and coin pocket, and the slide rod, and Fig. 10 is a perspective view of the lock or tripper pawl.

In its preferred construction my improved vending machine is formed with four distinct compartments, holders, and coin operated mechanism, in some instances, however, they are formed with but two compartments, as most clearly shown in Figs. 2 and 3, it being obvious, that in its very cheapest form it has but one compartment and coin operated means.

In the following description, I shall refer generally to the construction shown in Figs. 2 and 3, as the number of compartments are in all cases but duplications of what is there shown. The case or box A, is of substantially the form shown in Fig. 1, and in practice is formed of hard wood, such box comprising an upper or package holding portion A′ and a lower mechanism holding compartment, A^2, terminating at the bottom in a delivery portion A^3, such compartment A^2 extending horizontally forward to form a front extension, the top B of which is preferably, for ornamentation, of nickle plated

tin or polished sheet brass, which extends from the bottom of the compartment A′ over the front of the portion A^3 to the delivery opening A^4, it having apertures b, b, to receive the pusher rods C, C, and coin slots b' at their front edge as shown. The front of compartment A^2 is held closed by a removable member or door D, the lower end of which is formed with a glazed sight opening d, whereby the lower portions of the holders can always be in view, and the condition of the contents thereof, at all times, be ascertained, such holders having on them the usual "empty" sign which comes in view after the weight or follower passes below it. The front member D, has an ordinary lock connection D′ with the top of the case, while its lower end is held, locked in place, by a simple and novel means presently referred to, and such front in practice has the usual "instruction" panel at its upper end, while the face proper forms an advertising panel as most clearly shown in Fig. 1.

Referring now more particularly to Figs. 2, 3 and 8, it will be noticed, the main supporting frame consists of a cast plate E, formed of longitudinal side members e, e' having ears e^z, whereby they can be secured to the sides of the casing or box, a front transverse connecting member e^2, and when the machine is a double one, it has a central longitudinal member e^x, having a central rib e^y; the ends of such members e and e^x having stop portions e^3, e^3, and the front member e^2 a central apertured lug or lugs e^4, to which one end of the retractile spring (or springs) F is secured. It will be noticed that the casting E has its outer member e' formed with a vertical extension E′, which with the rib e^y, forms guides, between which the slide bar or frame G is held to slide, and such extension E′ has an integral coin receiving channel E^2, the bottom of which terminates in an overhanging portion e^5, the inner end of which forms an abutment member e^6, such channelway and abutment projecting over a longitudinal slot or coin passage e^7 in the member e', as shown, and such casting E has a pendent ear e^8, at a point under the front end of the channel E^2, from which projects inwardly a stud or pintle member e^9, which forms the pivot member for the tripper or lock pawl presently referred to. So far as described it will be seen that the base or supporting frame which is fixedly held in the box, has the coin channel, the abutment, and the tripper pivot, integrally formed therewith, this not only simplifying the construction but providing a novel means whereby three most important parts can be formed at one time with a fixed relation to each other, thereby greatly reducing the cost of manufacture and need of skilled labor. The channel way E^2 it will be noticed in Fig. 2 is connected with the coin slot by a sheet metal chute H, which extends from the coin slot and communicates with the channel-way and has an extension h which fits over the open front of such channel. The slide frame G, the construction of which is most clearly shown in Fig. 9, has side members g, g', a front cross bar g^2, a rear cross member g^3 formed with a central upright or push portion g^4, the upper end of which has a rearwardly extending member g^5, which forms a cut off, as will presently appear, such cross member having also a central pendent ear g^6 to which the inner end of the retractile spring F is secured, as most clearly shown in Fig. 2. It will be noticed by reference to Fig. 3, the end member g, which slides on the end member e' of the supporting casting, is somewhat wider than such member e', to form a projecting portion, on the under face of which and projected rearward from the cross bar g^2 is a lug portion g^8, the lower face of which however does not extend down to the bottom of the cross bar, but terminates at a rearwardly inclined notch g^9, see Fig. 4. The casting G, has integrally formed therewith a vertical coin pocket G′, the bottom of which is open as at G^2, and when the several parts are in position, registers with the slot or coin passage e^7 in casting E, the front of such pocket being held closed by a plate G^3. When the several parts are in their normal position, as shown in Fig. 4, the coin pocket G′, is directly under the overhanging portion of the channel E^2 and forms a continuance of such channel, its rear portion being just in advance of the coin abutment. By this arrangement it will be noticed that the coin receiving pocket is directly connected to and integrally formed with the slide bar and moves with same back and forth. A further object in arranging the several coin receiving parts as described, is to form an upper guide whereby the slide member G is held from jumping upward, and to run true as it is pulled back by the spring F

The tripper or lock pawl J, the novel and peculiar construction of which forms one of the essential features of this invention, consists of a hub portion j, (which fits on the pintle e^9,) formed at its outer end with a rearwardly extending member j', having an upwardly extending lock finger j^2. At its inner end the hub j has an integral short crank like member j^4, projected in a similar direction as the lock member, which curves upward, and projects at j^5 into the coin passage e^7, at a point approximately under the front of the coin abutment, such projection j^5 forming the rest or lower bearing for the lower edge of the coin. The hook end of the lever, it will be seen in Figs. 2 and 4, projects a short distance beyond the inclined notched portion of the cross bar g^2, to allow for a clearance of such lever from such bar, when acted on by the coin, leaving as it were, the slide casting G held for a free limited movement when in a locked position, and to overcome any action on the gum packages when the slide casting is freely moved to such limited extent, the plunger and cut off is set back from the front edge of the gum cake, a distance equal to such

movement, as shown. The free end of the crank member j^4, has a pendent inwardly curved portion j^6, and such crank portion and the lock member are held up to their normal positions by the torsional spring K arranged as shown in Fig. 2; the free end of the lock lever resting up against the cross bar g^2. The crank portion j^4, it will be noticed, normally has its upper end in a plane above the pivotal axis of the tripper, the object of which is, to cause such portion so soon as the first half of the coin passes beyond it, to form a back stop and a lock bearing, in case the pressure on the push rod C, (which is connected to the plunger as shown) should be momentarily released. This operation is best explained as follows, reference being had to Fig. 6. Supposing the slide or pusher has been pushed in to the position shown in such figure, the gum cake will still be held from falling. Should at this time the coin be either in the positions indicated by circles 1, 2 and 3, the down pressure on the crank will be released, and as the cross bar at this time is beyond the end of the lock portion, the spring K will force the tripper back with its nose or lock end, against the lug g^8. Now should pressure be released on rod C the spring F would pull the slide G back, but as the coin is still in the pocket G′, the lower rear edge would press the coin against the rear edge of the portion g^6, and the pressure being in the lines indicated by 10 and 20, above the axis of the tripper, it follows, that the said tripper will be forced the more tightly to its normal position, and the coin form a wedge or lock member to hold the slide from back movement. After the slide G has been sufficiently moved inward to discharge the gum, and should the pressure at the moment of the discharge of the gum be released, the back pressure on the coin (which at such time would be about at the point indicated by dotted circle 3), would be in the direction indicated by lines 30, below the axis of the tripper, and in consequence such pressure would move the tripper to its open position, and cause the coin to positively discharge before the slide G could assume its normal position. It should be stated however that in practice the inward travel of the plunger extends slightly beyond the discharge point of the gum holder.

The gum holders comprise vertical chutes N, N, in some form of sheet metal, preferably tin, of the conventional form. To provide a simple means for placing and holding them in position, I provide the cast plate O, shown most clearly in Fig. 7, which plate has openings formed with off-sets o', o', in which the lower ends of the chutes are held and which rest on the off-sets, as shown, and to facilitate their insertion into such openings, and to form additional braces therefor, the plate O has vertical lugs o^2 o^2 at the rear of such openings, as shown.

Referring now to Fig. 2, it will be seen, the openings o, o, are just of a size to allow for a free passage therein of the gum cakes, such cakes being however held from passing down by the inwardly extending opposite flange portions O^2, which form the supports for the gum cakes, and which are spaced apart to form a way for the plungers. To minimize the total push movement of the slide frame and pusher, the flanges do not extend entirely across openings o but stop short at a point somewhat to the rear of the center thereof, see Fig. 2. This construction while reducing the thrust movement, still provides for holding the gum cake in horizontal position even after its front edge passes the said center. At the ends the plate O has apertured ears whereby it can be readily secured in place in the box, and at front at the corners it has upwardly extending flanges P, P, which form lock lugs, against which the lower edge of the door D is fitted, when inserted in place, as will be clearly understood from Fig. 2. Q, indicates a discharge chute formed preferably in cross section of the shape shown in Fig. 2, in which as also in the construction shown in Fig. 1 it extends under all the gum chutes and discharges the gum from any one of them to a single discharge opening in the front of the casing. It will be seen in Fig. 3, that this chute does not extend entirely across the casing, but stops short at the end to make room for the coin receiver which in a double machine, consists of the side members or throats R′, R′, and a transverse member or body R, which connects the members R′. This coin receiver is also formed of tin and is adapted to be inserted through the back wall of the casing, which has a hinged door A^5. The follower weight Z when it reaches the rest P also serves as a lock and prevents the plunger being operated.

From the foregoing it will be seen that all the portions of the coin mechanism which usually require careful and accurate fitting are in the construction shown, produced substantially correct in the several castings and when once fitted together cannot change their relative position, from wear.

Having thus described my invention, what I claim, and desire to secure by Letters Patent, is—

1. A coin operated machine, comprising a main or fixed frame, having a channel or coin passage, and a coin passage thereunder, and a coin abutment, integrally formed therewith, and a lock or tripper pawl pivoted to such main frame, said pawl having a lock member and a trip portion, a slide plate having a pusher member and a coin pocket and a lock portion adapted to engage the lock end of the pawl, said tripper portion of the pawl being projected under the said pocket to form a bottom support for the coin, all substantially as shown and described.

2. A coin operated mechanism comprising a stationary base plate, having a fixed coin

abutment, and a fixed coin receiving channel terminating at the abutment, a lock lever pivoted to such base plate having a trip member or crank-like portion disposed at a point below the abutment, a slide plate having a coin pocket movable under the fixed coin channel and abutment and arranged to form with the pawl crank portion a stop for the coin, said member having a stop portion adapted to engage the lock pawl, all arranged substantially as shown and for the purposes described.

3. In a coin operated vending machine, the combination with a supporting frame, having a coin pocket or channel and an abutment fixedly connected therewith, and a slidable pusher frame, having a coin pocket held on said frame, said pocket arranged to receive the coin from the fixed channel or guide and adapted to move the coin against the abutment, of a lock or trip pawl having a lock portion for holding the pusher from operation and a trip portion adapted to form a back stop and engage the rear edge of the coin and thereby hold the said pusher frame from a backward movement after it has been partially moved toward its thrust or operative movement, substantially as and for the purposes set forth.

4. As an improvement in coin operated machines, the combination with the main plate having a coin channel terminating in an overhanging portion, and formed with a coin abutment, and a pawl pivoted on such frame having a lock member and a trip portion projected in the same direction, said trip member having a coin engaging portion or extension projected above the axis of the pawl, said portion formed with a hold-back member arranged to form a seat for the rear edge of the coin after it has tripped the pawl, and thereby prevent a return or backward movement thereof, and the slidable pusher frame, all substantially as shown and specified.

5. In coin operated machines, a main supporting plate, having integrally formed therewith a coin channel and abutment, and a tripper pawl pivot, a sliding plate having formed therewith a plunger or pusher member, a coin pocket and lock member, a pawl adapted to be held on the main plate pivot, having a lock member and a trip member projected in the direction of the thrust of the pusher, said trip member constructed to form a rest for the coin and back lock, and the spring devices for operating the slide frame, and the pawl, substantially in the manner and for the purpose set forth.

6. In a vending machine, of the kind described, the combination with a casing, a coin operated mechanism at each end, delivery devices, arranged intermediate such coin mechanisms, and a delivery chute arranged under such delivery devices, of a coin box, formed of a main portion, adapted to extend under the delivery chute and having a projecting or throat portion at each end adapted to extend at the ends of the delivery chute under the coin mechanisms, all substantially as shown and described.

7. As an improvement in coin mechanisms for vending machines, a stationary base or supporting plate having a coin channel, a coin abutment and a tripper pawl pivot or pintle member integrally formed therewith, all arranged substantially as shown and described.

In testimony whereof I affix my signature in presence of two witnesses.

FRED G. DIETERICH.

Witnesses:
M. D. BLONDEL,
JAS. A. RYAN.