Oct. 13, 1925.

1,557,250

E. M. GRANDFIELD

SAFETY PLUG

Filed March 30, 1922

Fig. 1.

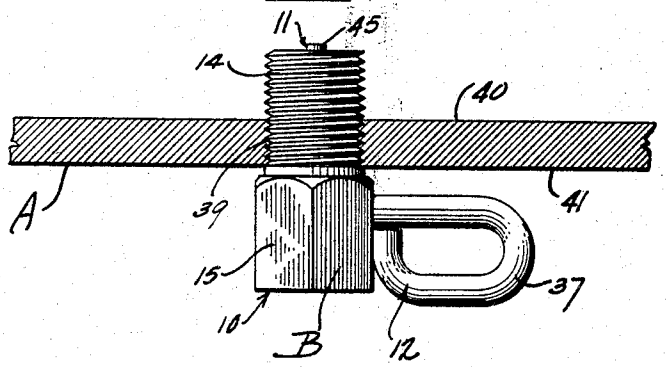

Fig. 2.

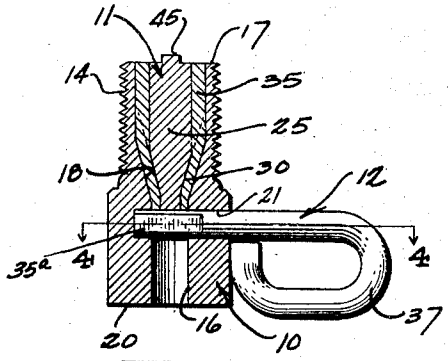

Fig. 3.

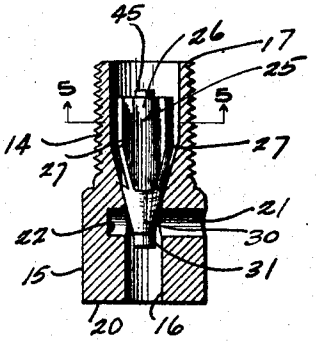

Fig. 4.

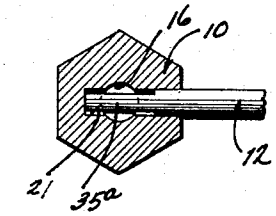

Fig. 5.

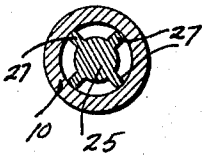

Earl M. Grandfield

Inventor

By Lancaster and Allwine

Attorneys

Patented Oct. 13, 1925. 1,557,250

UNITED STATES PATENT OFFICE.

EARL M. GRANDFIELD, OF BOYNTON, OKLAHOMA.

SAFETY PLUG.

Application filed March 30, 1922. Serial No. 548,140.

To all whom it may concern:

Be it known that I, EARL M. GRANDFIELD, a citizen of the United States, residing at Boynton, in the county of Muskogee and State of Oklahoma, have invented certain new and useful Improvements in Safety Plugs, of which the following is a specification.

This invention relates to improvements in safety plugs for steam boilers.

The primary object of the invention is the provision of a safety plug for steam boilers adapted to have certain portions thereof operate to permit escape of steam into the fire box of a boiler when the latter becomes overheated, said safety plug including a novel arrangement to close the same in facile manner immediately after the same has opened incident to overheating of the boiler to which the same is attached.

A further object of the invention is the provision of a safety plug adapted for use in boilers and the like, for use intermediate a fire box and steam pressure chamber, being normally closed to prevent escape of steam, but including a novel fusible arrangement to permit opening thereof when the boiler becomes overheated; said plug furthermore including a valve arrangement adapted for manual regulation to permit closing of said safety plug as soon as desired, after opening of the same incident to boiler overheating.

A further object of the invention is the provision of a safety plug embodying a casing having a valve member operating therein consisting of a core or body composed of non-fusible material and covered by a coating or jacket of fusible material normally adapted to seal the casing, said safety plug including means for supporting the non-fusible body portion of said valve after the fusible jacket has been melted.

Other objects and advantages will be apparent during the course of the following detailed description.

In the accompanying drawing, forming a part of this specification, and wherein similar reference characters designate corresponding parts throughout the several views,

Figure 1 is a side elevation of the improved safety plug showing the same as attached in the crown plate of a boiler.

Figure 2 is a transverse cross sectional view taken through the safety plug and showing the cooperating parts thereof as they appear when inserted in a boiler operating under normal circumstances.

Figure 3 is a cross sectional view taken through the improved safety plug, showing the manner in which the same may be regulated to permit operation of a boiler in which the same is inserted under abnormal conditions.

Figure 4 is a cross sectional view taken substantially on the line 4—4 of Figure 2.

Figure 5 is a transverse cross sectional view taken substantially on the line 5—5 of Figure 3.

In the drawing, wherein for the purpose of illustration is shown the preferred embodiment of my invention, the letter A designates the casing, crown plate of a boiler, or similar structure in which it is desired to use the improved safety plug B. The safety plug B preferably comprises a casing portion 10, valve member 11, and regulating pin 12.

The casing 10 is preferably formed of some non-fusible metal, provided with the screw threaded shank portion 14 upon one end thereof, and a polygonal shaped wrench head 15 upon the other end thereof. This casing 10 is provided with a passageway 16 extending longitudinally therethrough; said passageway being of relatively large diameter inwardly from the end 17 of the shank 14, and converging from the portion of relatively large diameter to provide a tapered seat 18 interiorly of the casing 10, and being of relatively small diameter from the tapered seat 18 toward the other end 20 of the casing 10. A transverse passageway 21, preferably of uniform diameter, is provided inwardly from a side of the casing 10 extending radially of the passageway 16 and intersecting the same. This passageway 21 terminates in a dead end 22, within the casing 10, although the passageway 21 is of sufficient length to intersect the smaller part of the longitudinal passageway 16 adjacent the tapered seat 18.

The valve member 11 is of novel formation, and includes a body portion 25 of some non-fusible material, such as steel. This body 25 is preferably of solid formation, including a cylindrical portion 26 having spaced grids or flanges 27 extending radially thereof. An end 30 of the non-fusible portion 25 is tapered, in converging manner outwardly from the cylindrical portion 26, said taper-

ing portion 30 extending to a forward end portion 31 of disc shaped formation. This tapered portion 30 as well as the grids 27 adjacent the same are properly bevelled or tapered to conform to the taper of the casing seat 18. The spaces intermediate the grids or flanges 27 are to be filled with a fusible material 35, such as bismuth, lead, tin or Babbitt metal; said fusible metal 35 being so provided about the tapered portion 30 of the valve member 11 as to entirely encase the same. The top and bottom of the non-fusible body 25 are not covered with the fusible material 35. It is obvious that the fusible material 35 will be securely anchored in position as a part of the valve 11, due to the fact that the grids 27 effectively grip the same to securely maintain it in proper position.

The regulating pin 12 is adapted for insertion in the radial passageway 21 of the casing 20, having the forward end 35^a thereof flattened, whereby when said end 35 is in the passageway 21, it will not obstruct the axial passageway 16. This end 35^a, is, however, so flattened as to provide opposite arcuate portions in contact with the passageway 21, whereby said pin 12 will snugly fit in said passageway 21, yet providing sufficient clearance to permit material to flow through the axial passageway 16 as will be hereinafter more specifically set forth. The looped end 37 is provided upon the pin 12, which is relatively large, so that said pin 12 may be taken hold of in various ways and under difficult circumstances to effect a removal of the same from the casing 10.

In assembling the improved safety plug B, the pin 12 is first placed in its socket or passageway 21, substantially as is illustrated in Figure 2 of the drawing. The valve member 11 is next disposed in the axial passageway 16 of the casing 10 and it can readily be seen that the fusible material 35 thereupon, is in snug engagement with the walls of the passageway 16, seating itself upon the tapered part 18 of the passageway 16, and consequently sealing said passageway 16 against flow of material therethrough.

The safety plug B is applied to the boiler A in the well known manner, whereby the screw threaded shank end 14 is inserted through a screw threaded opening 39 to extend beyond the water side 40 of the boiler casing A. In this position, the polygonal head portion 15 is within the fire box 41. The looped end 37 of the safety plug B preferably faces the door or either side of the fire box (not shown) in which the same is positioned, whereby an operator may readily grasp the regulating pin 12 in any appropriate manner. The purpose for which the safety plugs B are provided, is well understood by those skilled in the art. Should overheating occur, in the boiler A in any manner, such as by shortening of water, the fusible material 35 within the casing 10 will melt and drop from the non-fusible portion 25 of the valve member 11. Steam, under such circumstances will then flow through the passageway 16 into the fire box of the boiler to put out a fire therein. It is obvious that this result may be attained by the improved safety plug, due to the fact that the valve end 31 thereof normally rests upon the end 35^a of the regulating pin, so that should the fusible material 35 melt, under overheated condition, the body 25 will be supported upon the end 35 of the pin to permit the steam to flow through the spaces intermediate the grids 27, past the seat 18 of the casing, and outwardly through the reduced end of the axial passageway 16 into the fire box.

With the fusing of ordinary safety plugs, steam will release from the boiler, without means of control until the entire boiler is exhausted of steam; it being necessary to then cool the boiler in order to replace the fused portion of the plug. However, by removal of the regulating pin 12, the boiler operator may place the boiler A in condition for continued use, without the necessity of replacing the fused material of the safety plug. After the pin 12 has been withdrawn from its passageway 21, the non-fusible portion 25 of the member 11 will drop or be forced by steam pressure into the passageway 16, whereby the tapered portion 30 thereof securely engages the tapered seat 18 in order to entirely seal the passageway 16 against flow of steam therethrough into the fire box. Such position of the portion 25 within the casing 10 is illustrated in Figure 3. It is to be noted that the portion 25 of the valve 11 notwithstanding the fact that the same is normally adapted for use with the fusible element 35, serves as a valve in itself, and may be effectively guided within the passageway 16 due to the fact that the longitudinal edges of the grids 27 normally contact the inside circumference of the enlarged diametered portion of the passageway 16.

A relatively shallow projecting end 45 may be provided upon the portion 25 of the valve member 11, opposite to the disc end 31, in order to facilitate handling of the nonfusible portion 25.

From the foregoing, it can be seen that a safety plug for steam boilers has been provided, which while extremely simple and compact, yet affords means whereby a boiler may be quickly placed in condition for reuse, after the same has dangerously overheated so as to fuse the safety plugs therein. By removal of the pin 12, the non-fusible portion 25 of the valve member 11 will seal the passageway 16 as above described, whereby the residue of steam within the boiler A

may be maintained in order to provide a pressure therein, which might be necessary to refill the same with water. Generally, a safety plug will fuse or melt at the most inconvenient time, necessitating the cut off of power. However, by releasing the pins 12, the valve portions 25, after the fusing of the material 35 therefrom, will automatically seat, due either to gravity or steam pressure, so that the boiler A is in fit condition for continued use. The safety plugs B may then be attended to at any convenient time.

Various changes in the shape, size and arrangement of parts may be made to the form of the invention herein shown and described, without departing from the spirit of the invention or the scope of the claims.

I claim:

1. As an article of manufacture, a safety plug comprising a tubular body having an internal valve seat, a valve member slidable in the tubular passage in said body and comprising a core of non-fusible material having spaced laterally disposed extensions normally sealing said passage projecting from its sides for engaging the walls of the passage and retaining the core centered in the passage, said core having a valve head forming portion for seating upon the valve seat, fusible material upon said core about the valve head and intermediate said lateral extensions, and removable means for retaining the core in a raised position out of engagement with the valve seat when the fusible material is melted.

2. As an article of manufacture, a safety plug comprising a hollow body having a tapered portion forming a valve seat, a core portion of non-fusible metal slidable in the hollow body towards and away from the valve seat and having longitudinal grids provided outwardly thereon in spaced relation for engaging the walls of the hollow body above the valve seat, said grids and metal body being tapered upon one end to fit the valve seat, a fusible metal enclosed entirely about the tapered end of said core and filled intermediate the grids, said fusible metal normally sealing the port, and means removably carried by said hollow body for engaging the inner end of the core and retaining the same out of engagement with the valve seat and centered in the hollow body by said grids when the fusible material is melted.

3. A safety plug comprising a casing having a passageway therein including a valve seat, a valve member for said casing including a body of non-fusible material having a tapered end portion and a jacket of fusible material, said valve member being normally seated in the passageway of said casing and resting upon the valve seat to seal the passageway, and detachable means upon the casing for supporting said non-fusible body of the valve to hold the body out of engagement with the valve seat and leave the passageway open, when the jacket of fusible material is melted, the tapered portion of the valve body being adapted to move into engagement with the valve seat of the casing passageway and seal the passageway when the detachable means is removed.

4. A safety plug comprising a casing having a passageway therethrough including a valve seat, a valve member including a non-fusible body and a covering of fusible material normally resting upon the valve seat to seal the passageway of the casing, and a detachable pin adapted for supporting the valve member after melting of the fusible means to hold the passageway open.

5. A safety plug comprising a casing provided with a passageway therethrough including a valve seat, a valve of non-fusible material having a valve seat engaging portion and a coating of fusible material for the valve seat engaging portion of said valve, and a pin slidably mounted in the casing radially of the passageway therein adapted to engage the inner end of said valve after melting of the fusible coating, whereby the passageway of said casing may be maintained open, said pin when removed permitting the valve to drop in said passageway and the valve seat engaging portion thereof engage with the valve seat to seal the passageway.

6. A safety plug comprising a casing provided with a longitudinal passageway therethrough, and having a radial passageway intersecting said longitudinal passageway, a valve member, fusible means supporting said valve member to seal the passageway in said casing upwardly of the radial passageway therein, a pin having an end extending through said radial passageway to partially occupy the longitudinal passageway in said casing, whereby upon melting of the fusible material the valve may rest upon the portion of said pin extending into said longitudinal passageway for holding the same in suspended relation, said pin being movable in the radial passage out of the longitudinal passage, whereby said casing to permit removal thereof, whereby said valve may drop into position for sealing the longitudinal passageway in the casing.

7. A safety plug comprising a casing having a screw threaded shank portion upon one end and a wrench engaging portion upon the other end, said casing having a passageway longitudinally therethrough of enlarged diameter inwardly from the screw threaded shank converging inwardly of the casing to provide a tapered seat and having a constricted outlet through the wrench engaging end, said casing having a transverse

opening therein intersecting the passageway therethrough, terminating in a dead end within said casing and being positioned adjacent the wrench engaging portion, a valve member disposed within said casing from the enlarged end of said passageway, a fusible material intermediate the valve and the tapered seat of said casing to normally seal the passageway, and a detachable pin member disposed in the transverse opening of the casing to have a portion thereof extending into the passageway thereof, whereby upon melting of the fusible material said valve member will rest upon said pin upwardly from the tapered seat to permit flow of material through the casing, said pin when removed permitting the valve to drop for sealing the passageway.

8. A safety plug comprising a casing having a boiler inserting end and provided with a passageway longitudinally therethrough of enlarged diameter inwardly from the boiler inserting end to provide a tapered seat inwardly thereof, said casing having a radial passageway therein intersecting the longitudinal passageway at a point remote from the boiler inserting end of said casing, a valve member formed of a nonfusible core having a series of grids radially provided in longitudinal manner therein and having one end thereof tapered in converging manner, a fusible material about said tapered end of the non-fusible portion and in the spacing intermediate the grids thereon to provide a member for seating upon the tapered portion of said tapered passageway to normally seal the latter, and a detachable retaining pin having one end thereof flattened and adapted for inserting in the radial passageway of the casing to intersect the longitudinal passageway therein, whereby the same partially occupies said longitudinal passageway so that when the fusible material upon said valve member melts, the core thereof may be supported upon the inserting portion of said pin to permit the longitudinal passageway to be opened for passing of material therethrough, said pin having the outer end thereof looped in elongated manner to permit detachment from the casing.

EARL M. GRANDFIELD.