July 23, 1935. G. H. LITTLE 2,008,870

DEFECTIVE PACKAGE EJECTOR FOR CIGARETTE PACKAGING MACHINES

Original Filed June 28, 1930

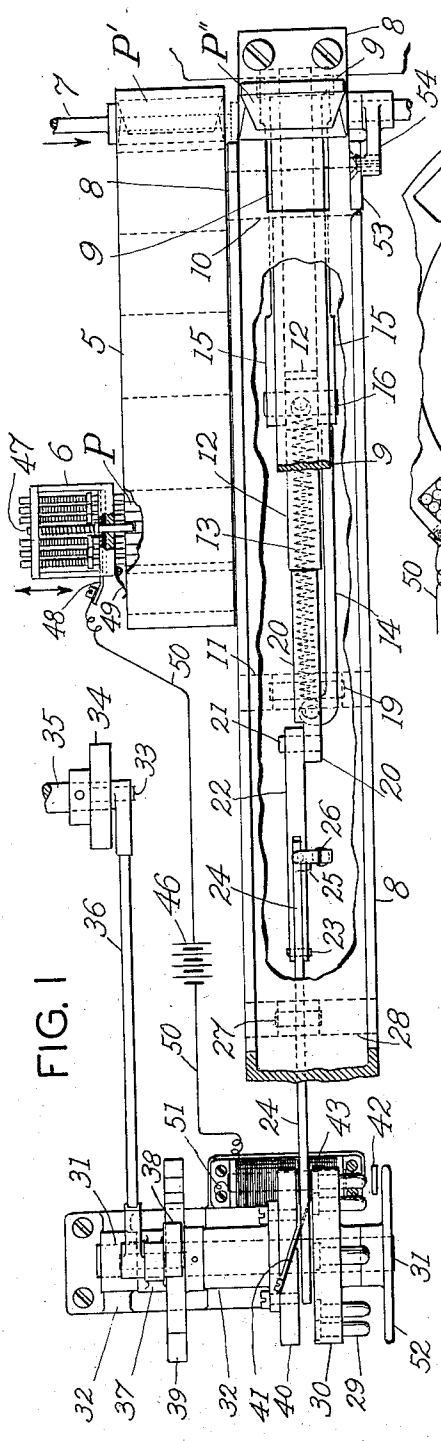

FIG. 1

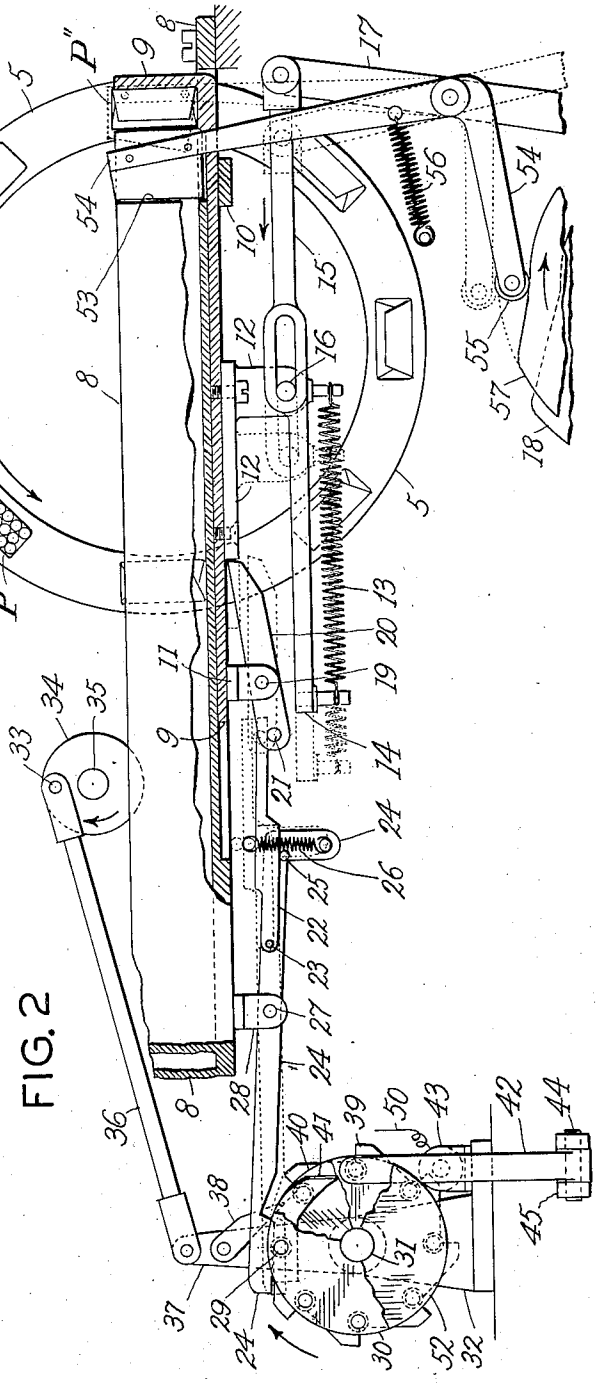

FIG. 2

INVENTOR
George H. Little
BY
Sydney D. Prescott
ATTORNEY

Patented July 23, 1935

2,008,870

UNITED STATES PATENT OFFICE

2,008,870

DEFECTIVE PACKAGE EJECTOR FOR CIGARETTE PACKAGING MACHINES

George H. Little, Winston-Salem, N. C., assignor to R. J. Reynolds Tobacco Company, a corporation of New Jersey

Application June 28, 1930, Serial No. 464,455
Renewed December 20, 1932

9 Claims. (Cl. 209—80)

This invention relates to an improvement in packaging machines, and particularly to cigarette packaging machines, its main object being to separate the defective packages from the perfect packages automatically. With these and other objects not specifically mentioned in view, the invention consists in certain constructions and combinations which will be hereinafter fully described and then specifically set forth in the claims hereunto appended.

In cigarette packaging machines, it has heretofore been customary to automatically examine the packages for short or missing cigarettes, before the end fold of the package is made in the turret, by means of a feeling device which closes an electric circuit when the examined package contains one or more defective cigarettes, the electric current so established causing the faulty package to be marked by a daub, as shown in the patent to Arelt et al., Package-inspection device, No. 1,682,464, August 28, 1928. This arrangement makes it necessary to remove the daubed packages by hand after they have been discharged from the turret into the delivery pathway, and therefore requires the attention of an operator.

With the object of eliminating this disadvantage, the device described in the present application is so arranged that the electric current established by the contact in the feeler due to an imperfect package, energizes an electromagnet which, by the attraction of its armature, causes the movement of a lever which, in turn, raises a gravity controlled pawl so that the latter momentarily locks the pusher producing the advance of the packages causing the defective package to remain in the path of the next package ejected from the turret, which thus is made to eject the defective package out of the delivery pathway.

In the accompanying drawing which forms a part of this specification and in which like characters of reference refer to the same or like parts:

Fig. 1 is a top view of a cigarette packaging machine turret and delivery pathway equipped with the improved ejecting device, and

Fig. 2 is an elevation of the mechanism shown in Fig. 1.

In carrying the invention into effect, there is provided means for advancing packages, a package inspecting device, and mechanism controlled by said device to cause ejection of defective packages from said advancing means. In the best constructions contemplated, the advancing means includes a rotary turret having the inspecting device disposed at one station thereof, a pathway receiving the packages from another station of the turret, a plunger discharging packages from said turret on to said pathway, and a pusher advancing the packages along said pathway. In the best constructions, also, said mechanism includes a pivoted stop controlled by said inspecting device to lock the pusher when the defective package is discharged on the pathway, so that when the next package is discharged from the turret, it will eject the defective package from the pathway. The means above referred to may be widely varied in construction within the scope of the claims, for the particular machine selected to illustrate the invention is but one of many possible embodiments of the same. The invention, therefore is not to be restricted to the precise details of the structure shown and described.

Referring to the drawing, 5 is the turret of a cigarette packaging machine in which the package P, the ends of which are still open, is examined by the inspecting device 6 when in a position of the turret five steps removed from the delivery position in which the plunger 7 pushes the finished package P'' into the delivery pathway 8. The latter, at its receiving end, has the reciprocating pusher 9 which starts each package as received from the turret on its way toward the delivery end, thereby pushing all the packages contained in the pathway by one step at every forward stroke. The pusher 9 rests on the cross bars 10 and 11 which are suitably attached to the bottom of the pathway, and has fastened thereto the bracket 12 which is pulled forward by the spring 13 attached to the extension arm 14 of a slotted lever 15 engaging with a pin 16 in bracket 12 and actuated by a pivoted cam lever 17 controlled by a cam 18 so that the spring 13 can pull the pusher 9 toward the delivery end of the pathway in the forward position of lever 15.

On a pin 19, carried by cross bar 11, is pivoted a pawl or stop 20, the heavy forward portion of which is normally in its down position so that a horizontal pin 21 attached to the outer end of its rear portion is normally held in its up position. On the pin 21 rests the end of a finger 22, the forward end of which, by means of pin 23, is pivoted to a double arm lever 24 on which it is held against a stop 25 by a spring 26. The lever 24 is pivoted on pin 27, carried by bracket 28 attached to the bottom of pathway 8 in such a manner that its free end extends into the path of a number of movable horizontal pins 29 slidably supported in a rotating disk 30 mounted on a horizontal shaft 31 supported in a pedestal 32.

The ends of the pins normally project beyond the outer face of the disk 30 so that they may be horizontally displaced as hereinafter described. There are as many pins 29 in the disk 30 as there are pockets in turret 5, and the disk 30 is intermittently rotated in synchronism with the turret by means of a crank pin 33 in disk 34 on shaft 35 which, by rod 36, rocks a lever 37, loosely mounted on the shaft 31 and carrying the pawl 38 engaging the ratchet 39, which is fastened to shaft 31. To pedestal 32 is fixedly attached, concentric with shaft 31, a disk 40 provided with an oblique slot in which is fastened a leaf-spring 41, the outer end of which extends diagonally across the space between disks 30 and 40 and underlies the free end of lever 24.

The ends of the pins are engaged and horizontally displaced by the armature 42 of electromagnet 43 whenever the former, which is pivoted on the horizontal pin 44 in bracket 45, is attracted by the latter which occurs each time the circuit of battery 46 is closed by one of the feeler-pins 47 of inspecting device 6 which are spring pressed into contact with the insulated contact strip 48 whenever the package contains one or more defective cigarettes, the return circuit being by way of the machine frame through spring contact 49 from the inspecting device, one end of the magnet coil 43 being connected by wire 50 through the battery 46 to the contact strip 48 while the other end is grounded to the machine frame by connection 51. The pins 29 are guarded against accidental displacement by a disk 52 mounted on the end of shaft 31.

The outer side wall of pathway 8 opposite the discharging pocket of turret 5 is formed by the movable shutter 53 mounted on cam lever 54, which is fulcrumed on the pivot of the lever 17, the roller 55 of which is held by spring 56 against cam 57 which is so timed that the shutter 53 is moved in such manner to prevent the perfect packs from being thrown out of the pathway, by swinging to a position blocking the discharged packages each time shortly before the plunger ends its forward stroke.

The operation of the device is as follows:

When the package P under examination contains one or more short cigarettes or has a cigarette missing, one or more of the feeling fingers 47, upon the forward motion of the inspection device 6, will penetrate into the package, thereby closing the electric circuit of the battery 46 and energizing the electromagnet 43. The latter thus will attract its armature 42, thereby pushing one of the pins 29 into the space between disks 30 and 40. The pin so displaced, upon traveling six steps around shaft 31 with disk 30, comes into contact with and raises the projecting end of lever 24 at the time when the package P, after five steps of the turret 5, has been delivered into pathway 8 at P'', and the next following package P', after the sixth step, is about to be discharged by the plunger 7. Ordinarily, the motion of lever 17 at that time causes the pusher 9 to move the last package P'' forward in the delivery pathway, thereby advancing all the packages in the pathway. But, in the case of a defective package, the raising of lever 24 by the then displaced pin 29 causes the pawl 20 to be turned from its normal dotted position into the full line position shown in Fig. 2, thereby resting on the horizontal extension of bracket 12 while the pusher 9 performs its return stroke from the preceding package, and snapped into the position shown by the action of spring 26, upon the completion of the stroke, thus locking the pusher against forward motion so that the package P'' remains in its delivered position and is ejected through the then open wall of the chute by the next package P' when the latter is discharged from the turret by the plunger 7. Upon the next following step, the displaced pin 29 engages with the spring 51 which pushes it back into its normal position in disk 30, in which position all pins remain as long as only perfect packages are encountered by the inspection device.

What is claimed is:

1. The combination with means for advancing packages, of a package inspecting device cooperating with said means for detecting defective packages, and mechanism controlled by said inspecting device to cause ejection of defective packages from said advancing means, said means including a rotary turret having said device disposed adjacent one station thereof to detect defective packages, a pathway, and a pusher advancing packages along said pathway, and said mechanism including an ejector arranged to discharge the packages from another station of said turret on said pathway, and a stop arranged to lock the pusher when a defective package is discharged on said pathway.

2. The combination with means for advancing packages, of mechanism arranged to cause ejection of defective packages from said advancing means, said means including a pathway and a pusher advancing the packages along said pathway and said mechanism including a pivoted stop arranged to lock the pusher, a lever controlling said stop, an intermittently rotating disk, axially displaceable pins mounted in said disk to actuate said lever to move the stop locking position when one of the pins is in displaced position, and an electrical device operable when said inspecting device detects a defective package to move one of said pins into displaced position.

3. The combination with means for advancing cigarette packages, of a package inspecting device arranged to enter one end of the packages in said means to detect packages having short or missing cigarettes, and mechanism controlled by said device to cause said means to eject packages having short or missing cigarettes, said means including a pathway, a pusher provided with an outstanding pin and adapted to advance packages along said pathway, a slotted reciprocating lever having said pin disposed in its slot, and a spring connected to said lever and pusher, and said mechanism including a stop adapted to engage said pusher to prevent advancing movement thereof.

4. The combination with means for advancing cigarette packages, of a package inspecting device arranged to enter one end of the packages in said means to detect packages having short or missing cigarettes, and mechanism controlled by said device to cause said means to eject packages having short or missing cigarettes, said means including a rotating turret, a reciprocating plunger adapted to discharge the packages from said turret on its forward stroke, a pathway to receive the discharged packages, and a cam operated shutter timed to move into position to block the discharged package shortly before the end of the forward stroke of said plunger.

5. The combination with means for advancing cigarette packages, of a package inspecting device arranged to enter one end of the packages in said means to detect packages having short or missing cigarettes, said means including a rotat-

ing turret adjacent one station of which said device is arranged, a pathway arranged to receive packages discharged by said turret, a plunger adapted to discharge the packages from another station of said turret onto said pathway and a pusher adapted to advance packages along said pathway.

6. The combination with means for advancing packages, of mechanism to cause said means to eject packages, said means including a rotating turret, a plunger adapted to discharge the packages from said turret, a pathway to receive the discharged packages, and a pusher adapted to advance the packages along said pathway, and said mechanism including a stop adapted to lock said pusher against advancing movement, whereby to stop the defective package in the path of the following packages while latter is discharged from said turret and cause the defective package to be ejected from said pathway.

7. The combination with means for advancing groups of cigarettes, of a corresponding group of independently movable feelers engaging cigarettes in said means, and interposed mechanism actuated by abnormal movement of any one of said feelers due to a defective group to cause said means to eject said defective group, said means including a rotary turret, a plunger adapted to discharge the groups from said turret, a pathway to receive the discharged groups, and a pusher adapted to push the groups along said pathway, and said mechanism including a stop adapted to engage said pusher to prevent advancing movement thereof.

8. The combination with means for advancing groups of articles, of an inspecting device associated with said means and including a corresponding group of independently movable feelers for engaging said articles, and mechanism actuated only by abnormal movement of one or more of said feelers when in engagement with a defective group to cause said means to eject the defective group of articles as a unit, said means including a rotary turret, a plunger adapted to discharge the groups from said turret, a pathway to receive the discharged groups and a pusher adapted to push the groups along said pathway, and said mechanism including a stop actuated by said device to engage said pusher to prevent advancing movement thereof.

9. The combination with means for advancing cigarette packages, of a package inspecting device arranged to enter one end of the packages in said means to detect packages having short or missing cigarettes, said means including a rotating turret adjacent one station of which said device is arranged, a pathway arranged to receive packages discharged by said turret, a plunger adapted to discharge the packages from another station of said turret onto said pathway and a pusher adapted to advance packages along said pathway, and means controlled by said device and cooperating with said pathway and plunger to cause ejection of defective packages from said pathway.

GEORGE H. LITTLE.